1

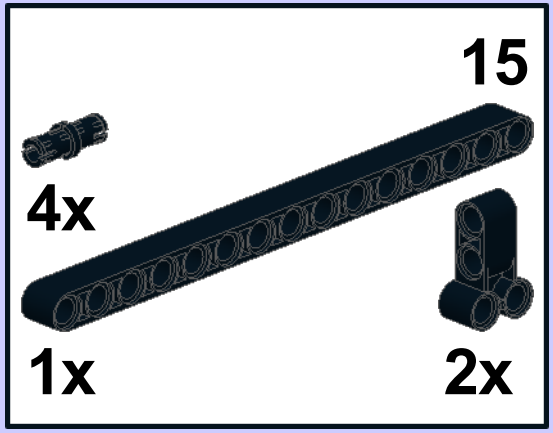


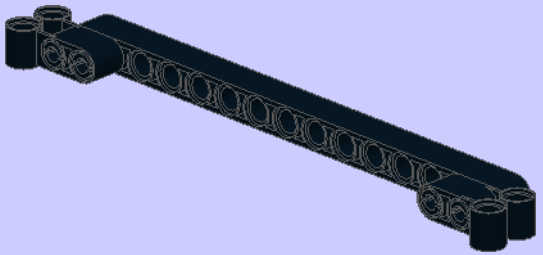

2

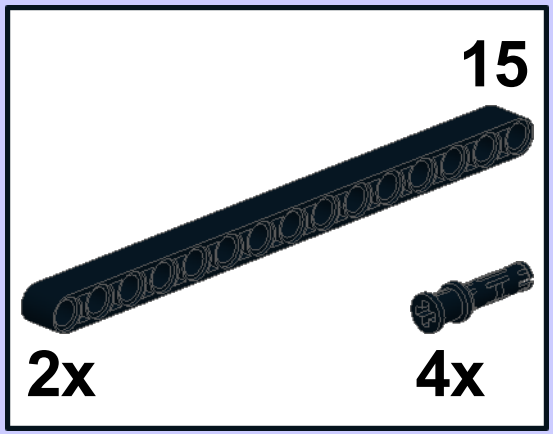


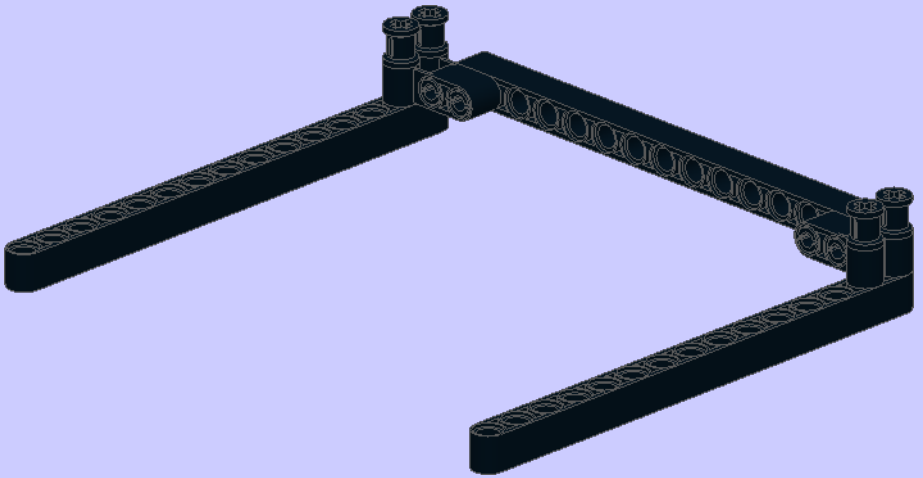

3

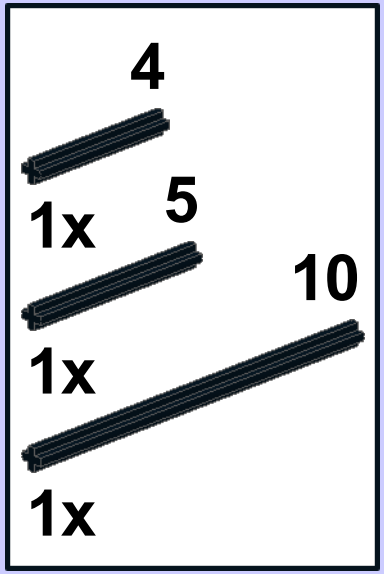


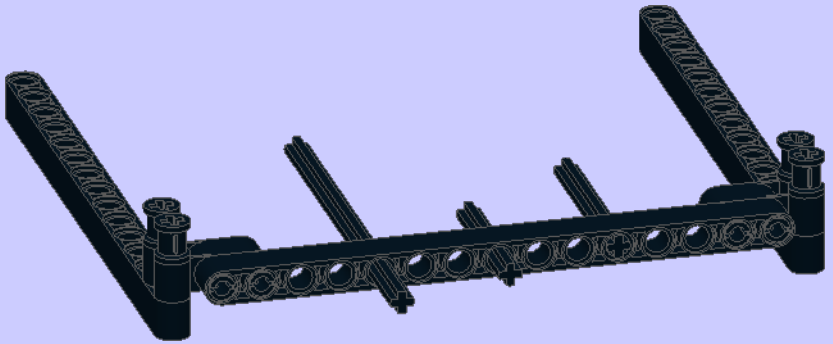

**4**

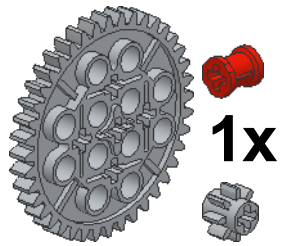


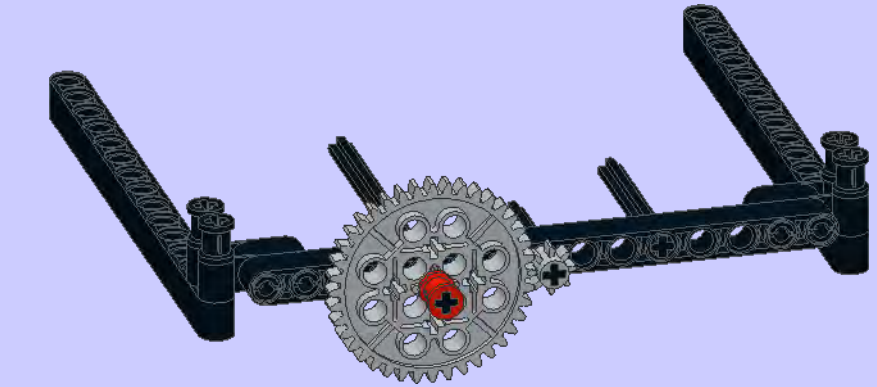

**5**

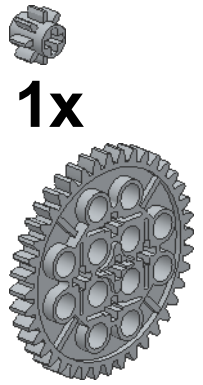


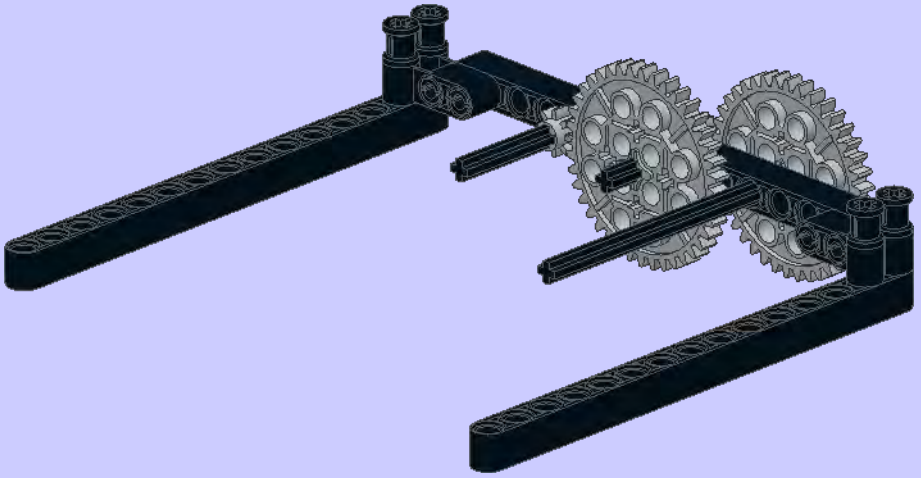

**6**

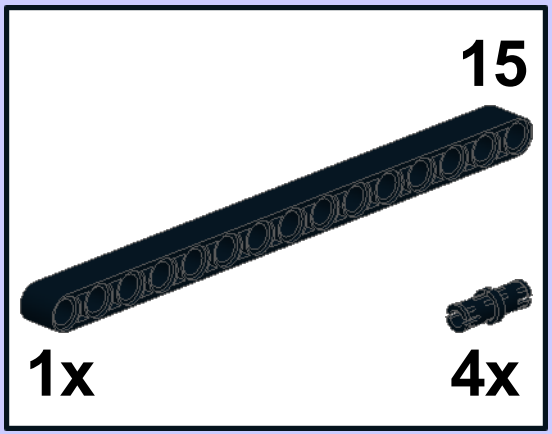


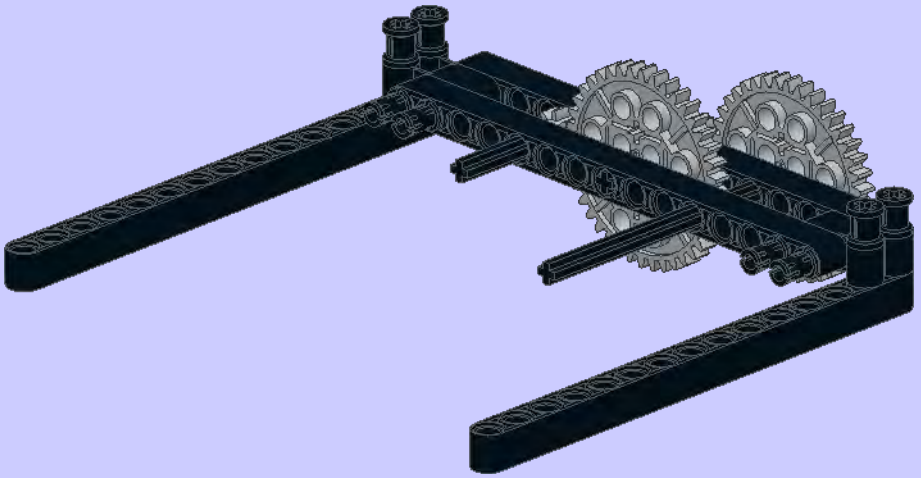

7

2x

4x

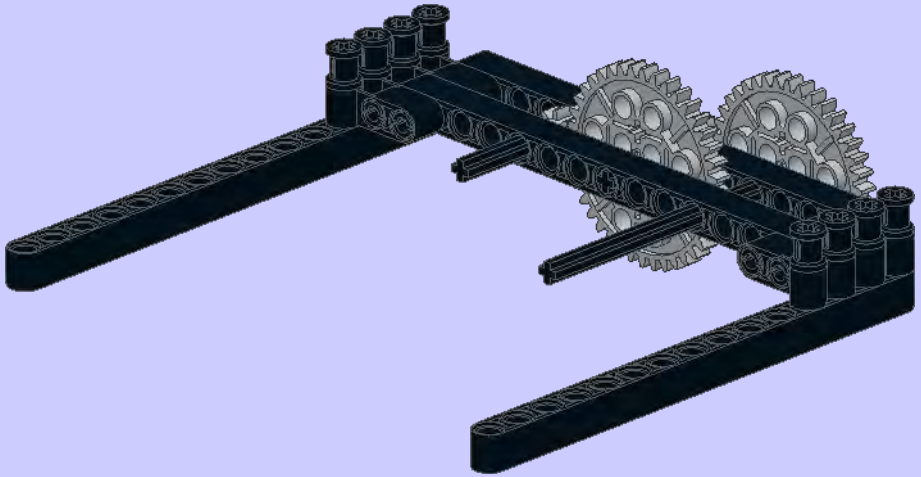

8

2x

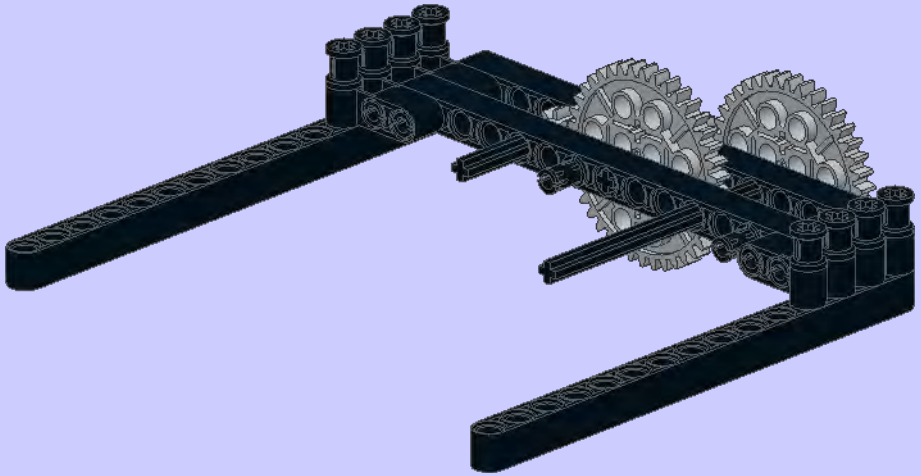

9

7

1x

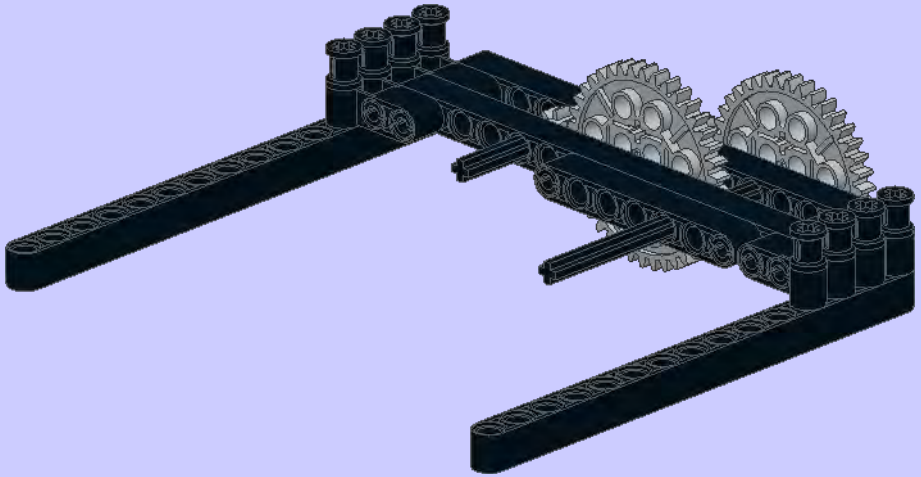

10

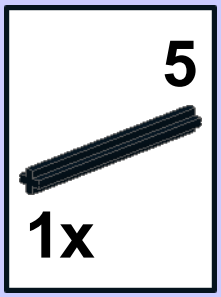


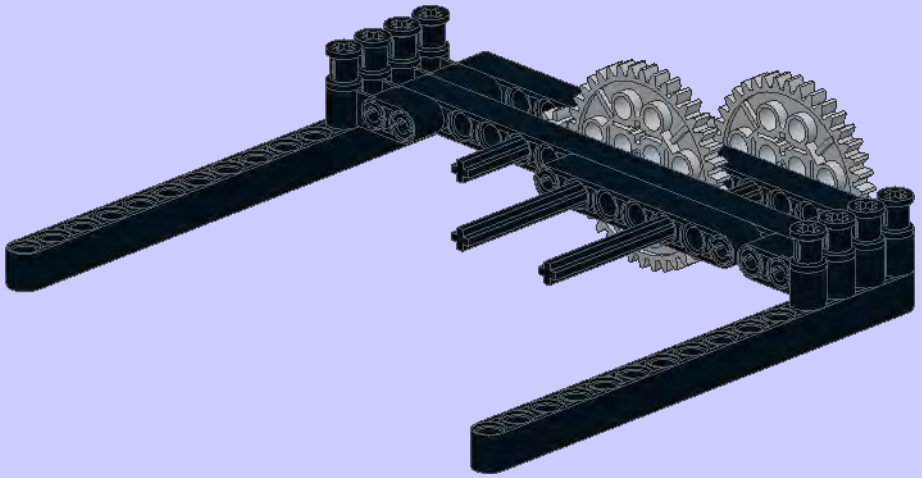

11

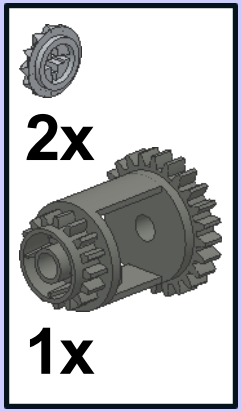


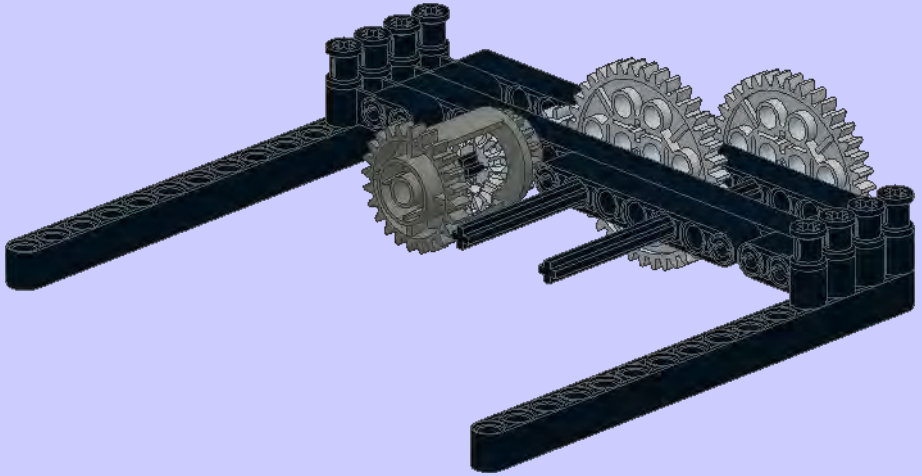

12

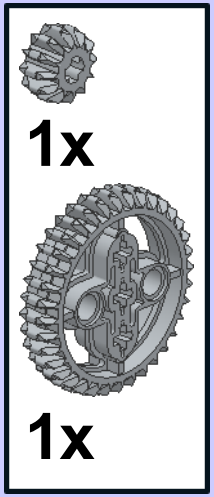


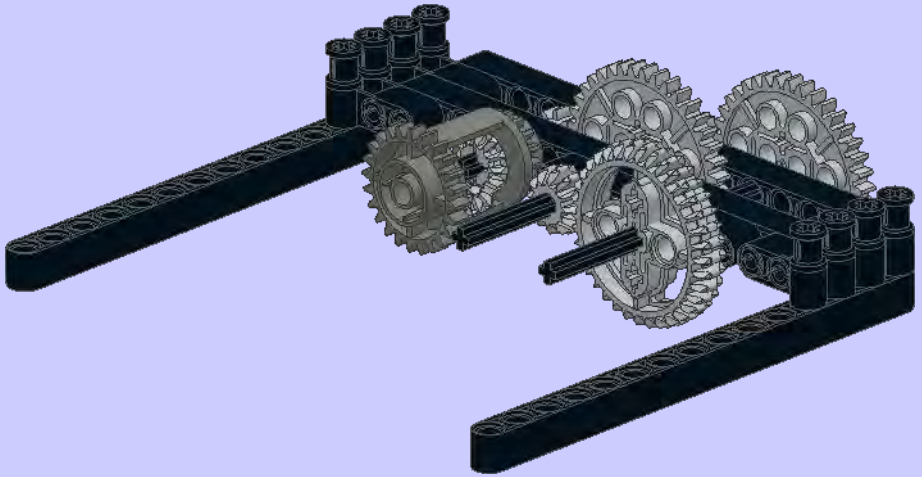

**13**

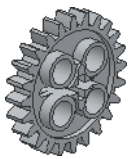

1x

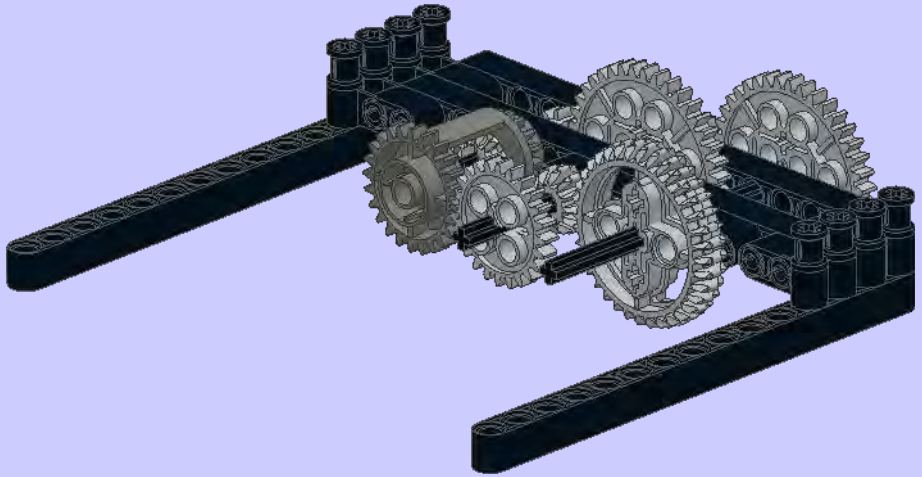

**14**

15

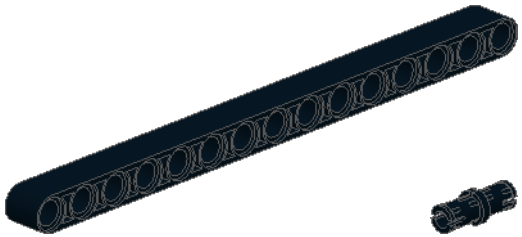



1x

4x

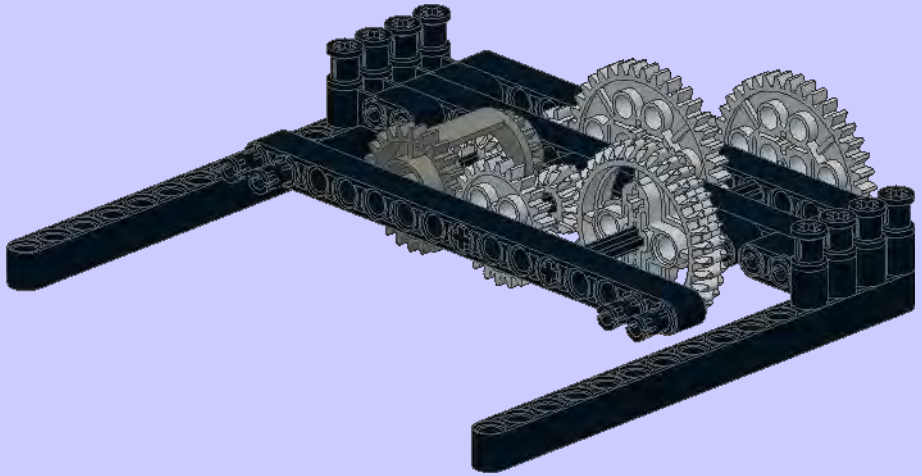

**15**

2x

4x

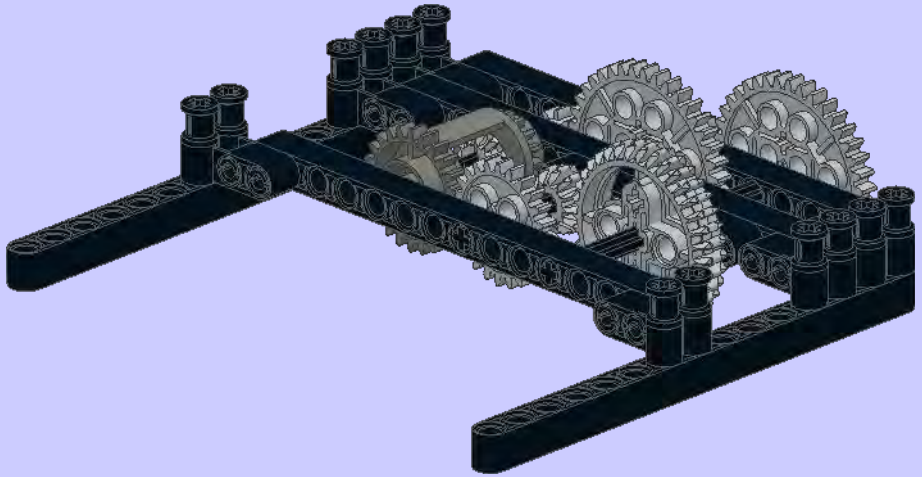

16

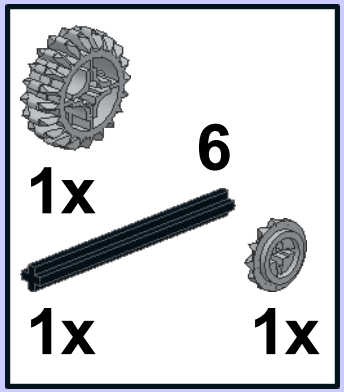


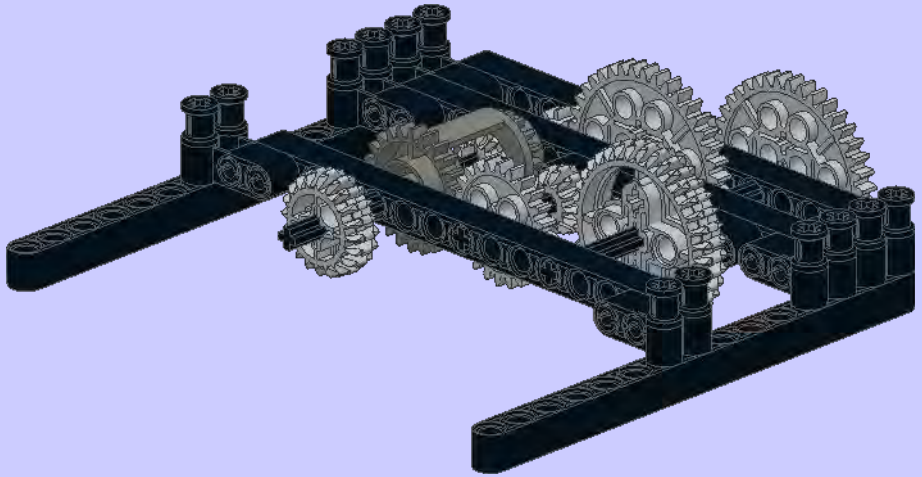

17

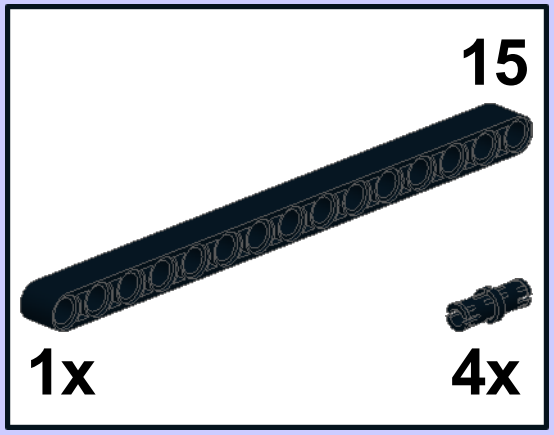


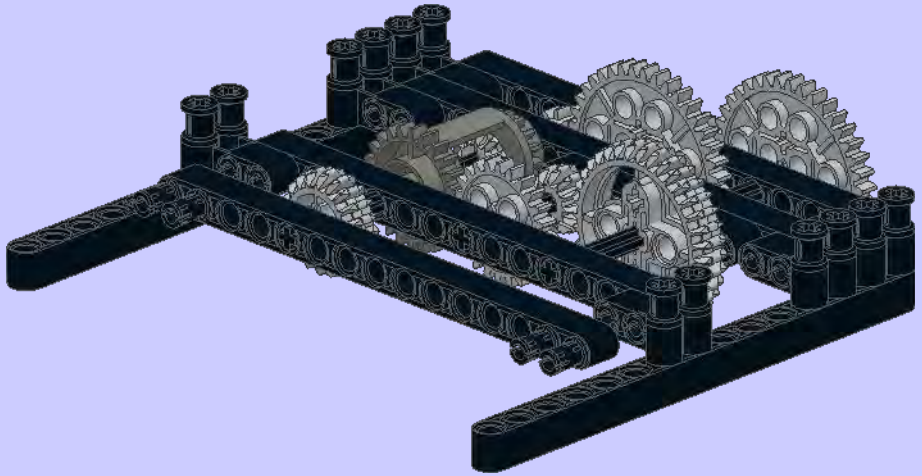

18

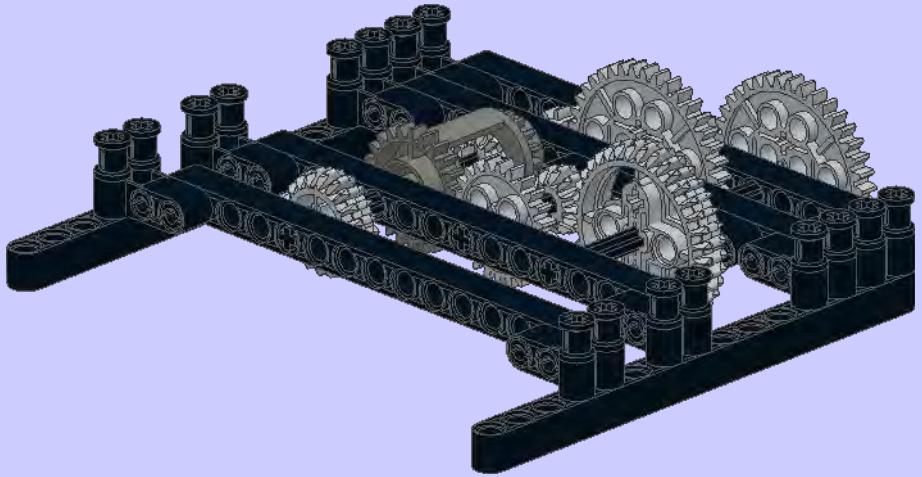

**19**

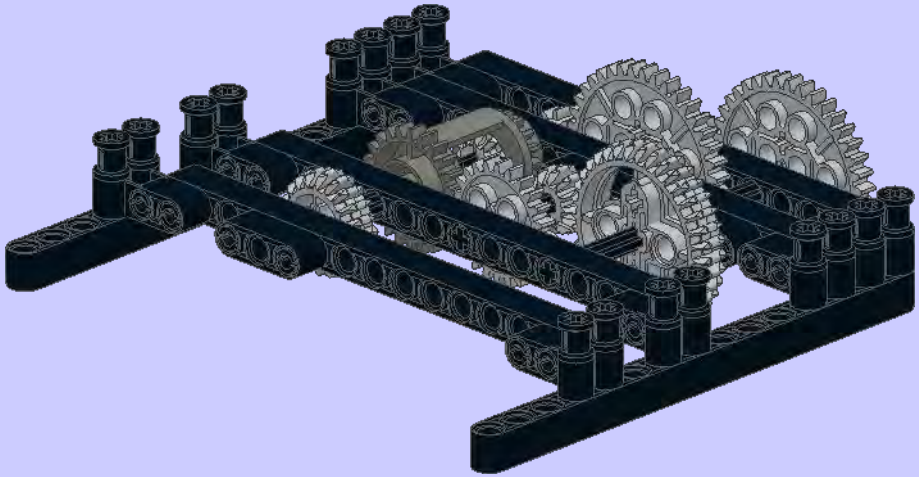

**20**

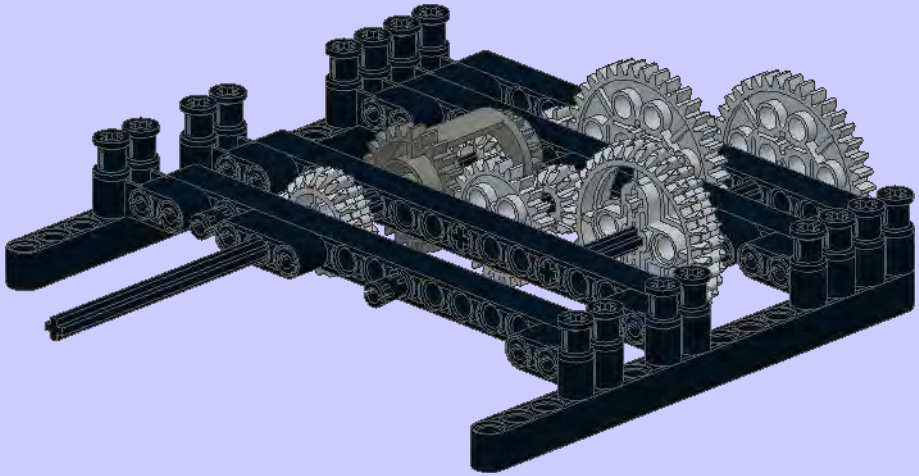

**21**

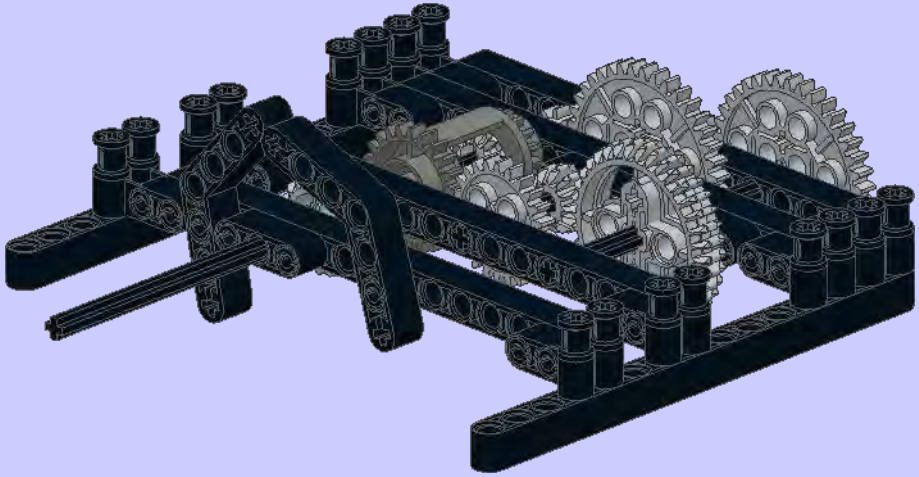

**22**

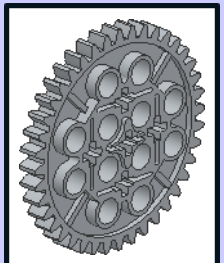

1x

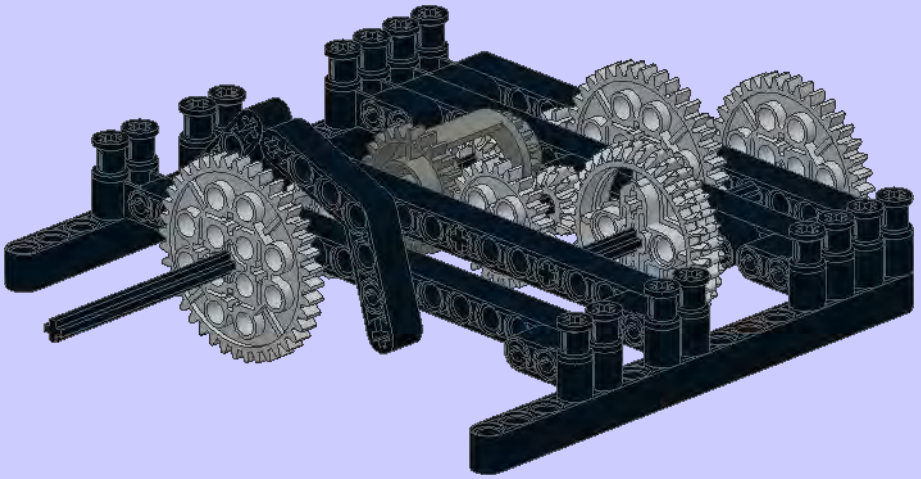

**23**

2x

1x

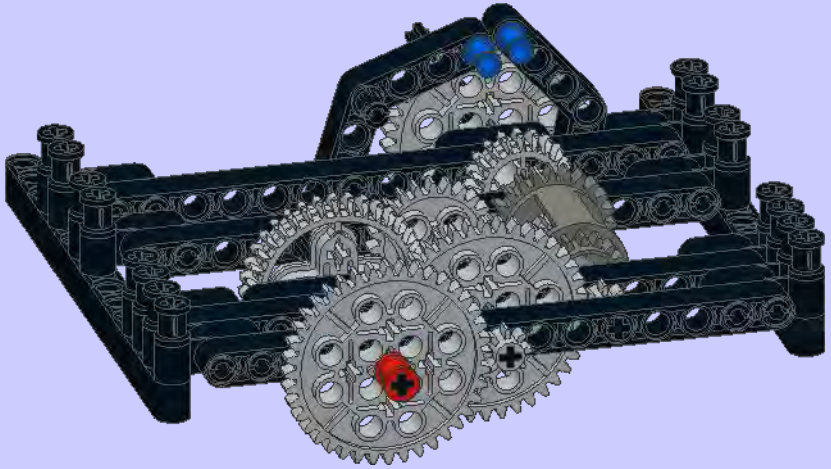

**24**

5

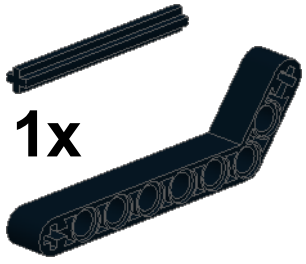

1x

1x

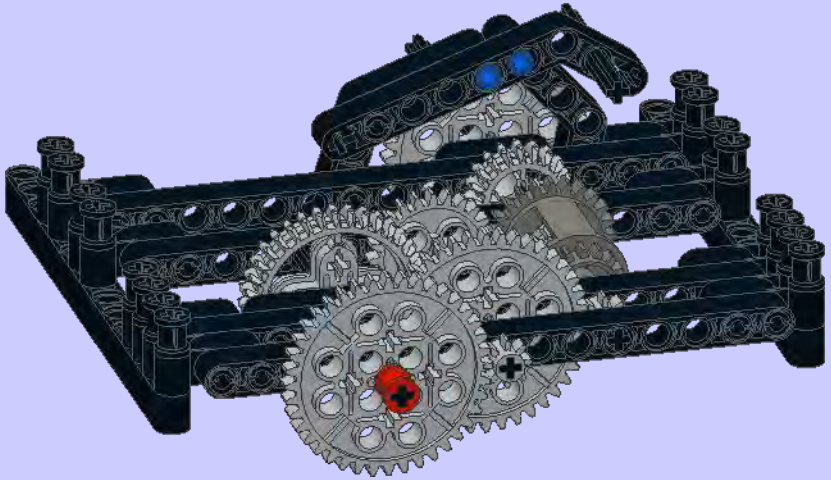

25

1x

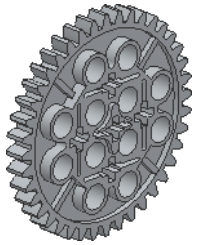

1x

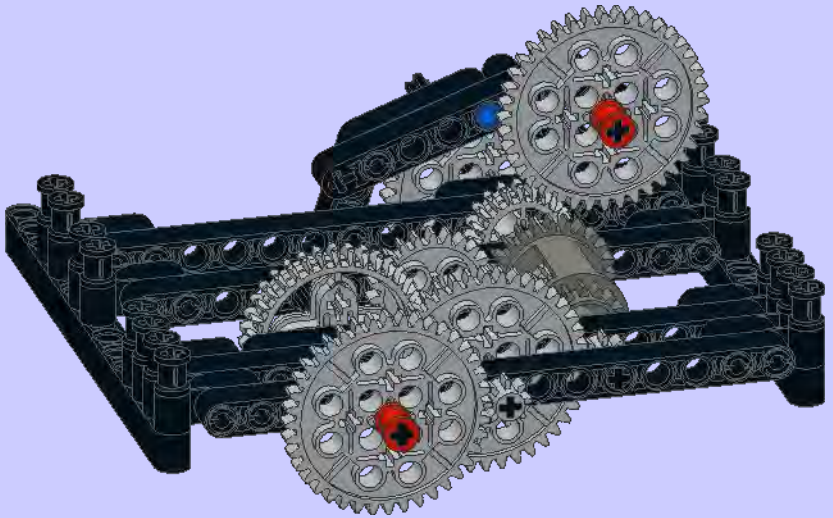

26

1x

1x

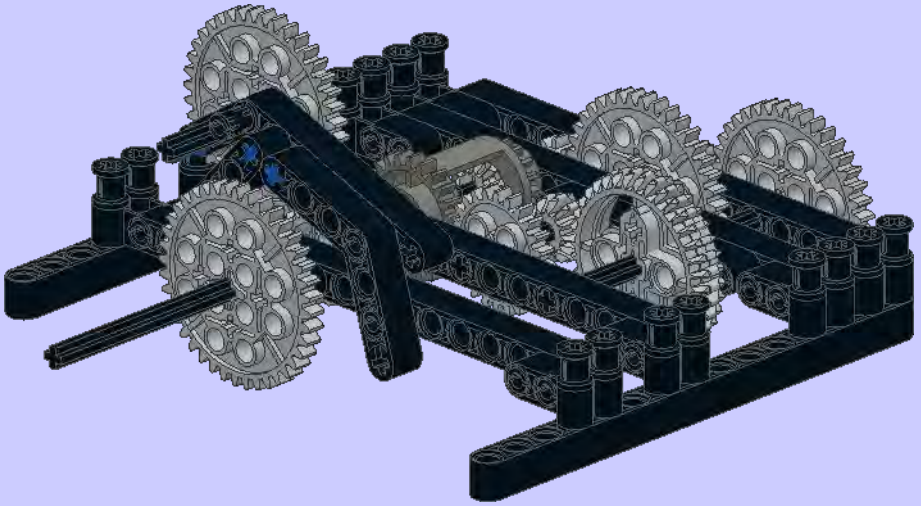

27

3

1x

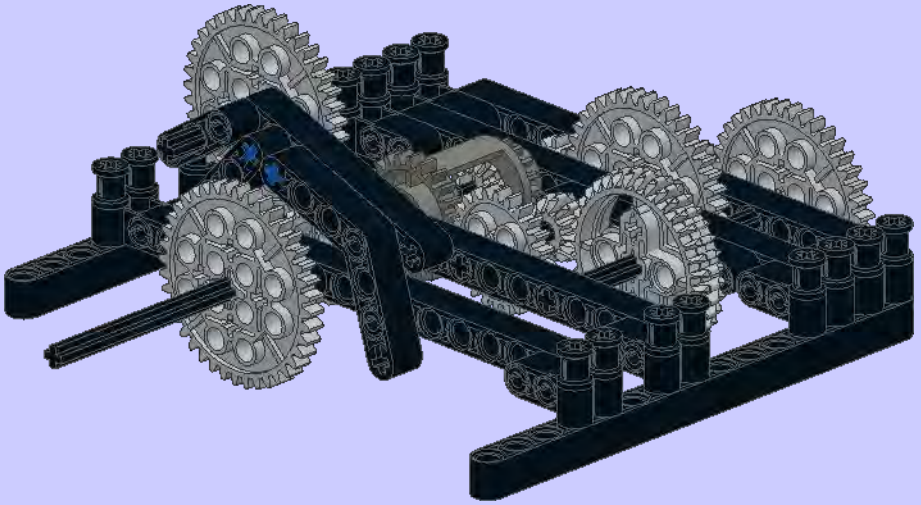

**28**

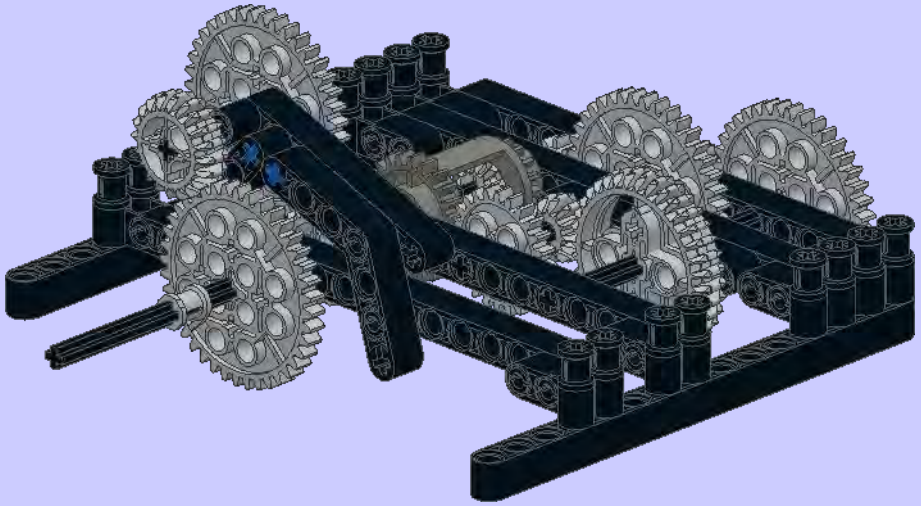

**29**

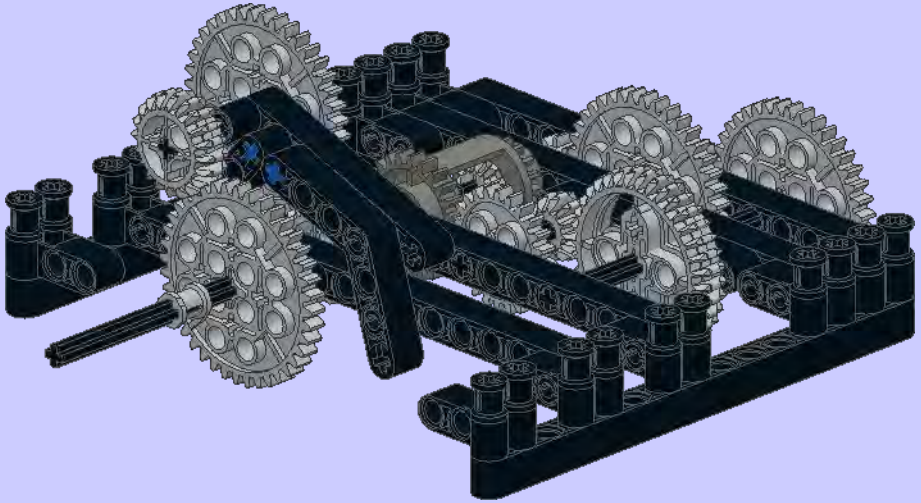

**30**

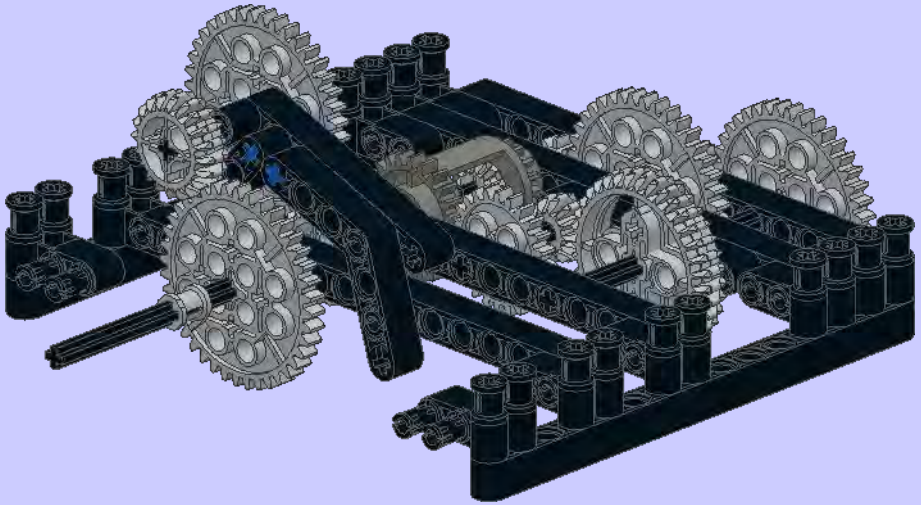

31

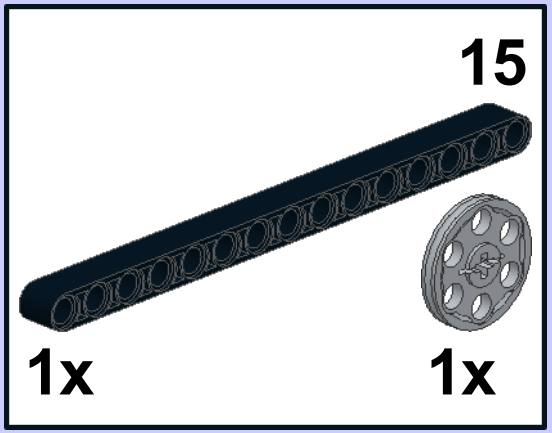


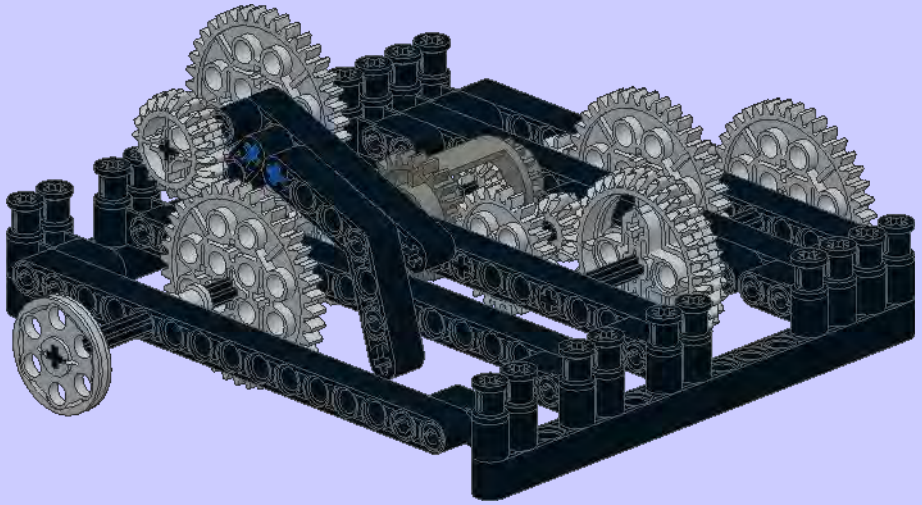

32

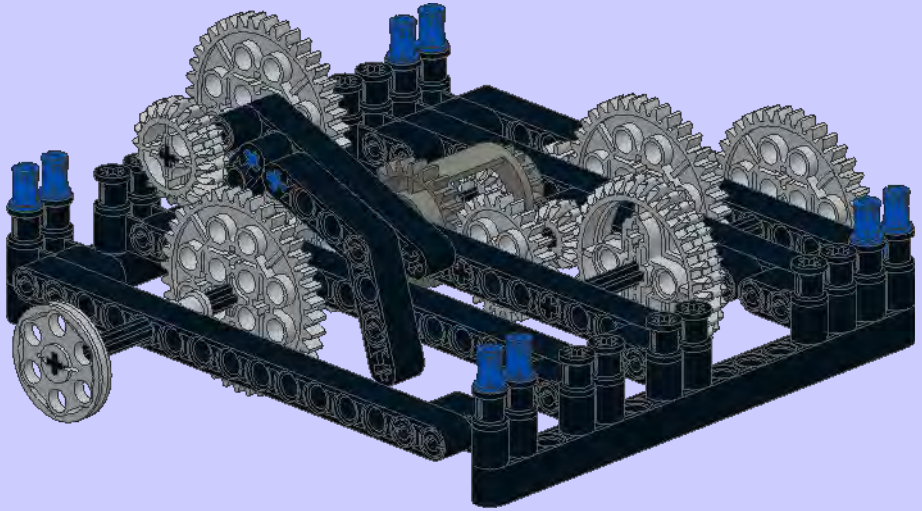

33

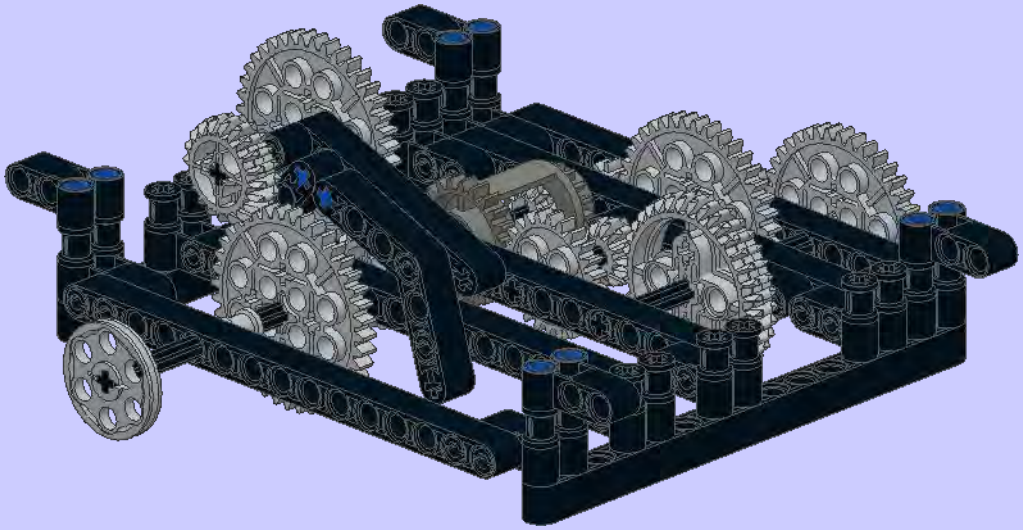

1

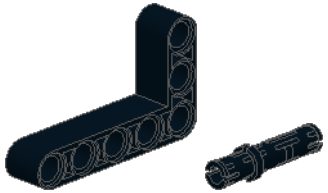


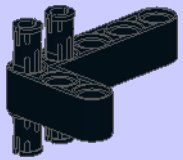

2

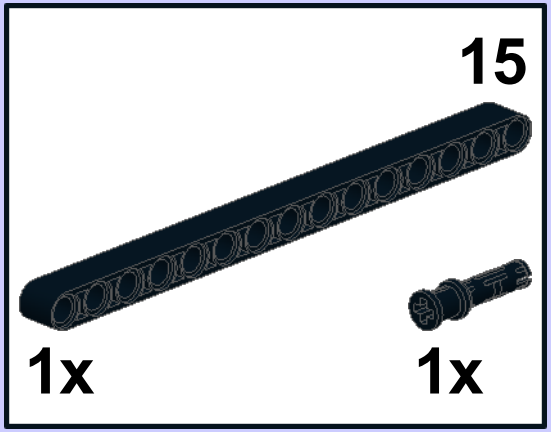


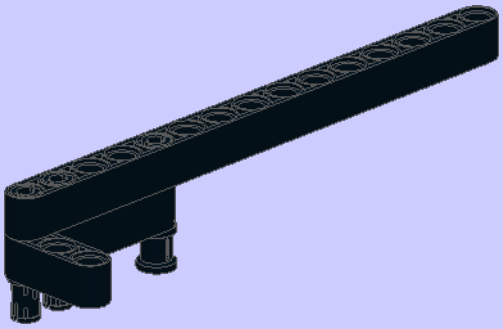

3

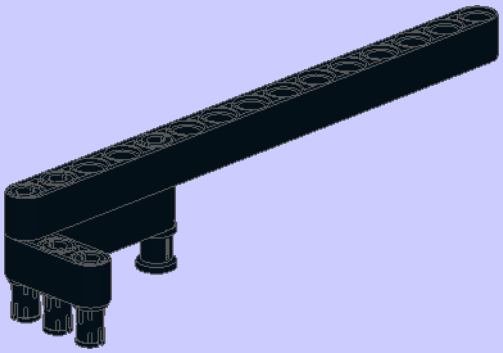

**4**

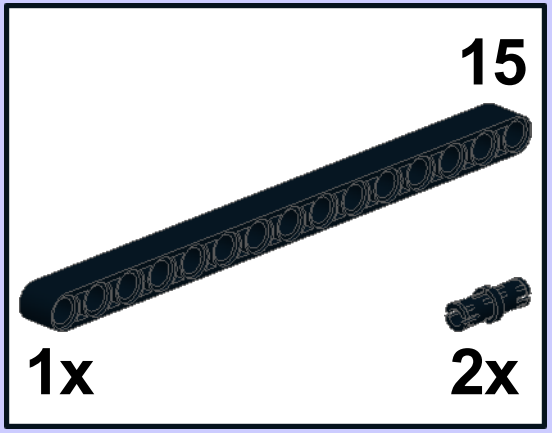


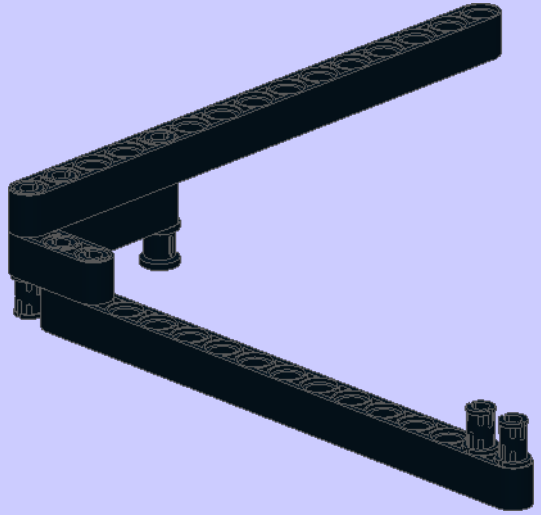

**5**

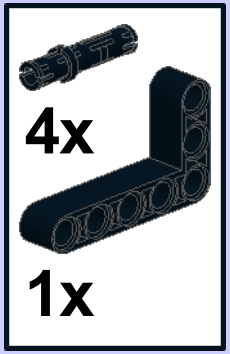


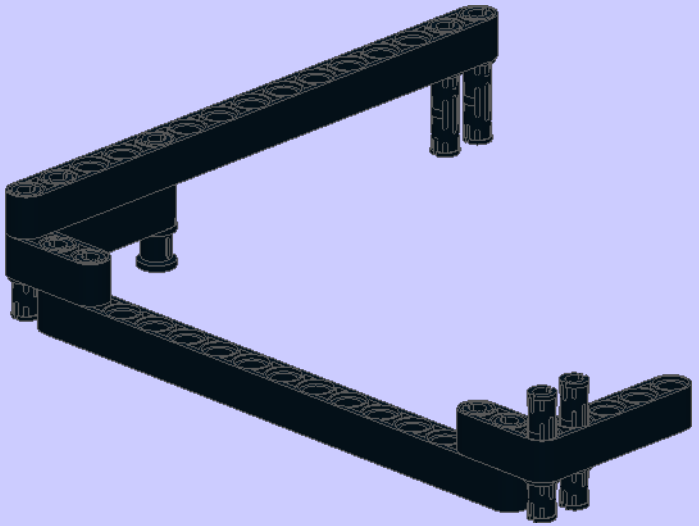

**6**

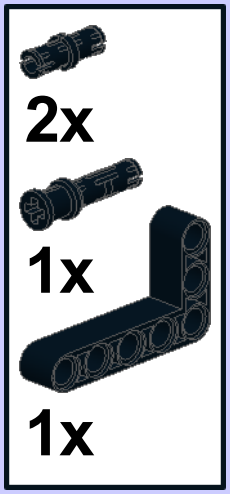


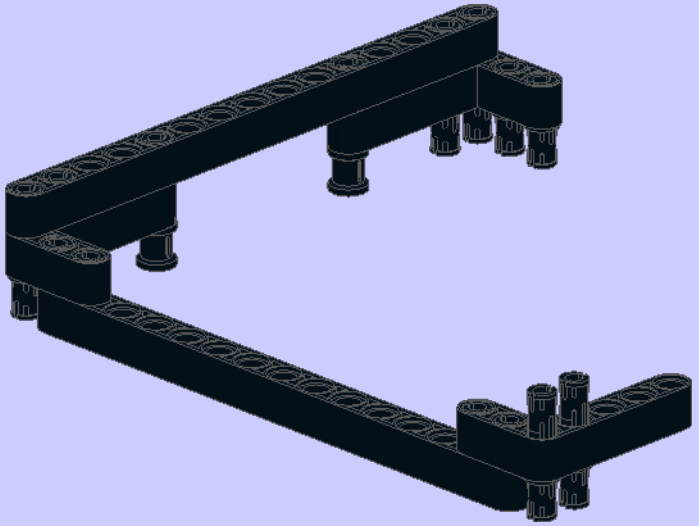

7

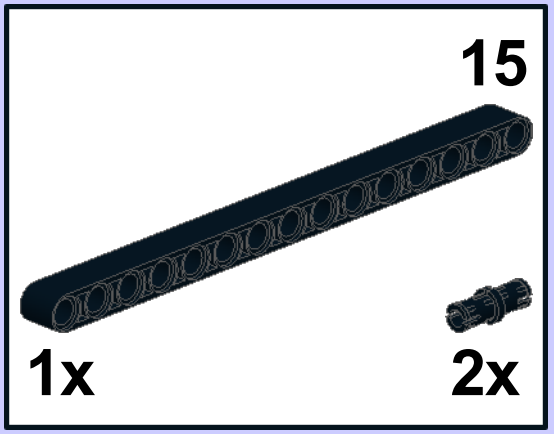


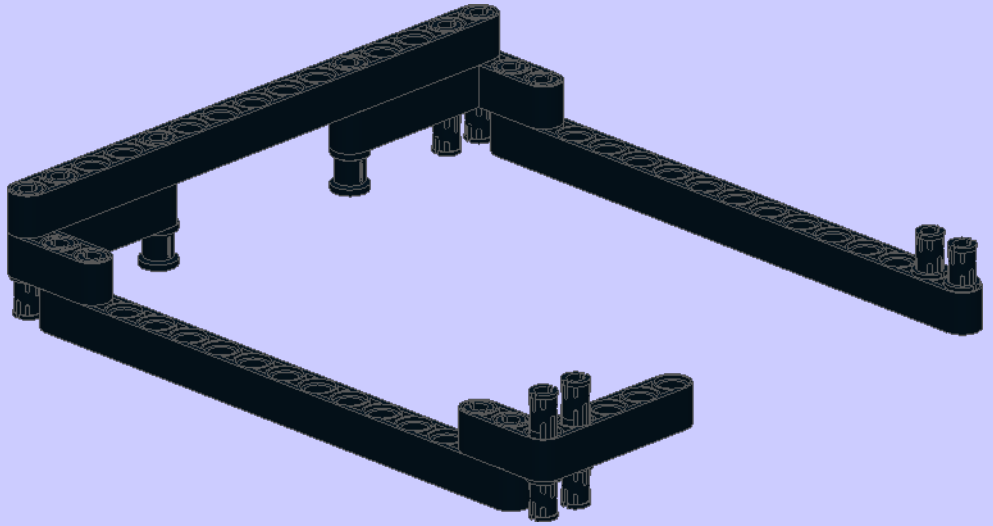

8

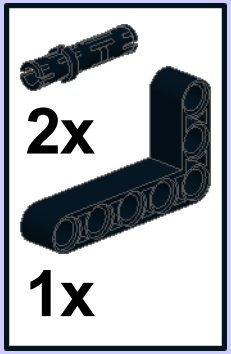


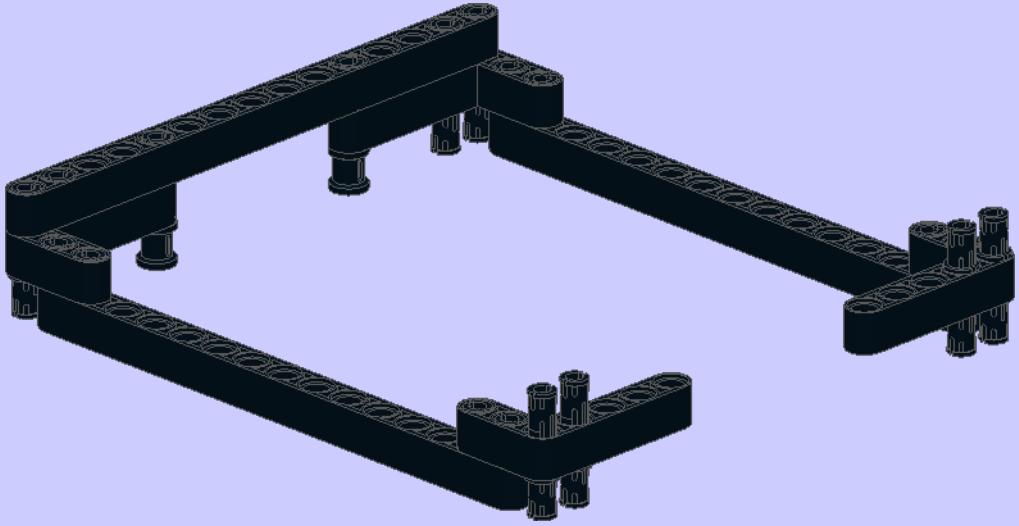

9

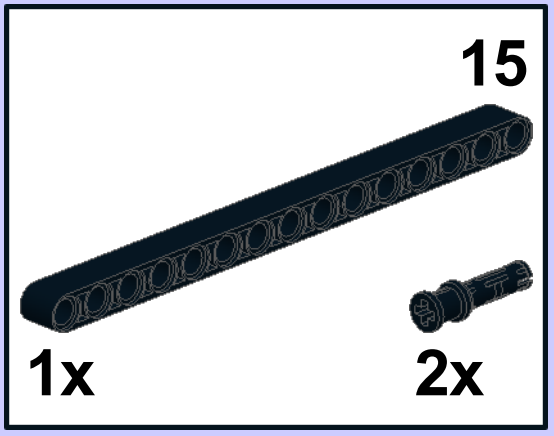


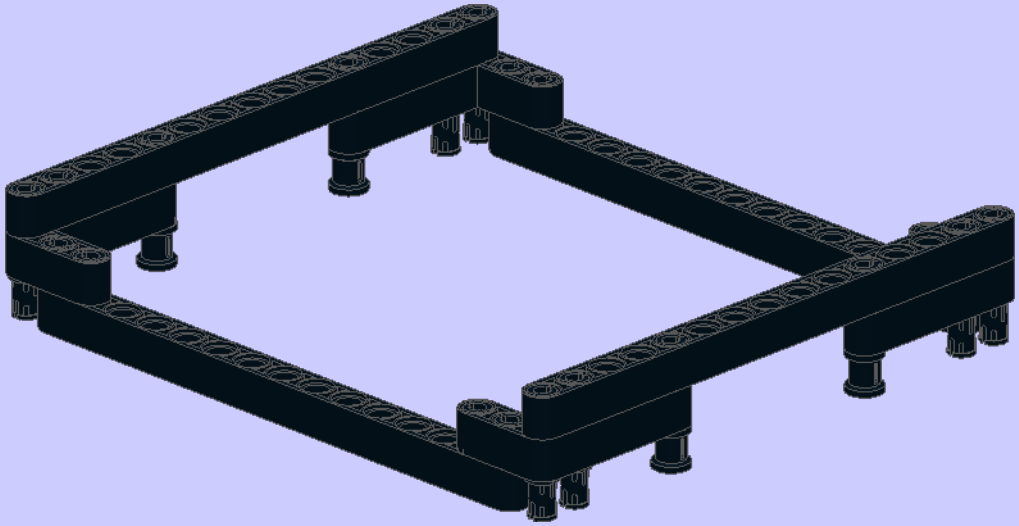

1

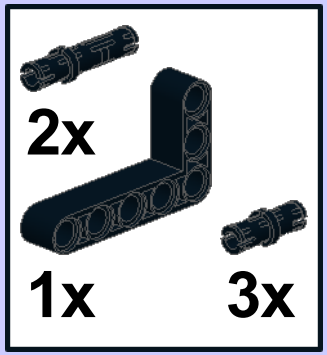


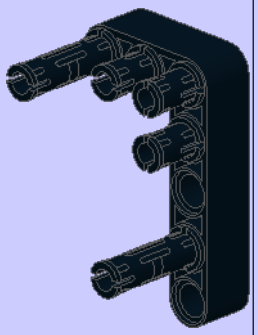

2

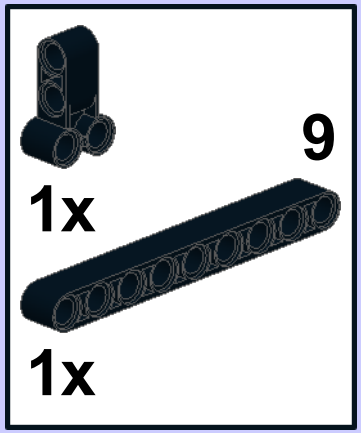


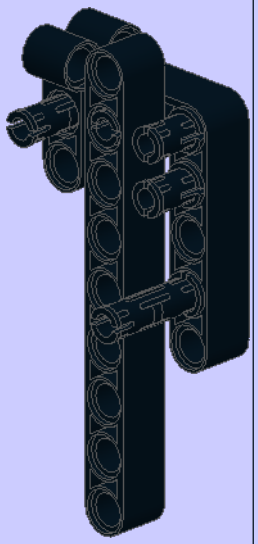

3

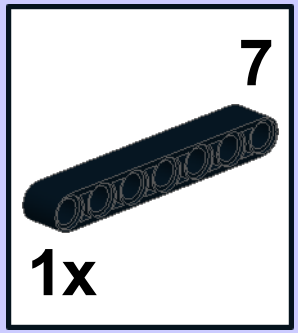


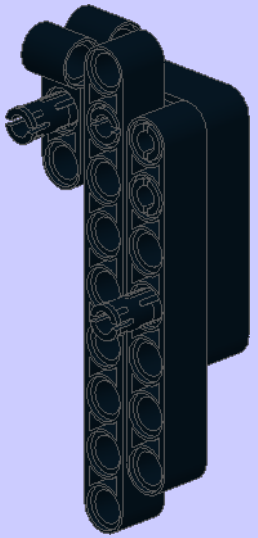

4

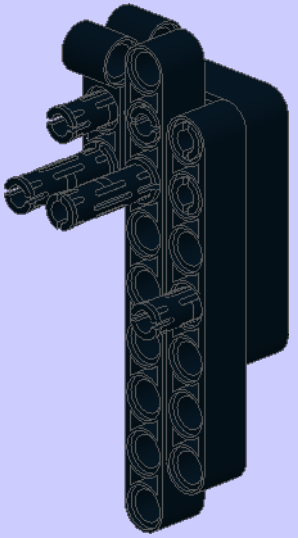

5

1x

2x

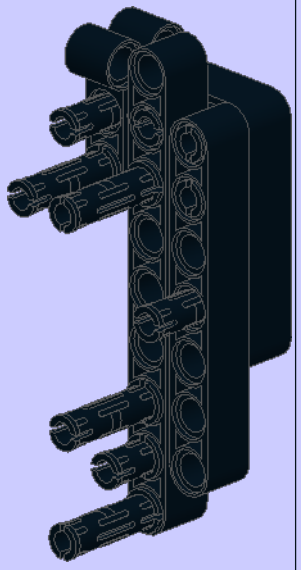

6

1x

2x

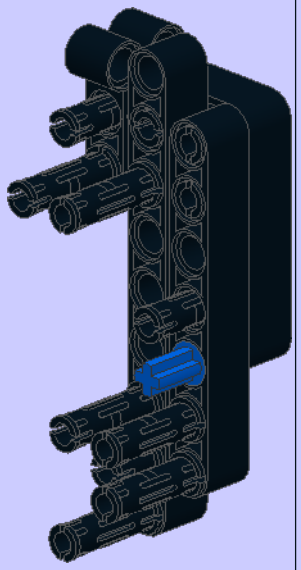

7

1x

1x

9

1x

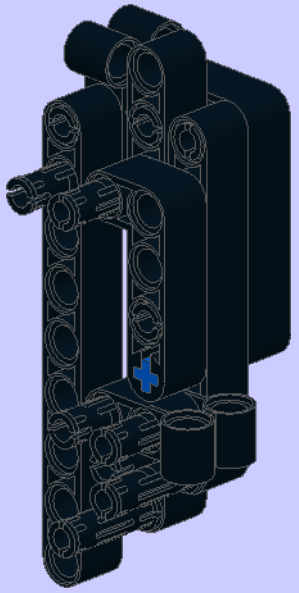

8

3

2x

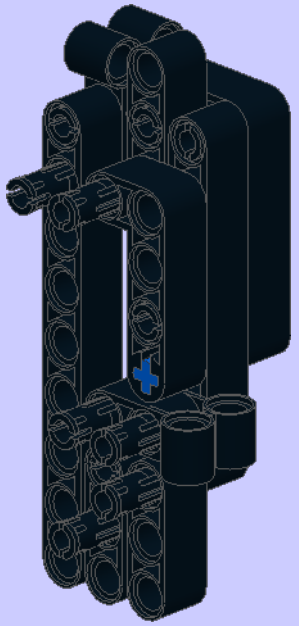

9

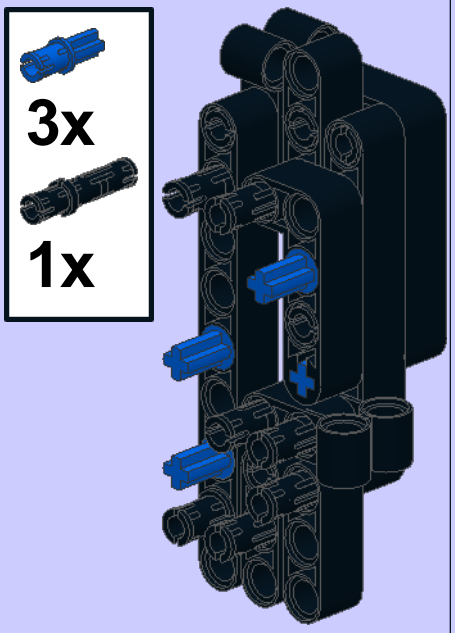


10

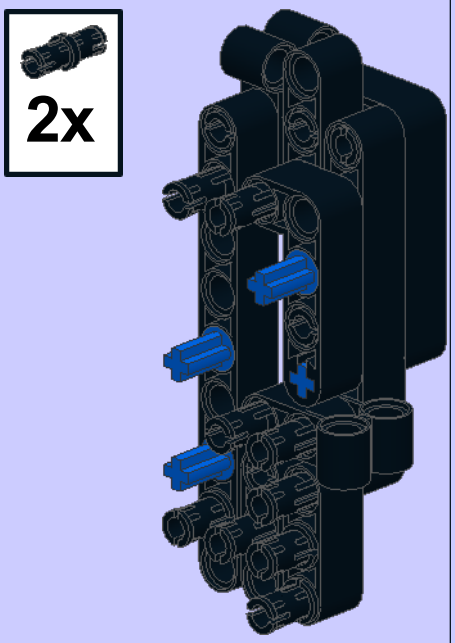


11

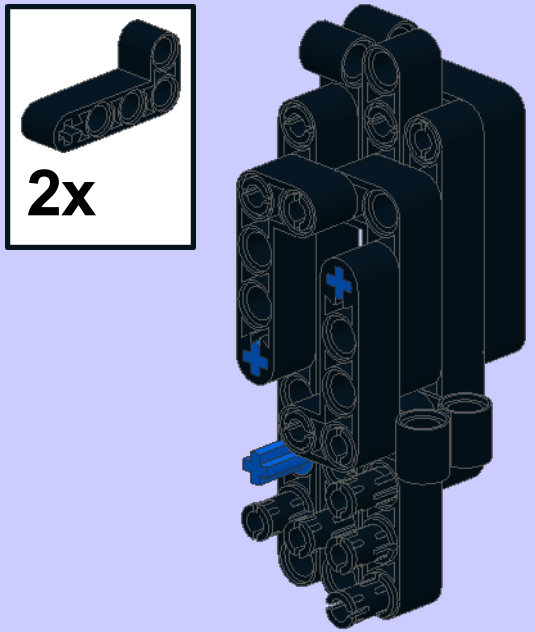


12

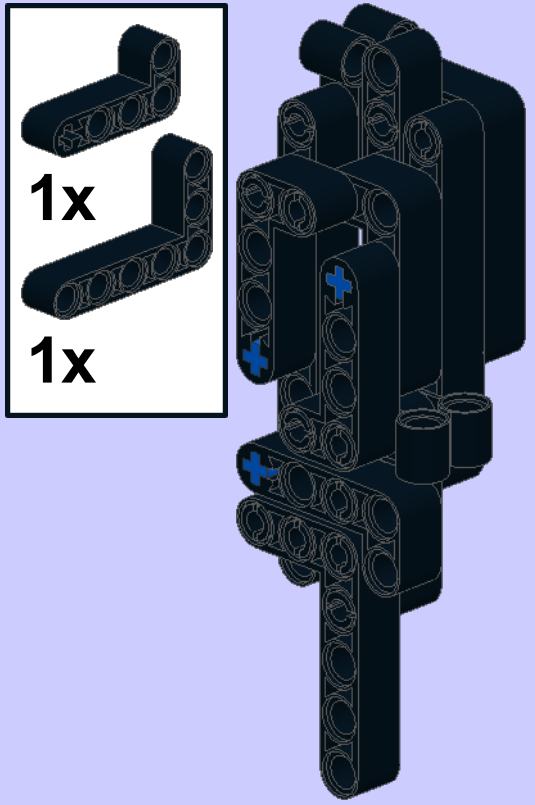

13

2x

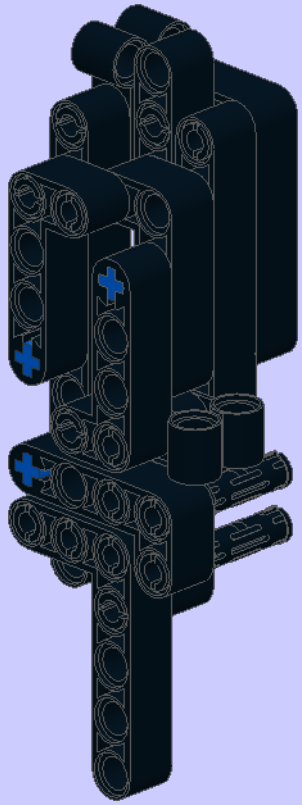

14

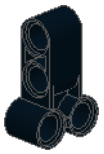

1x

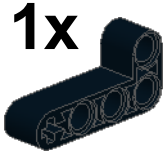

1x

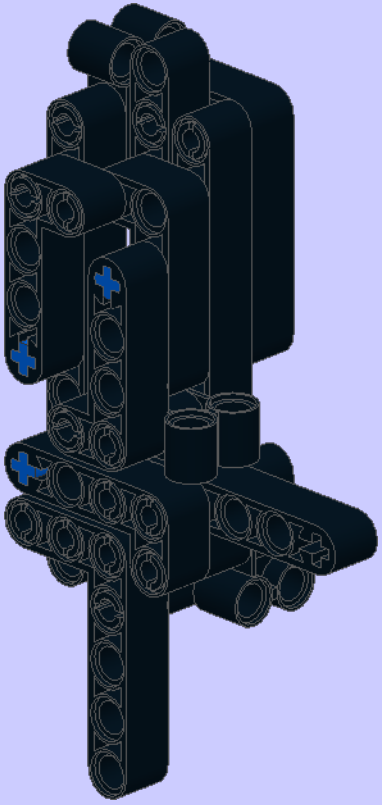

1

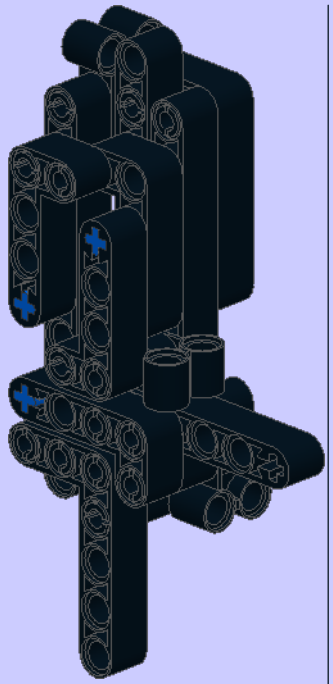

2

2x

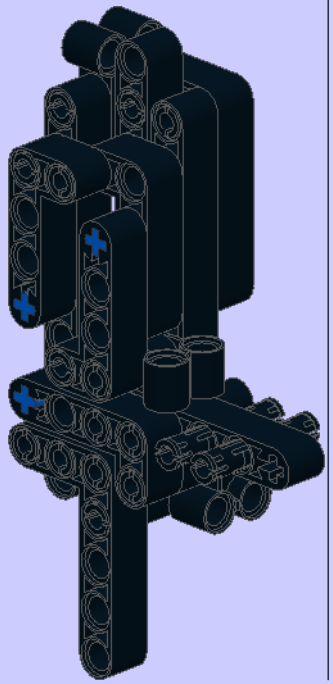

3

15

1x

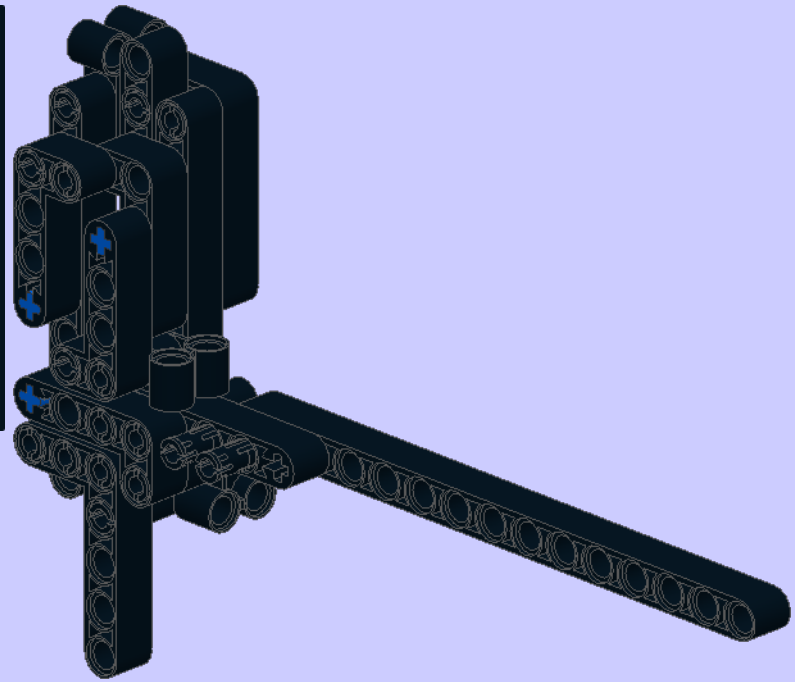

1

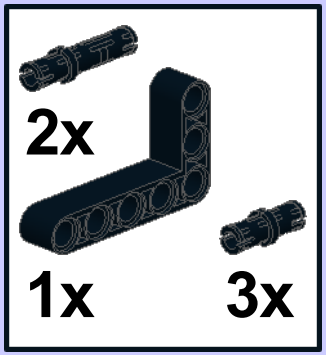


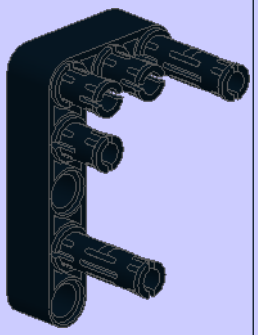

2

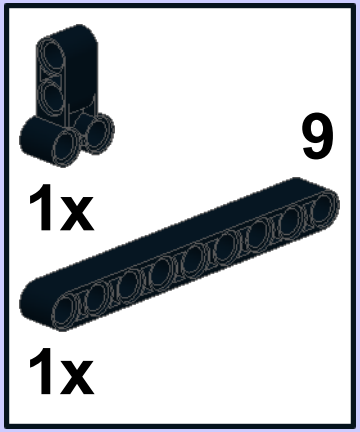


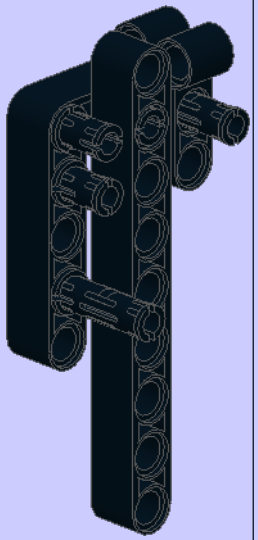

3

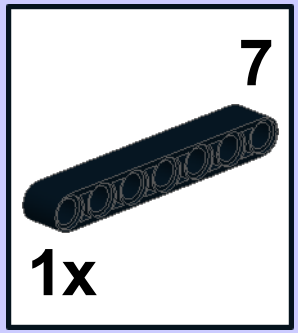


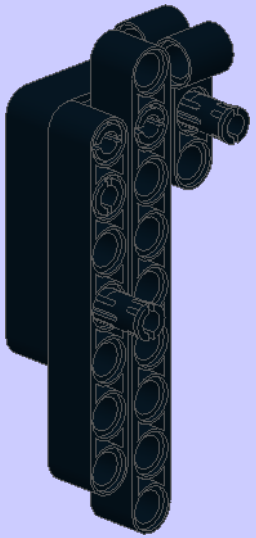

4

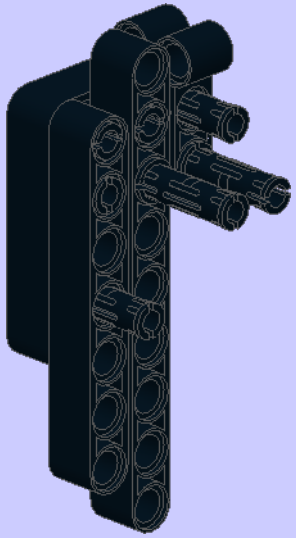

5

1x

2x

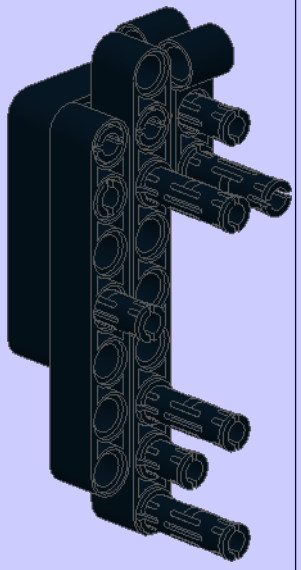

6

1x

2x

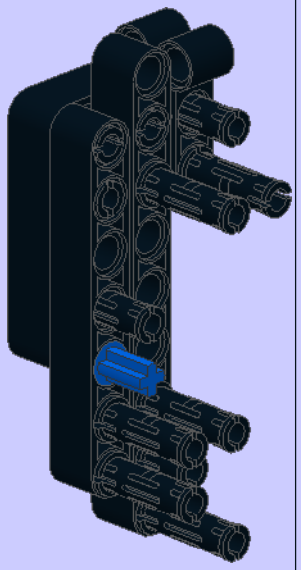

7

1x

1x

9

1x

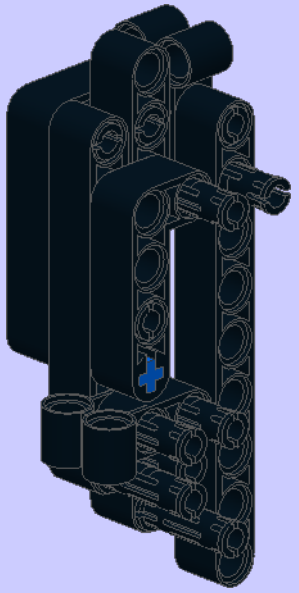

8

3

2x

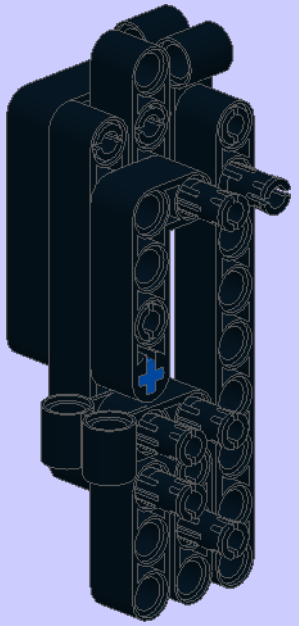

9

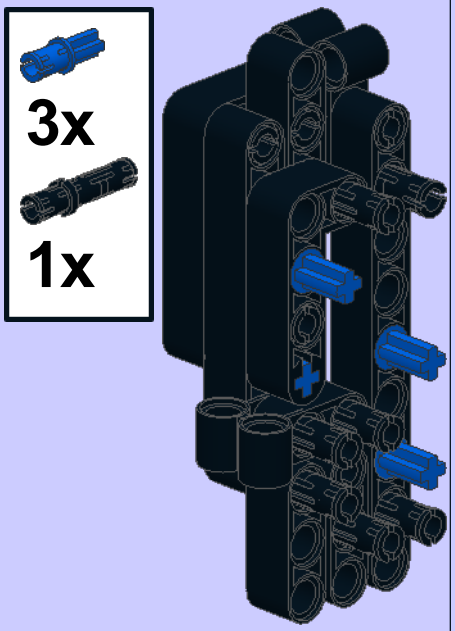


10

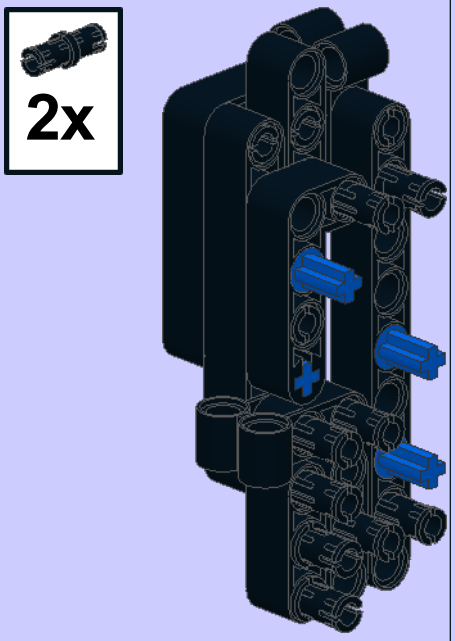


11

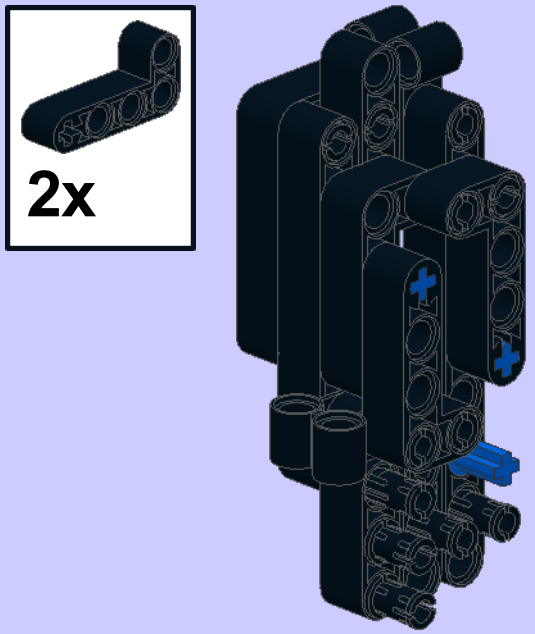


12

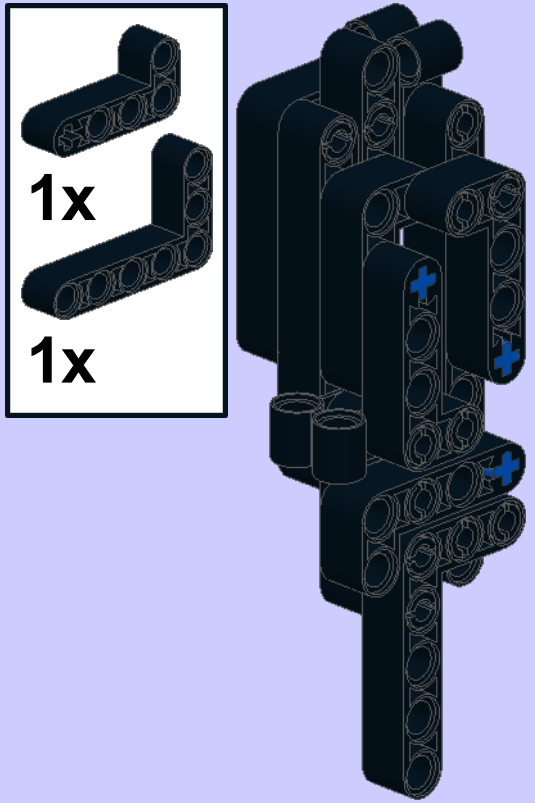

13

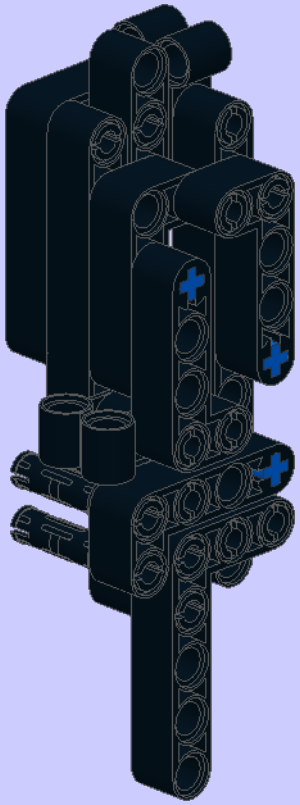

14

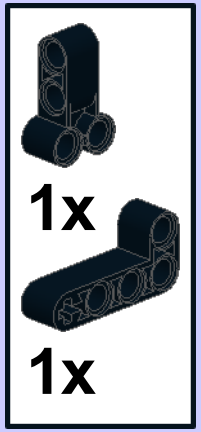


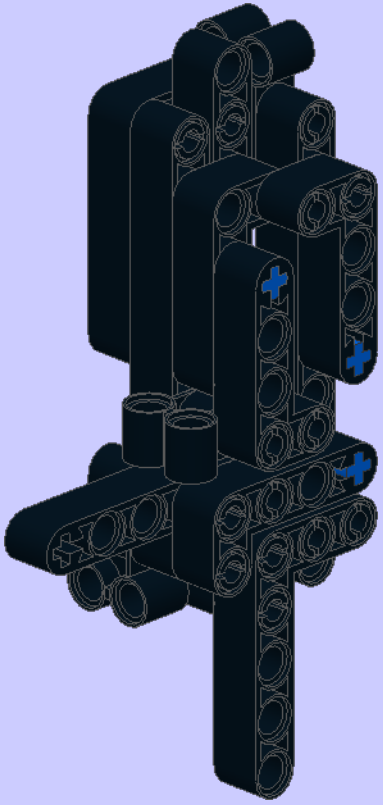

4

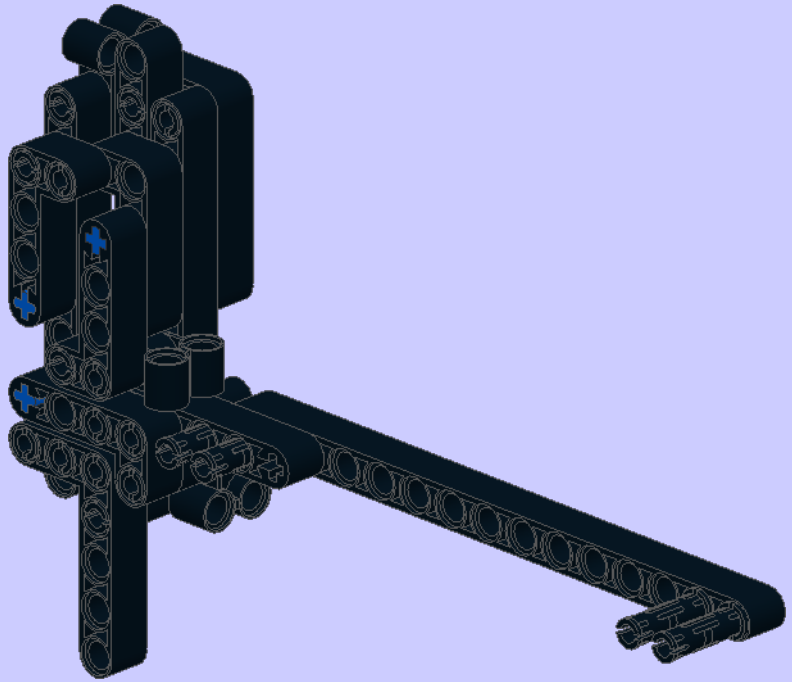

5

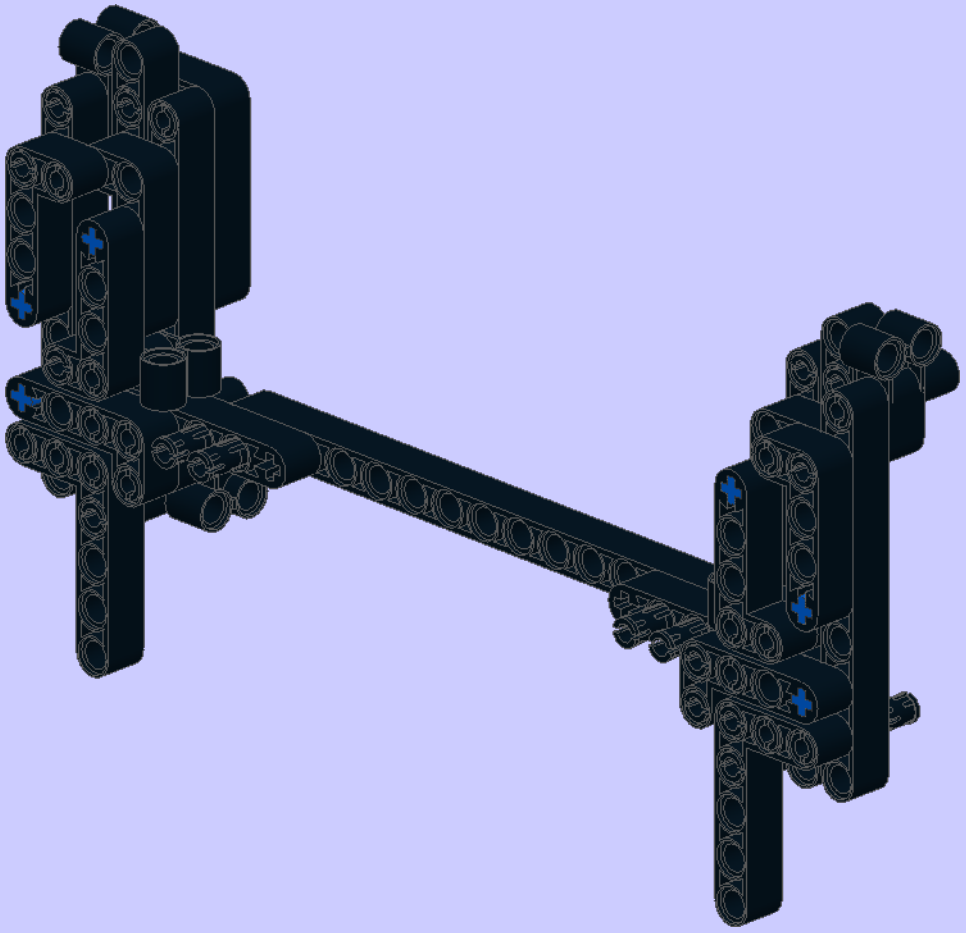

x4

6

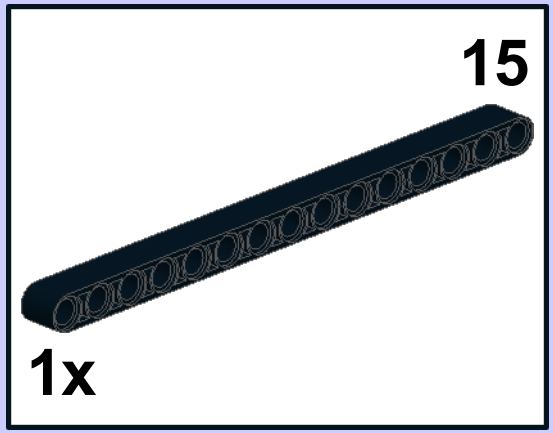


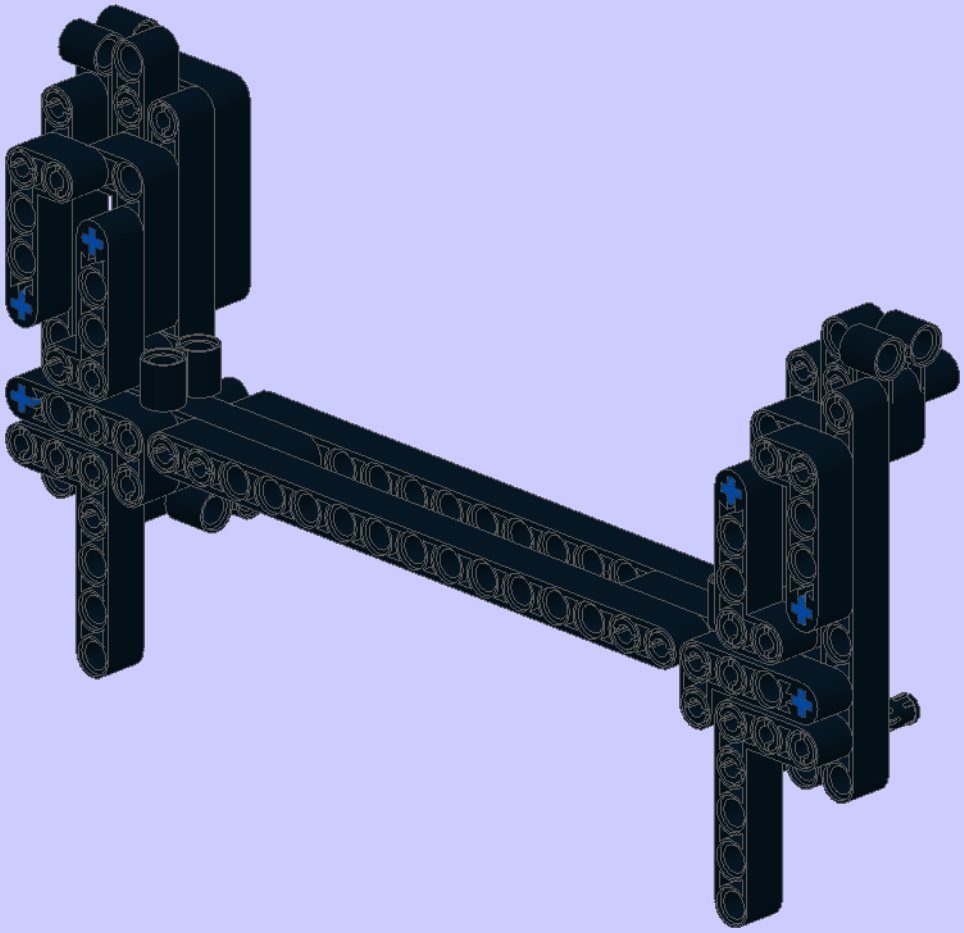

x4

10

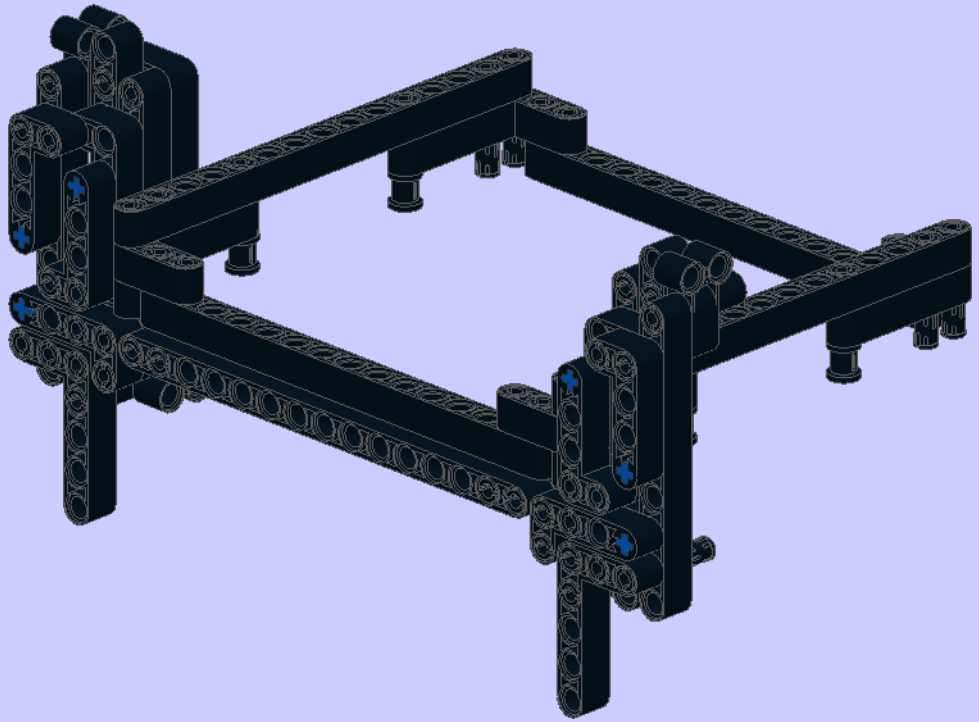

11

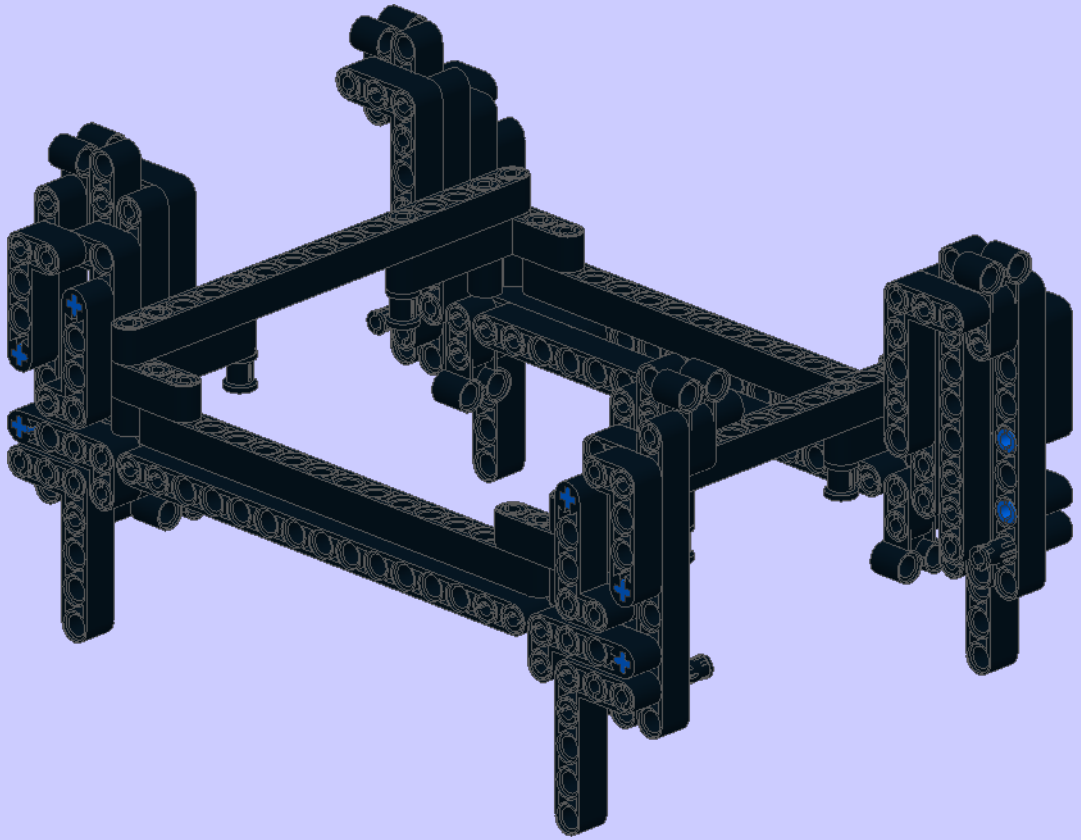

x7

1

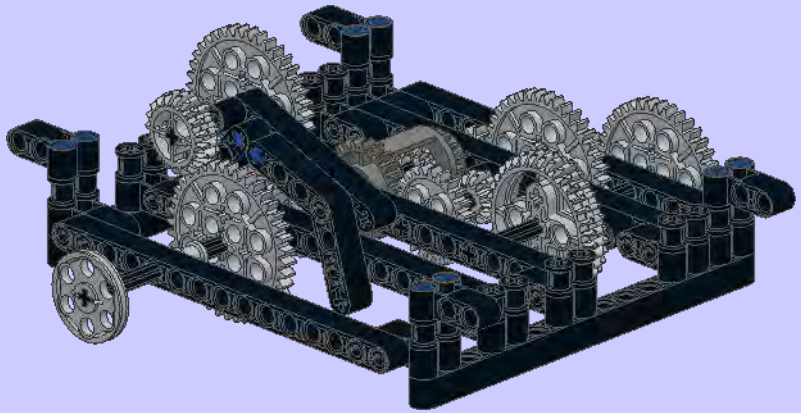

2

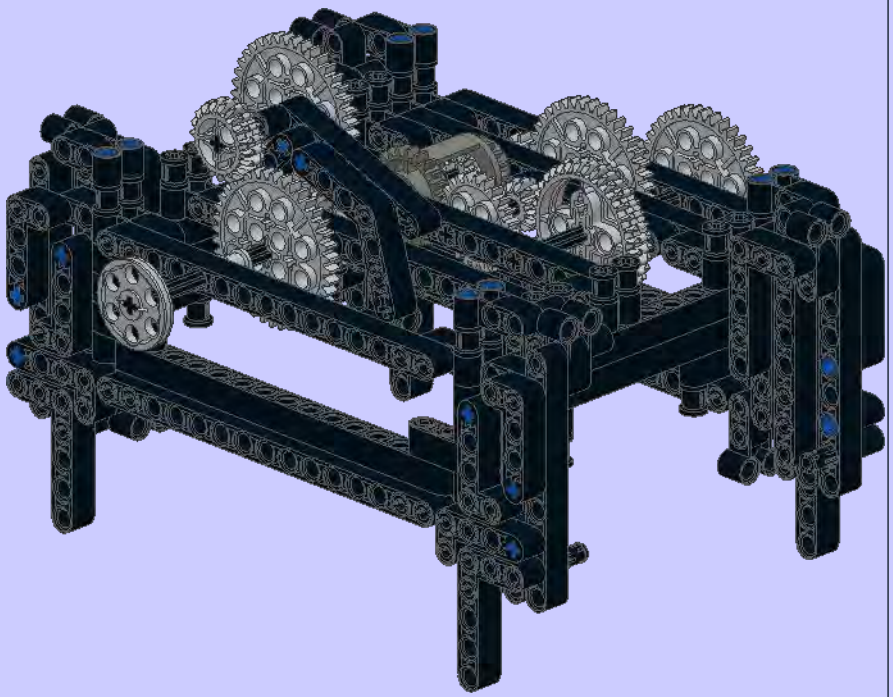

3

4x

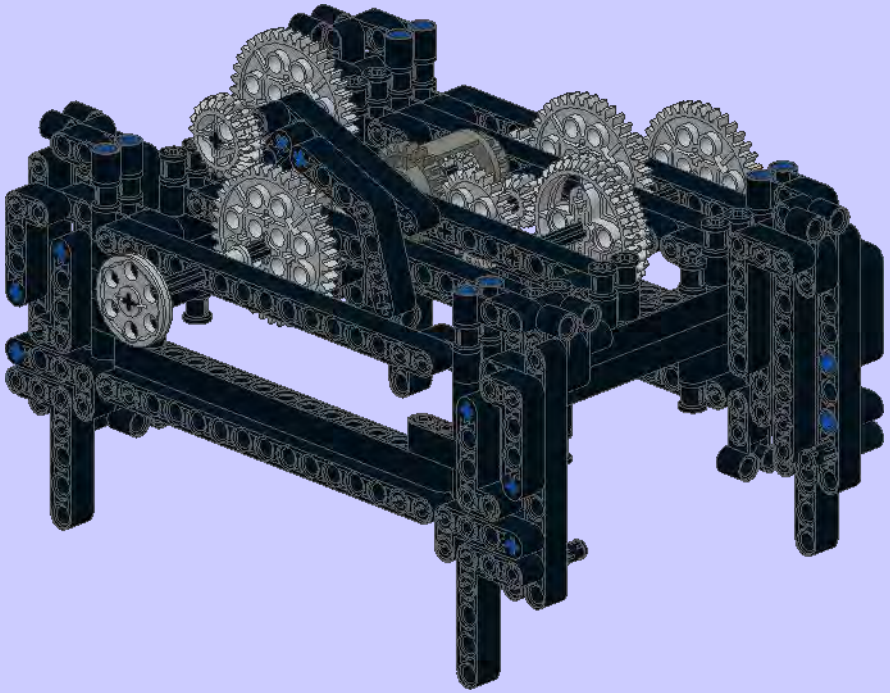

4

4x

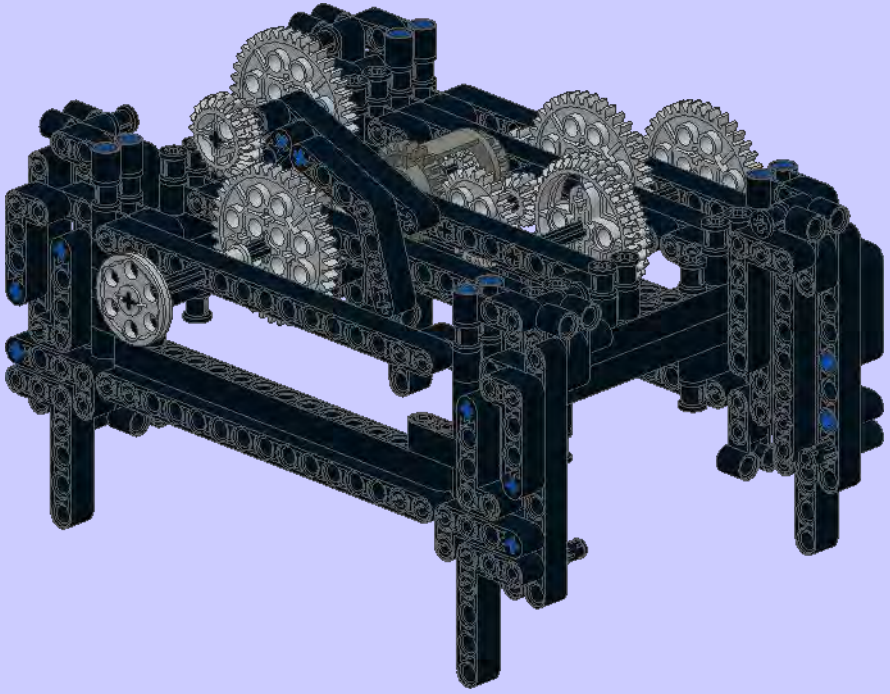

5

2x

3

1x

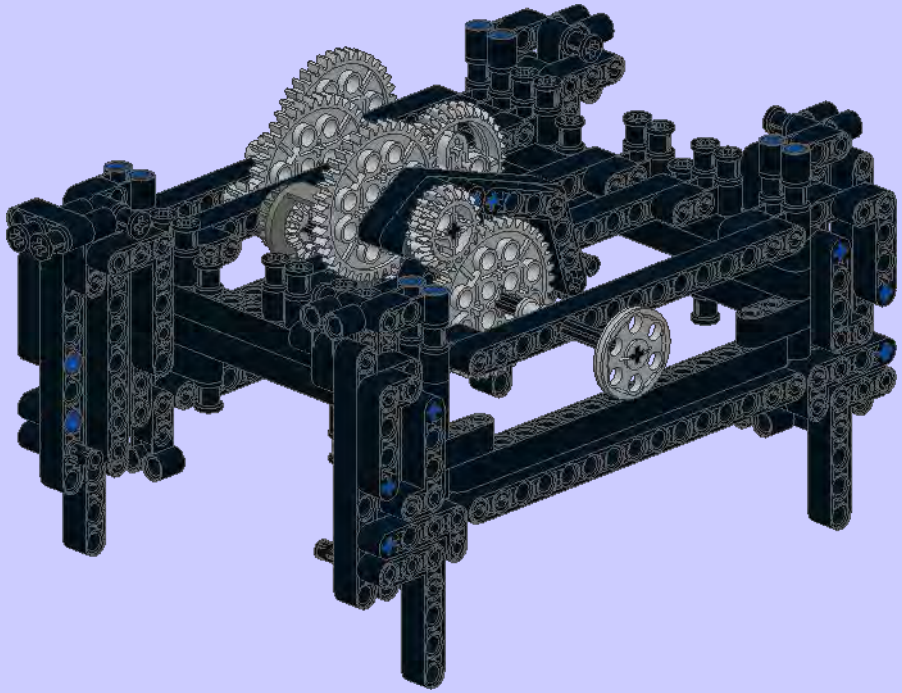

6

2x

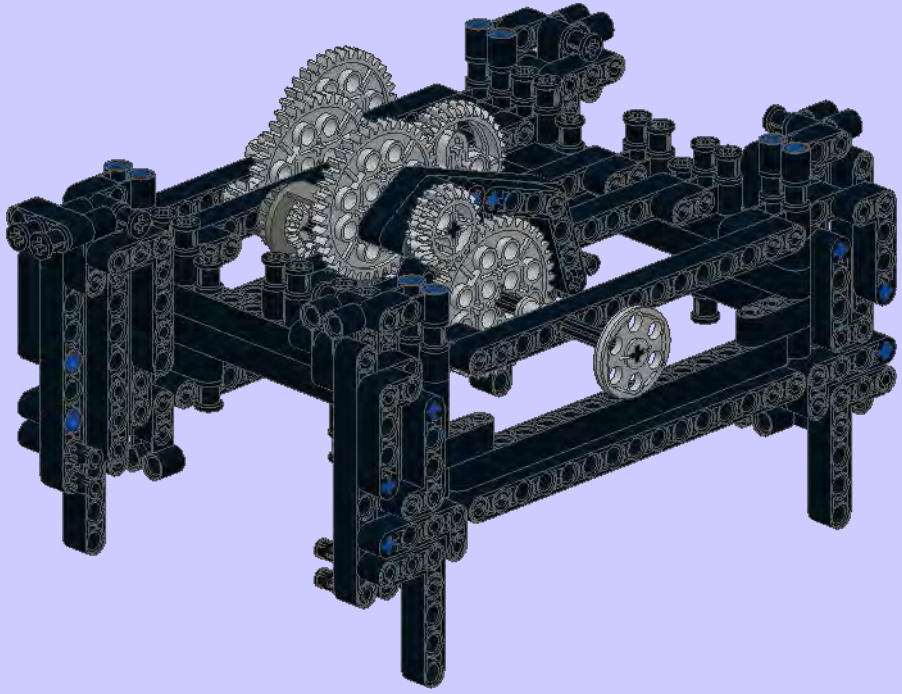

7

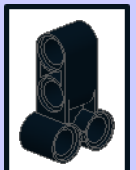

2x

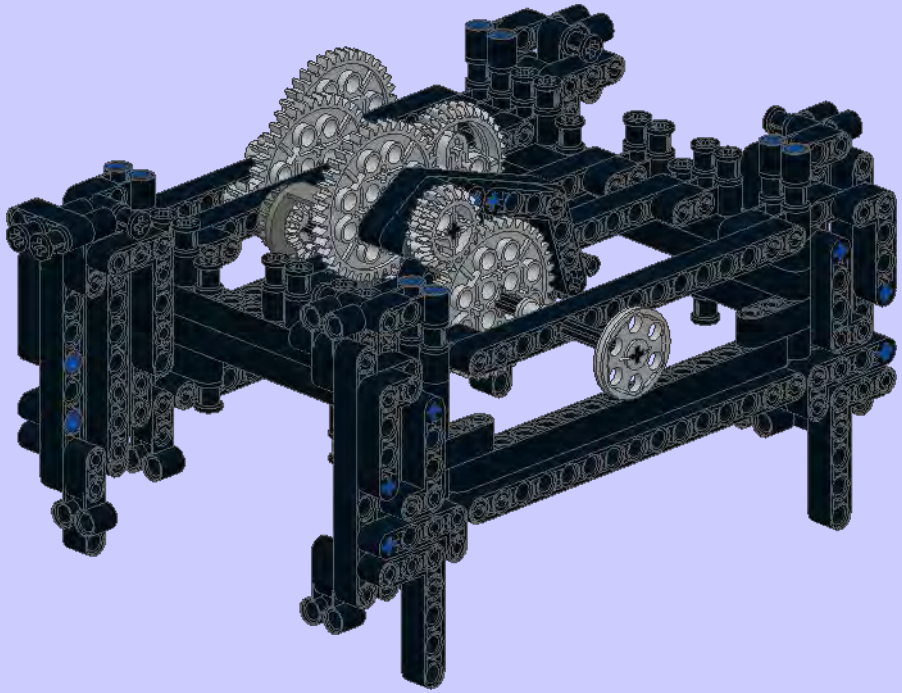

8

2x

3

1x

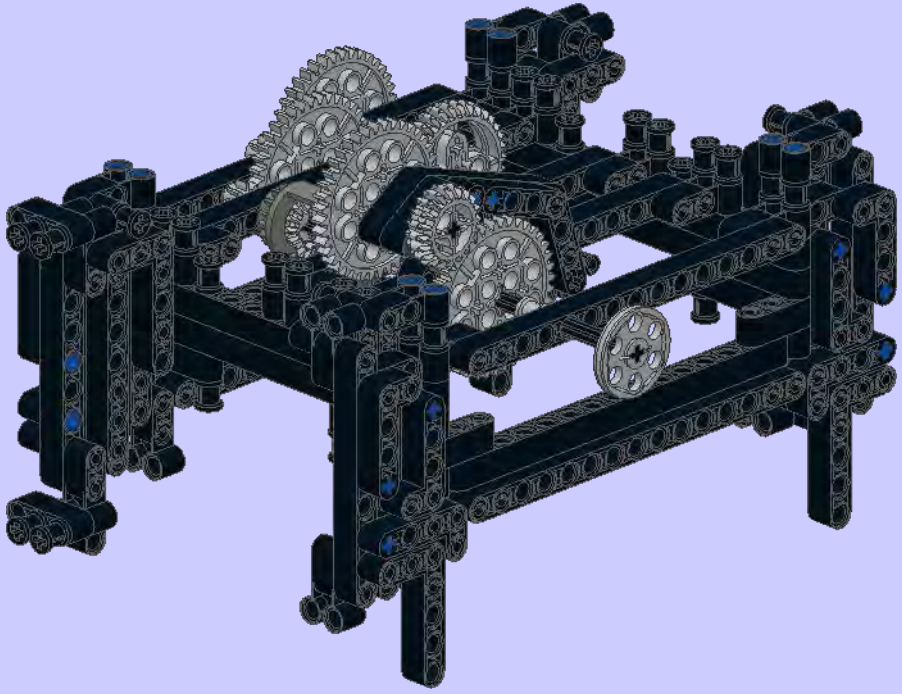

**9**

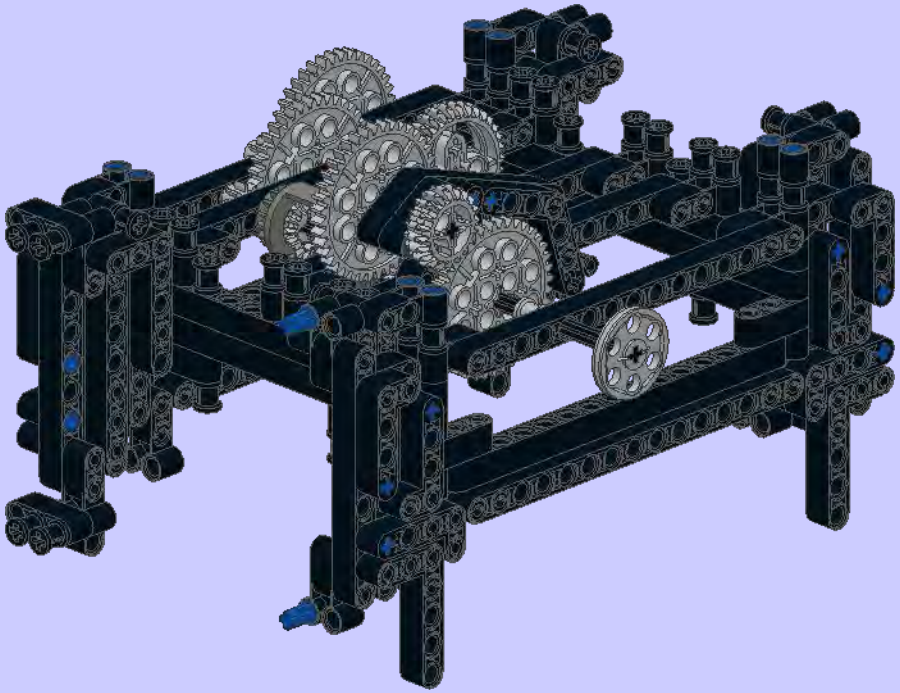

**10**

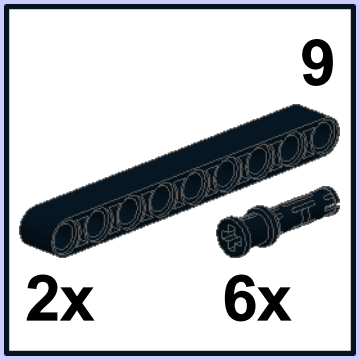


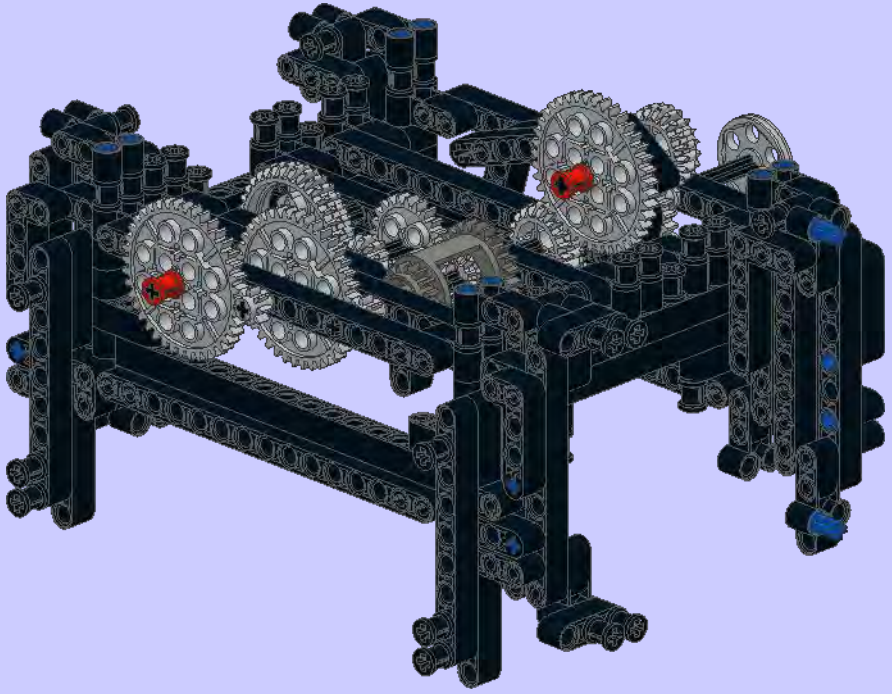

11

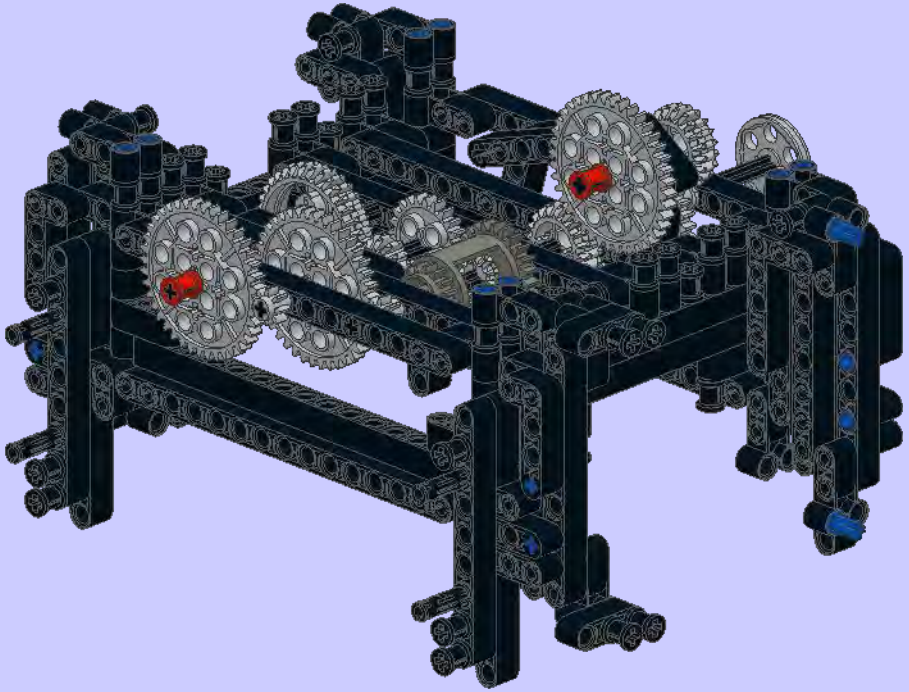

12

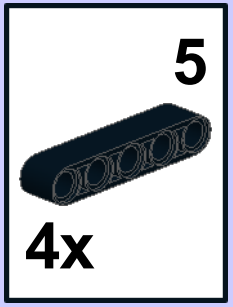


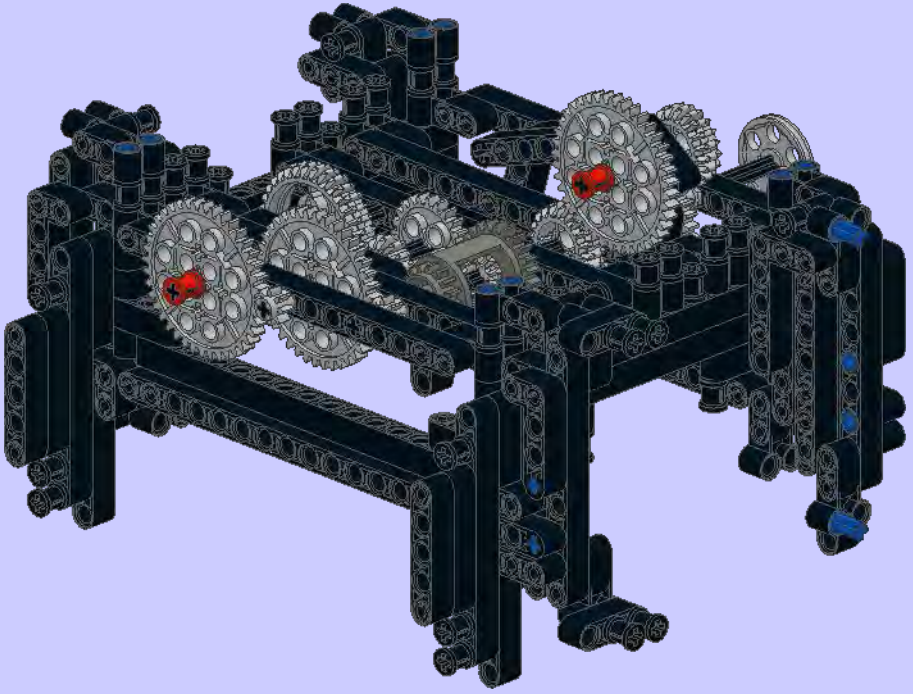

13

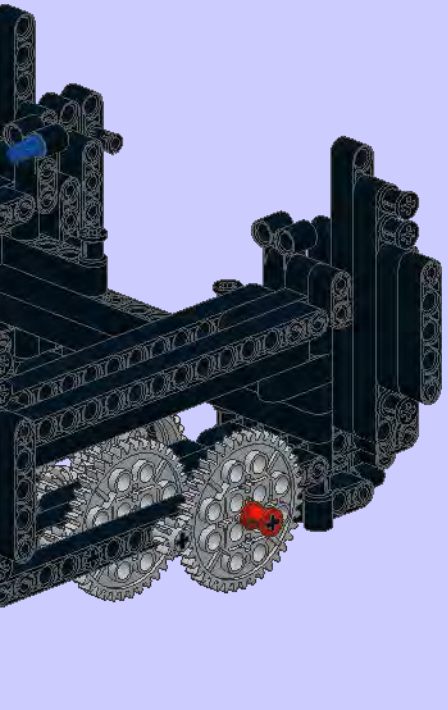


14

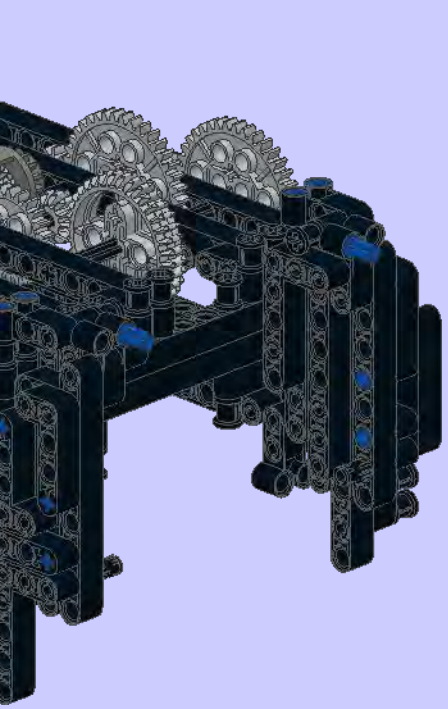

15

2x

2x

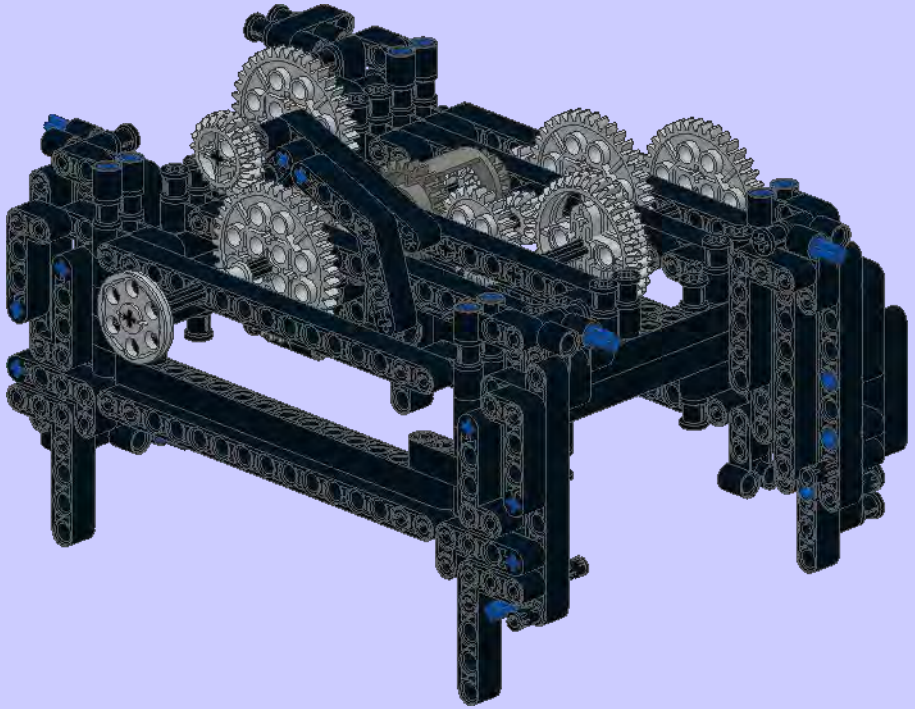

16

2x

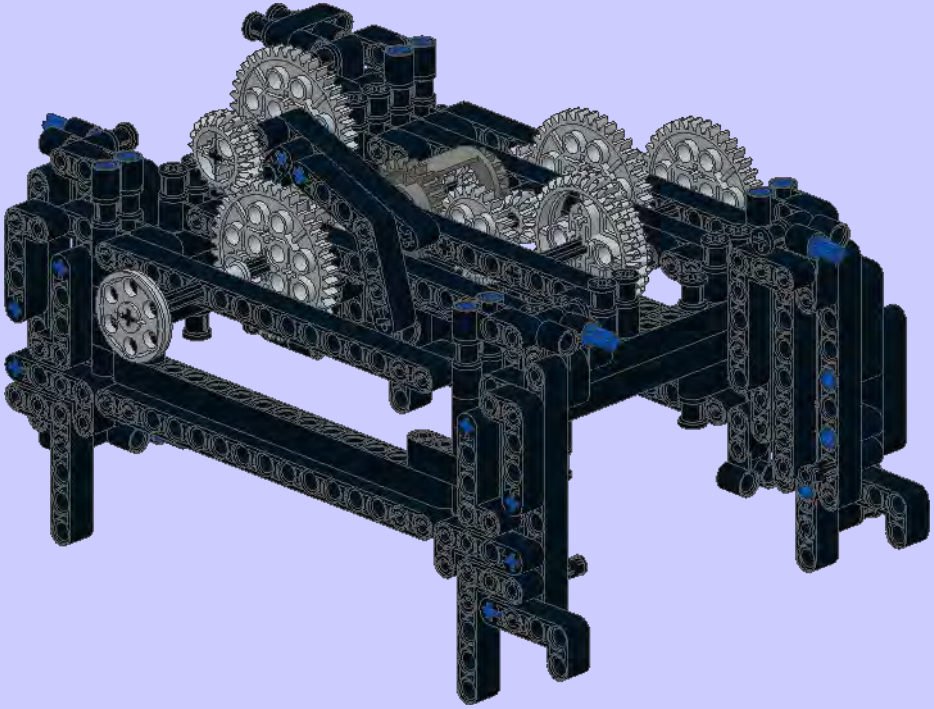

1

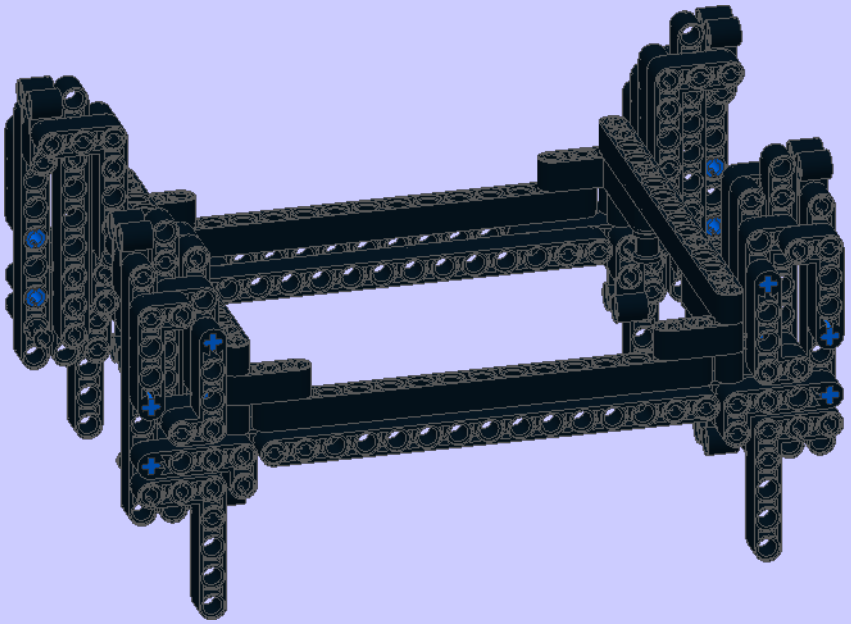

2

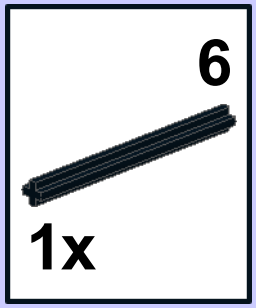


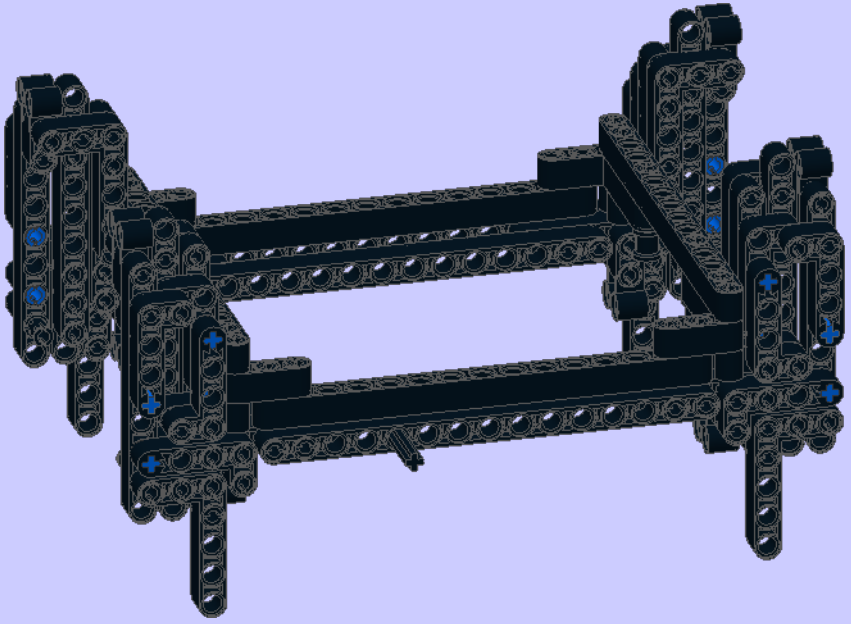

3

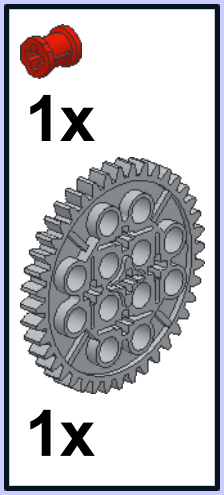


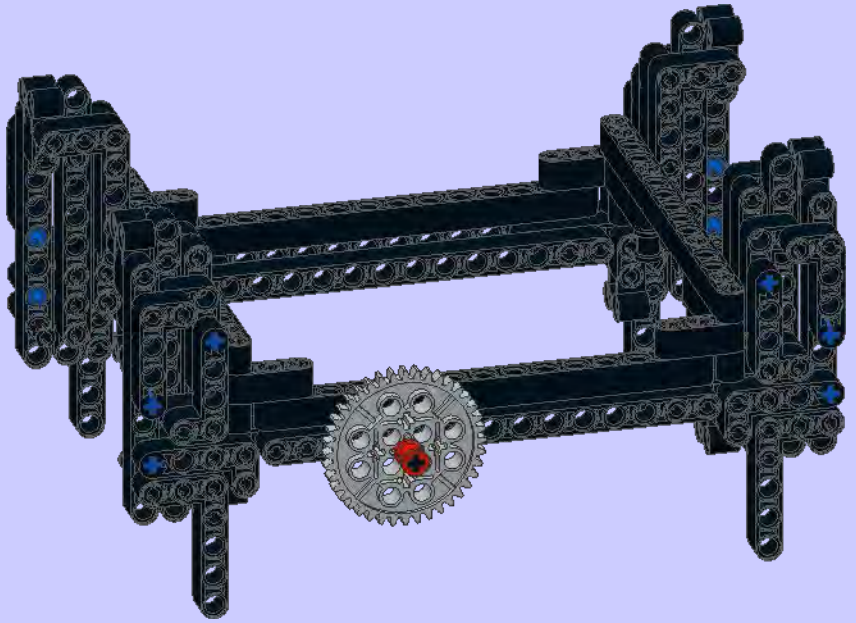

4

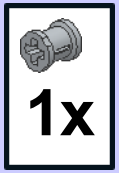


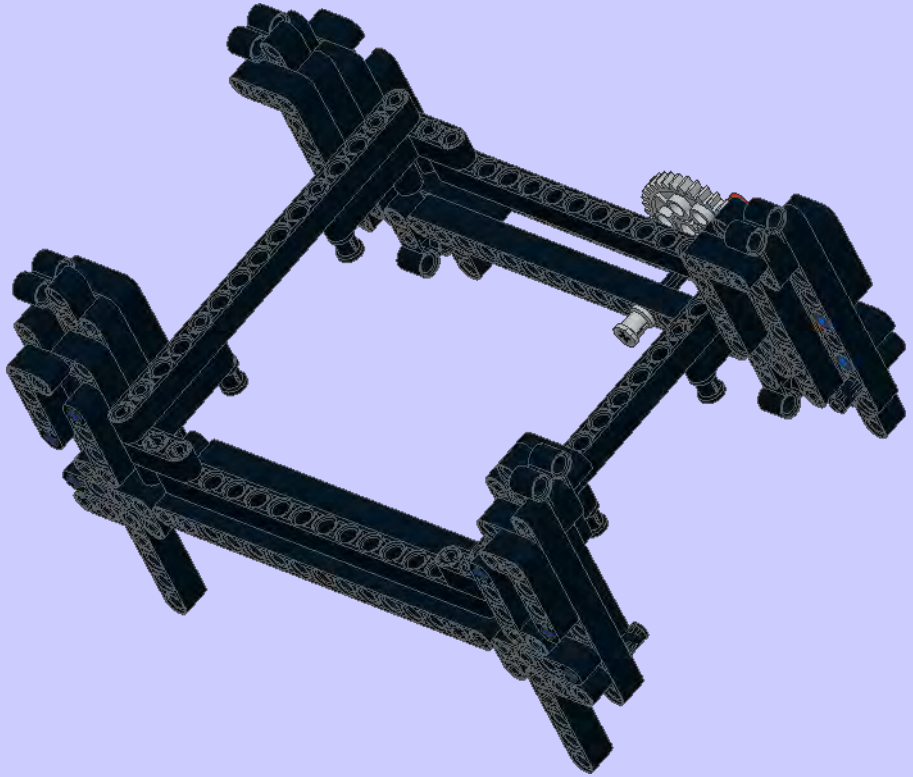

1

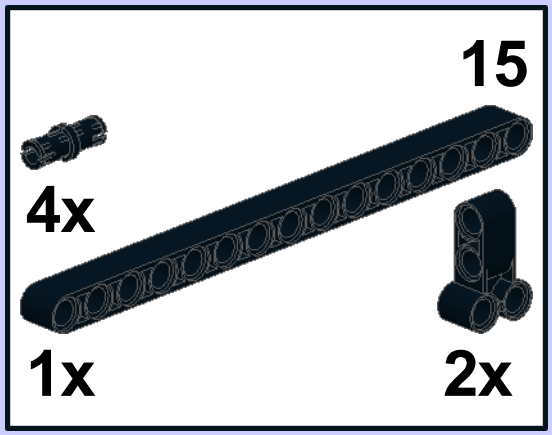


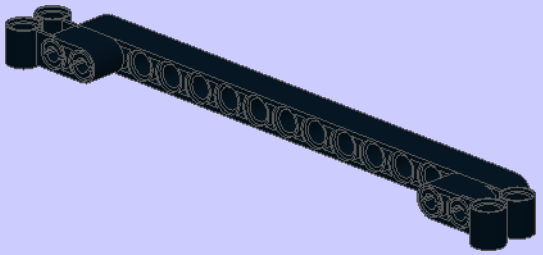

2

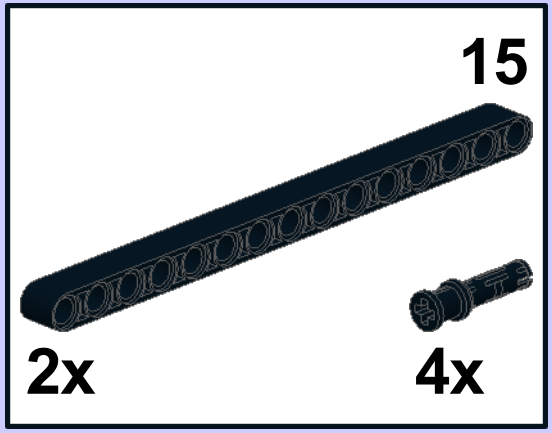


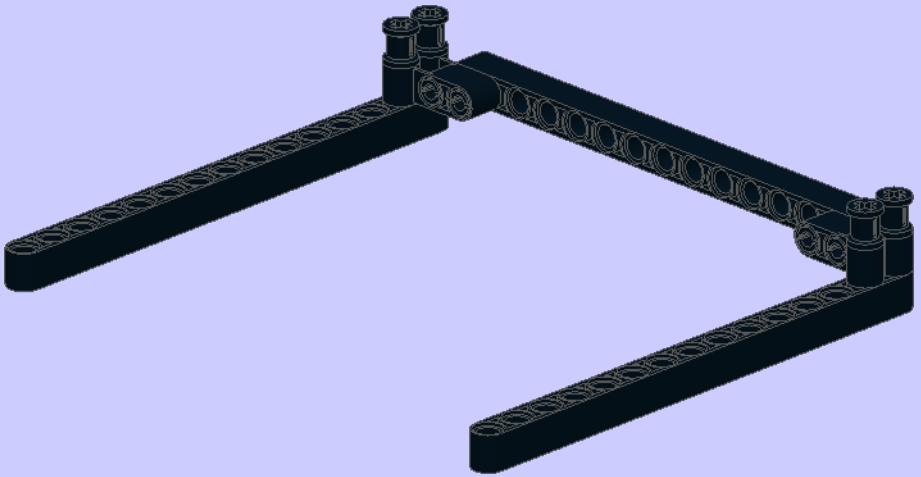

3

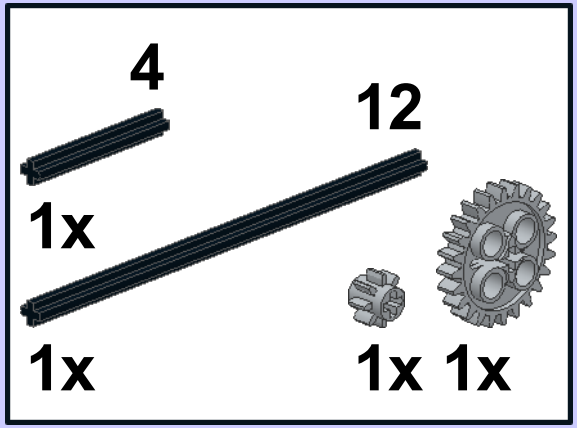


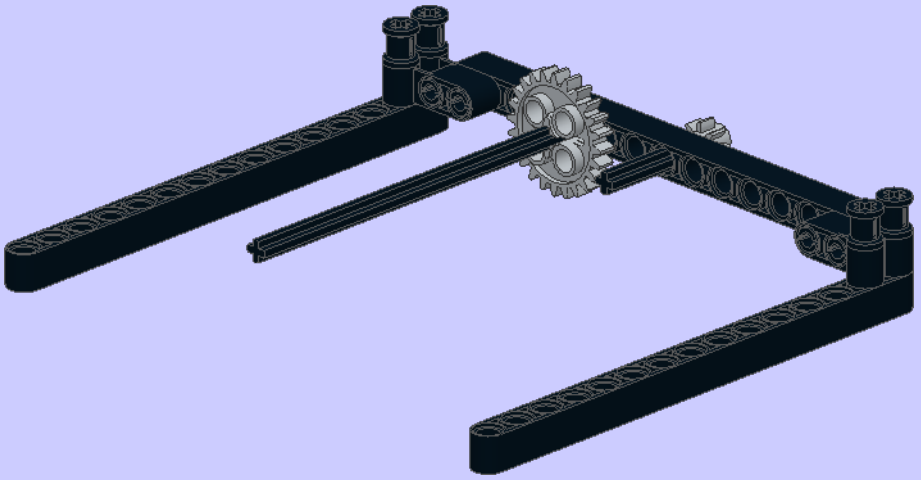

**4**

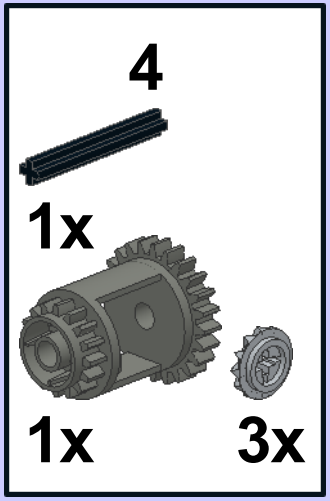


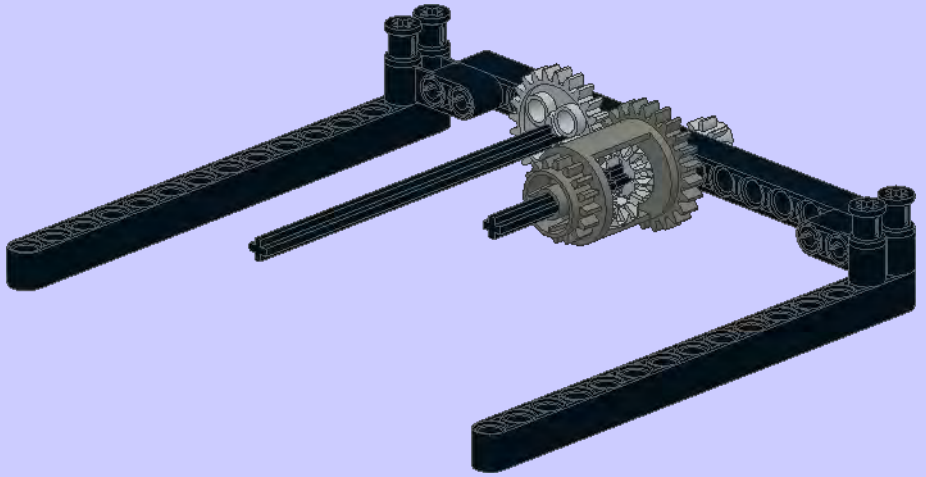

**5**

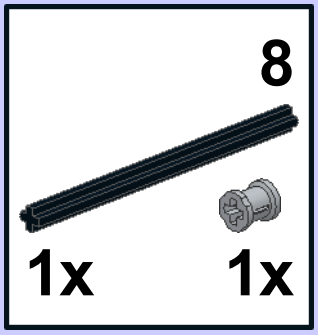


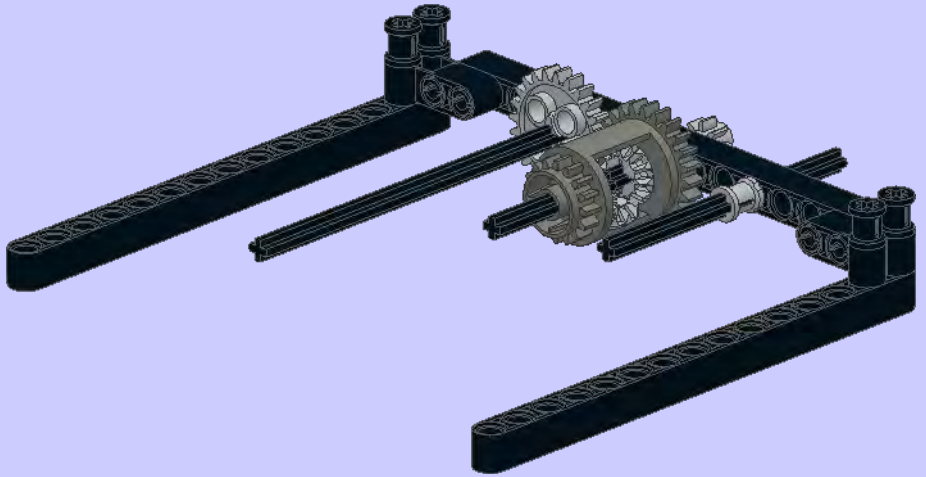

**6**

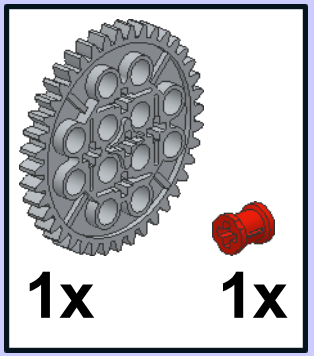


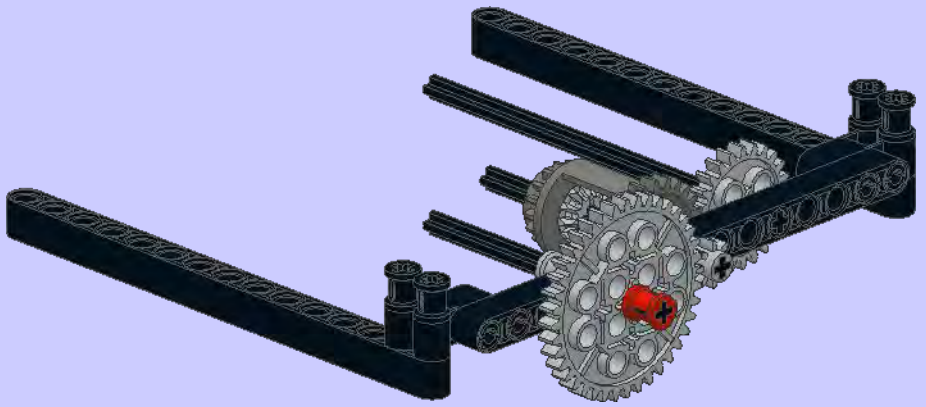

7

2x

4x

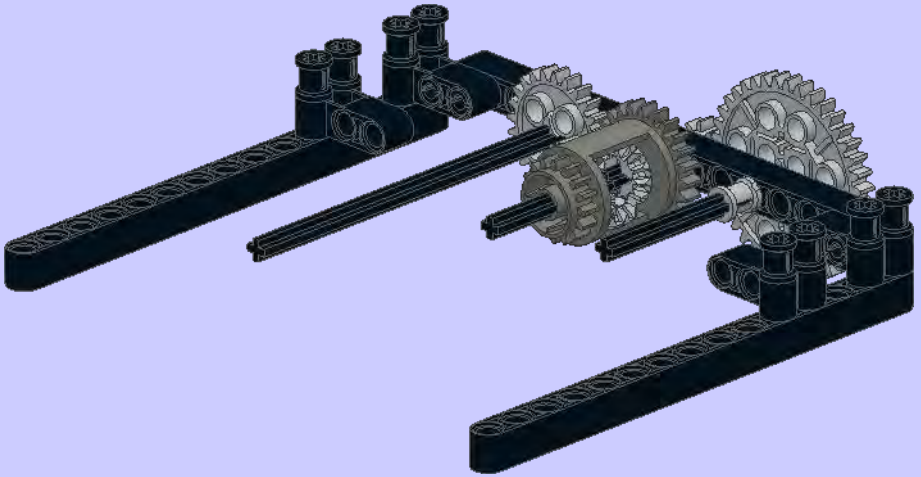

8

15

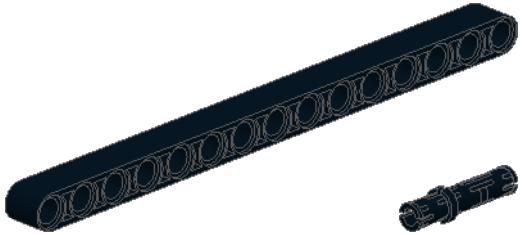



1x

4x

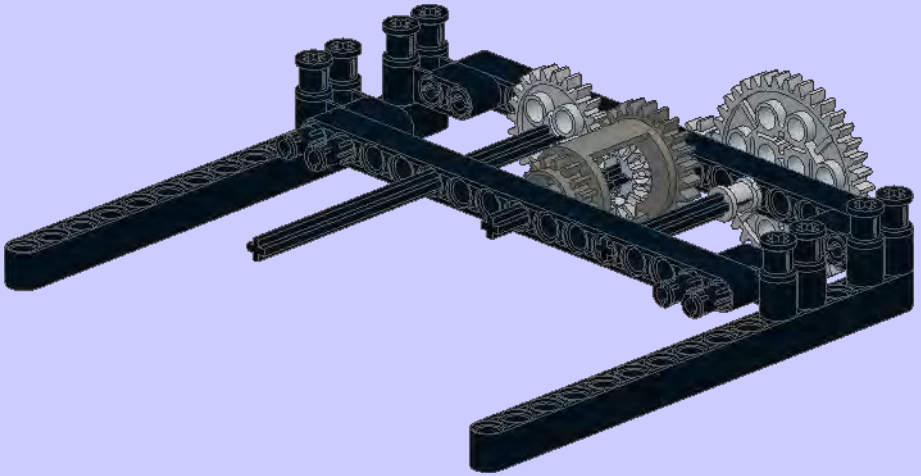

9

2x

4x

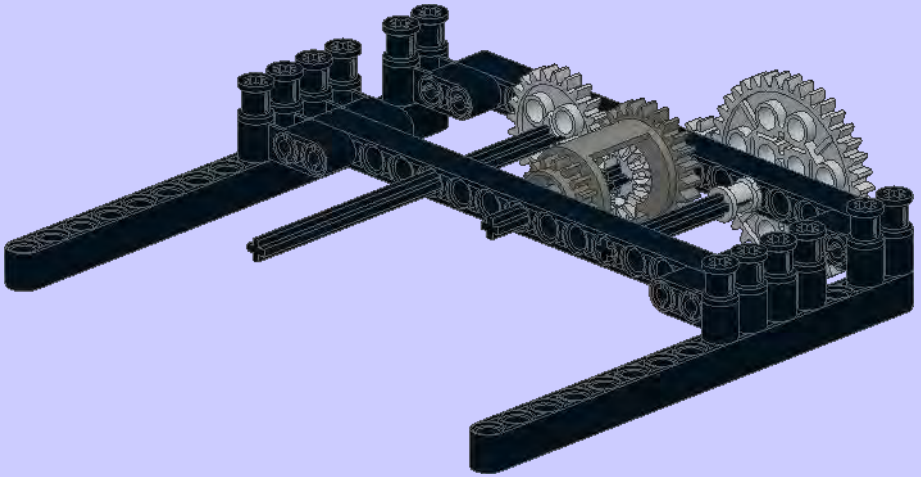

**10**

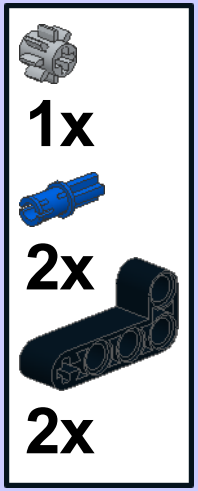


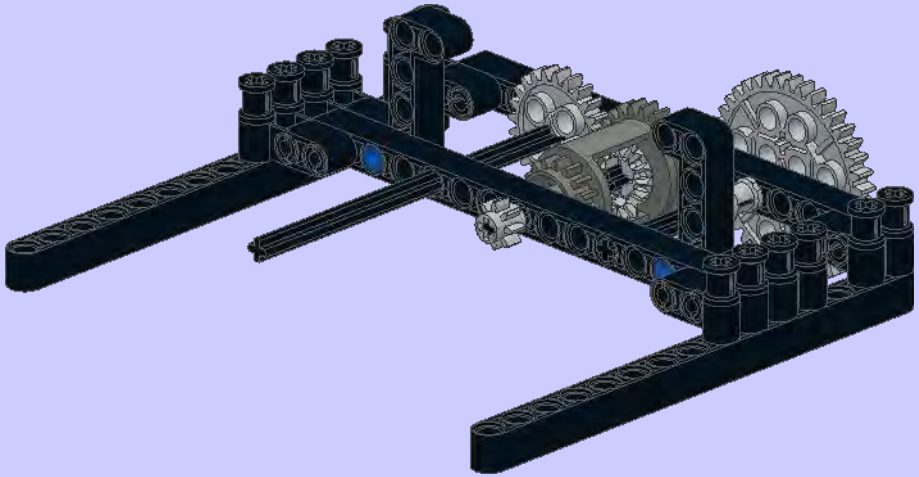

**11**

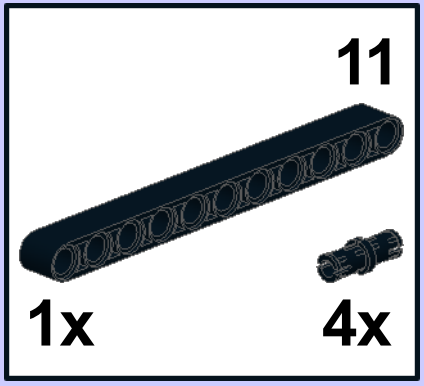

**12**

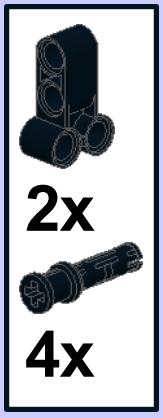


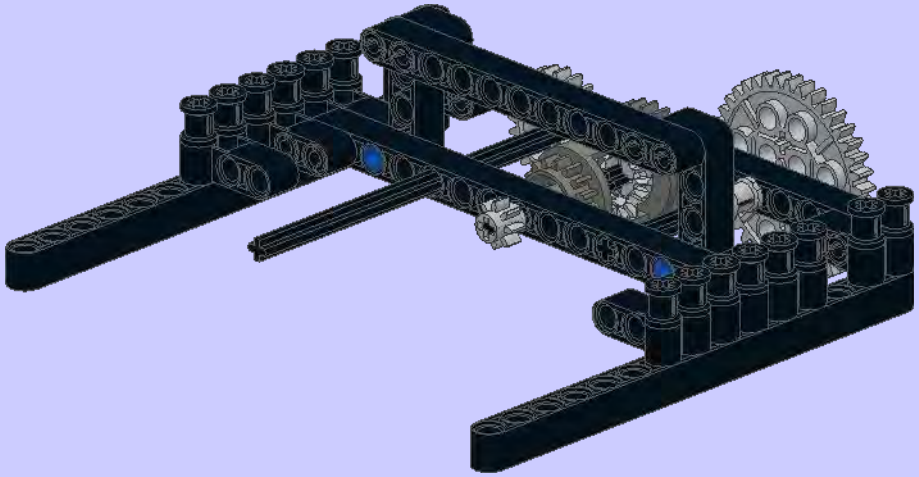

13

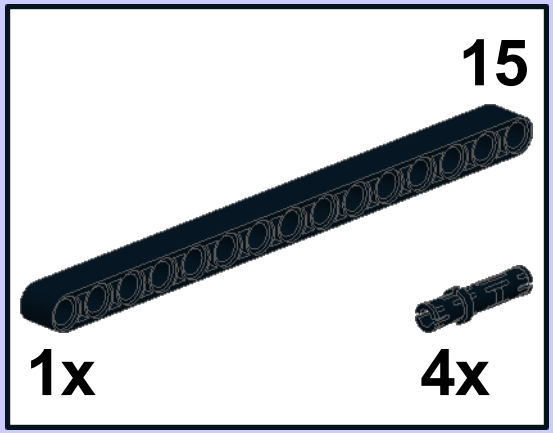


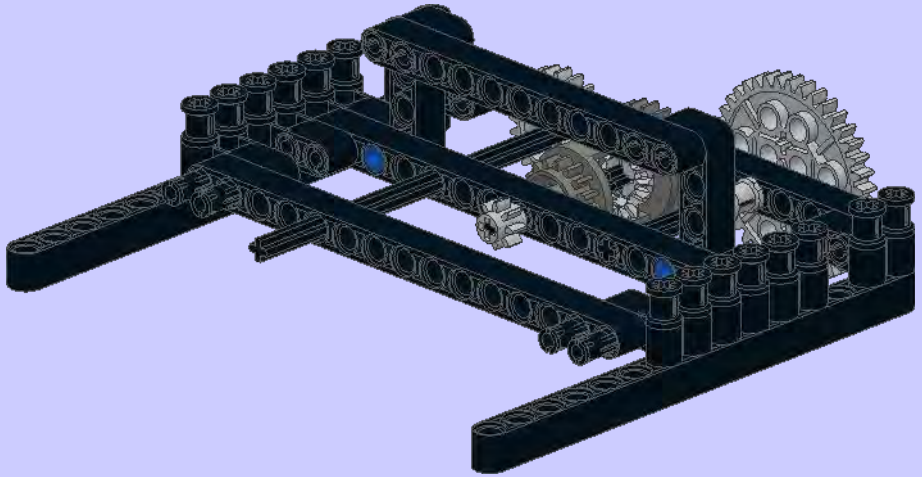

14

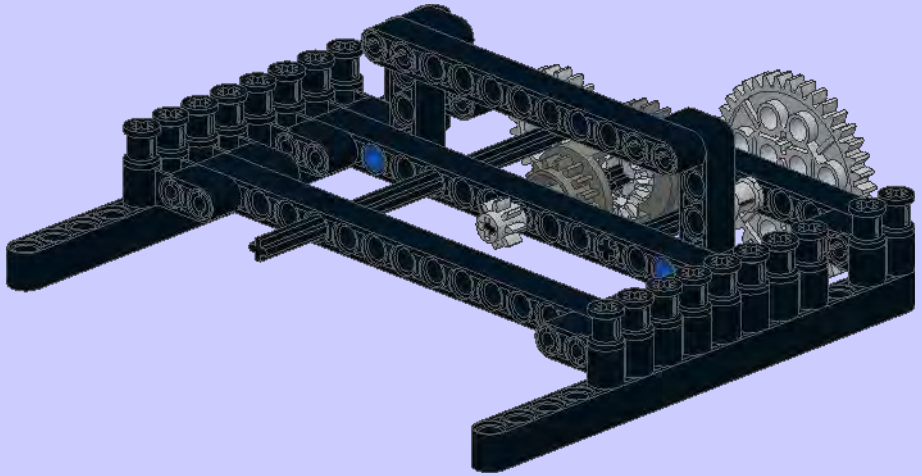

15

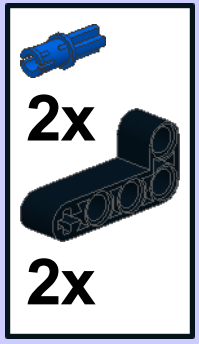


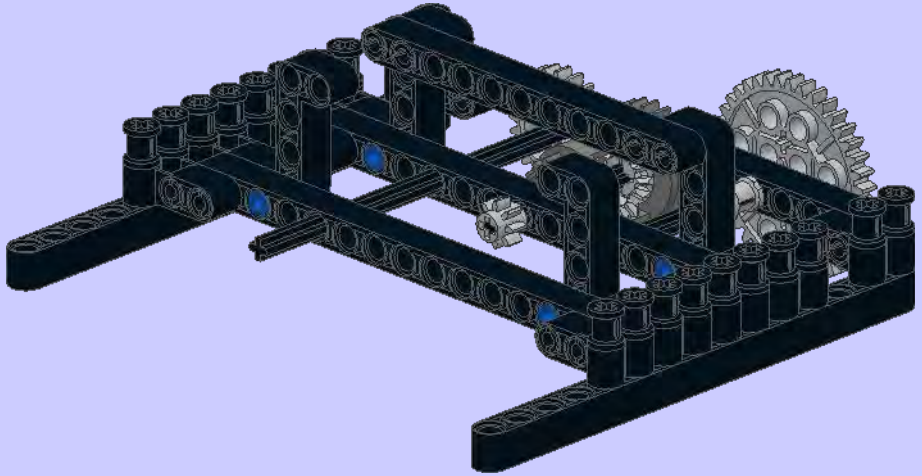

**16**

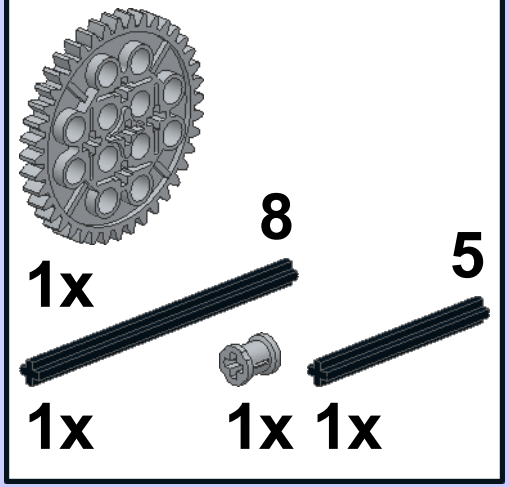


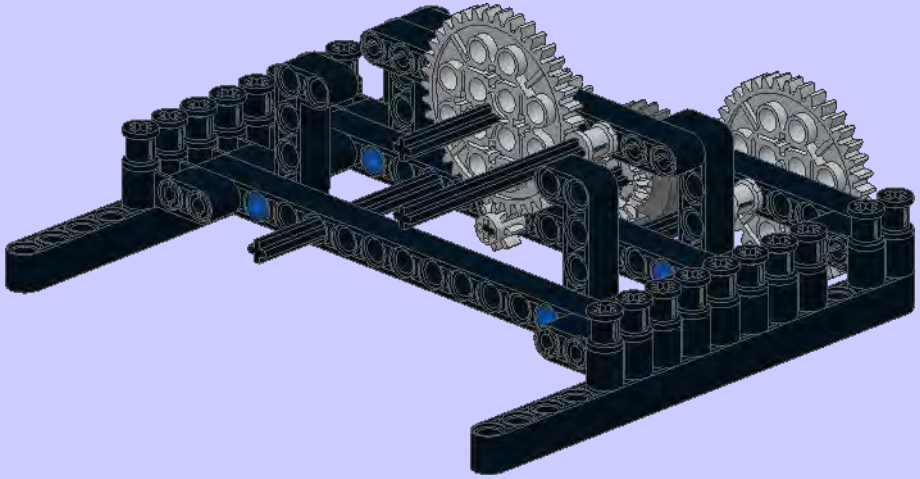

**17**

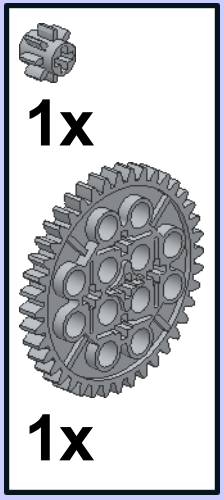


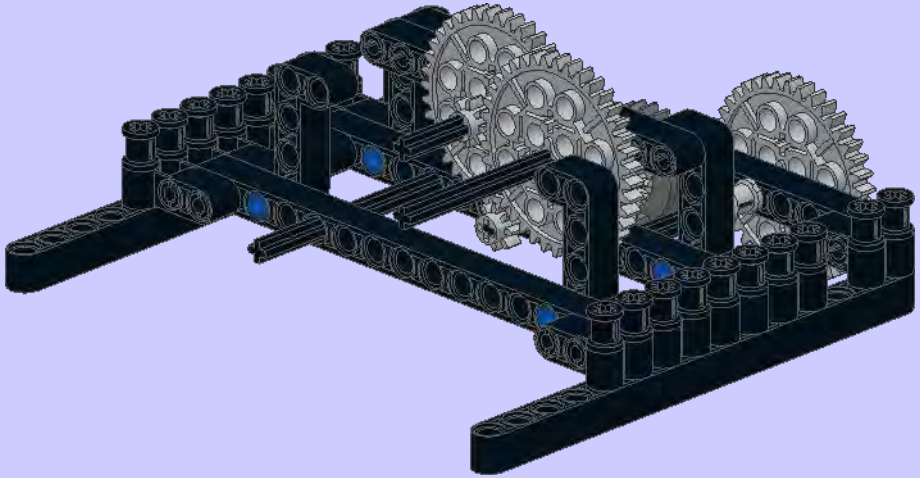

**18**

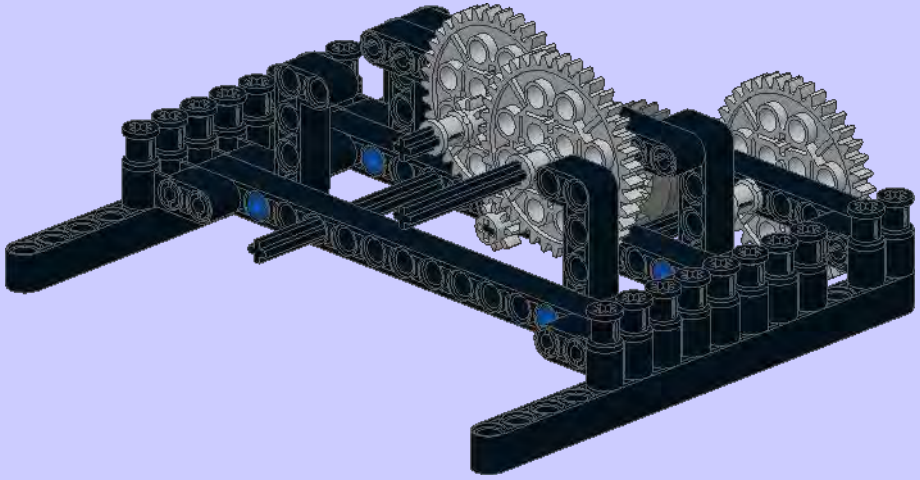

**19**

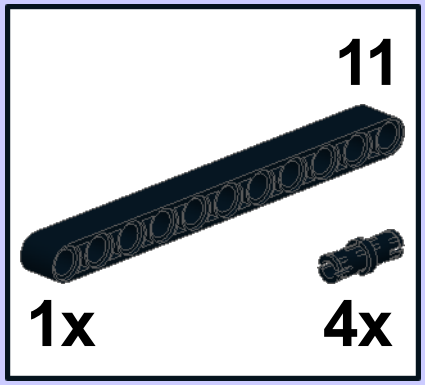


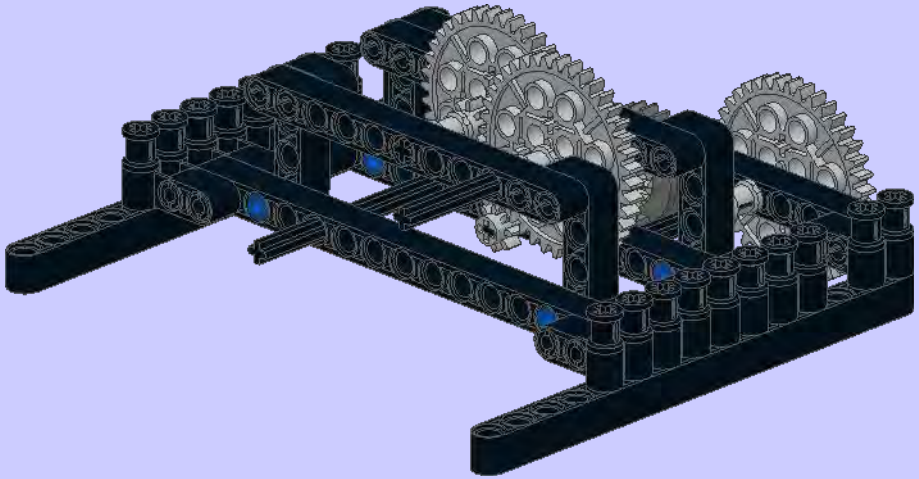

**20**

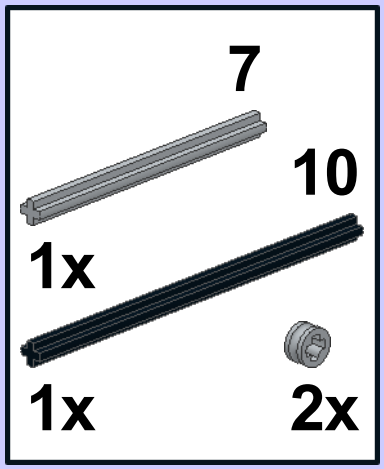


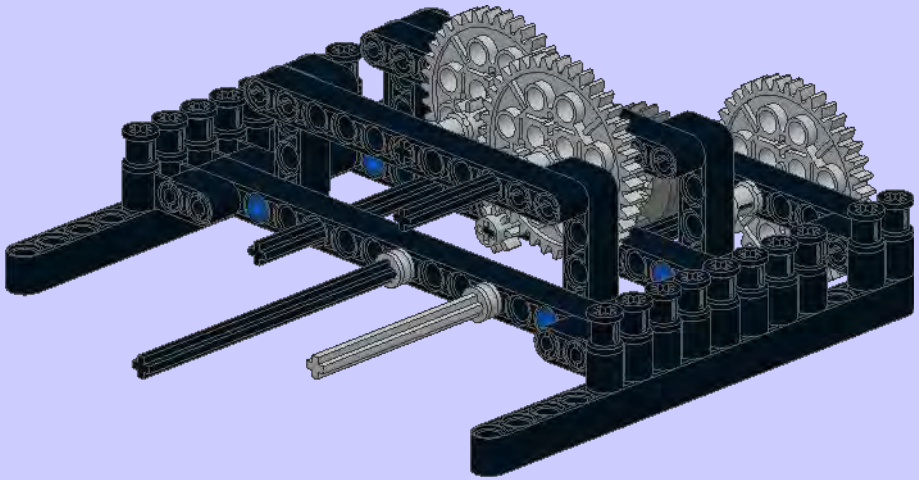

**21**

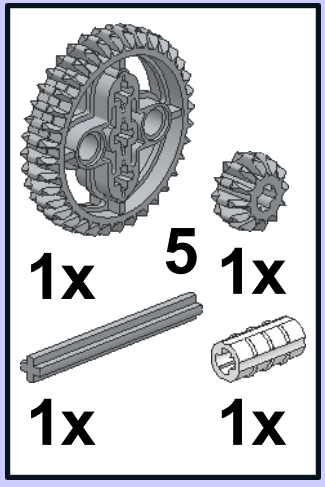


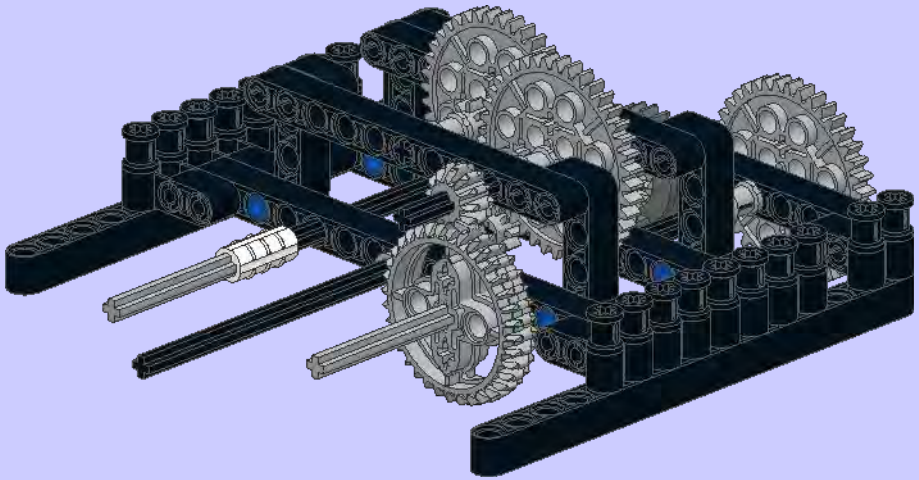

**22**

1x

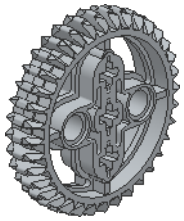

2x

1x 1x

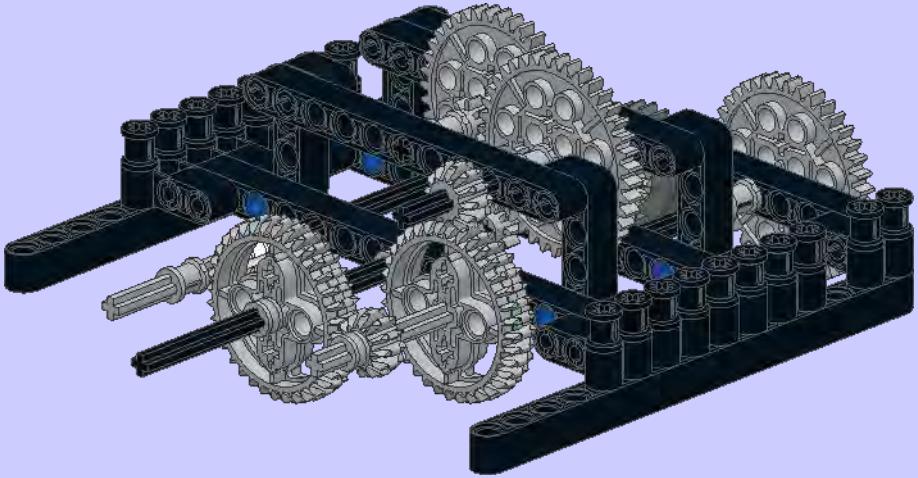

**23**

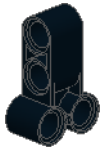
2x

4x

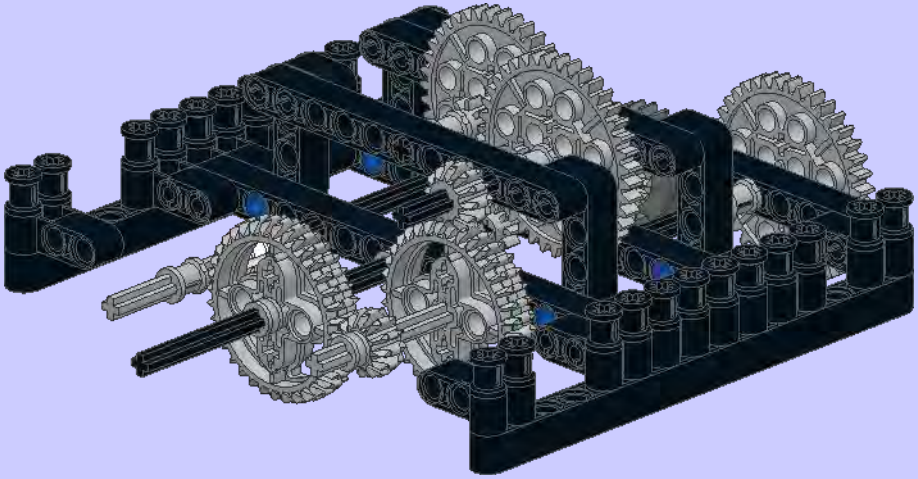

**24**

4x

2x

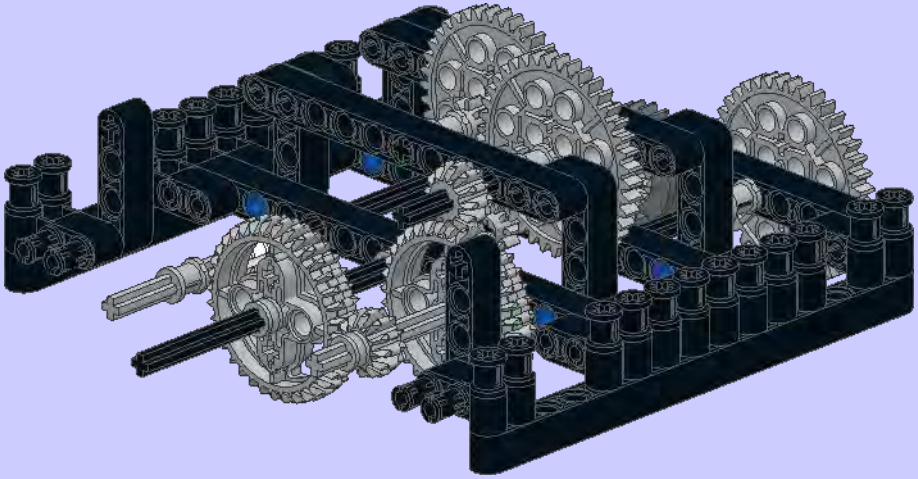

**25**

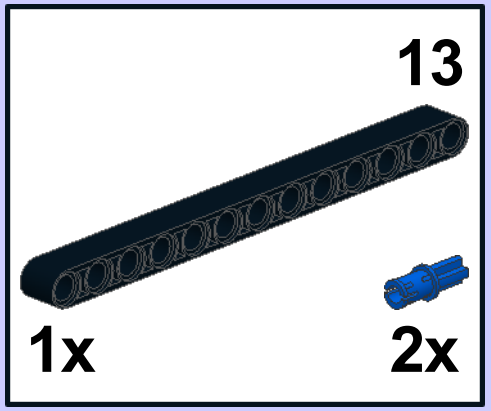


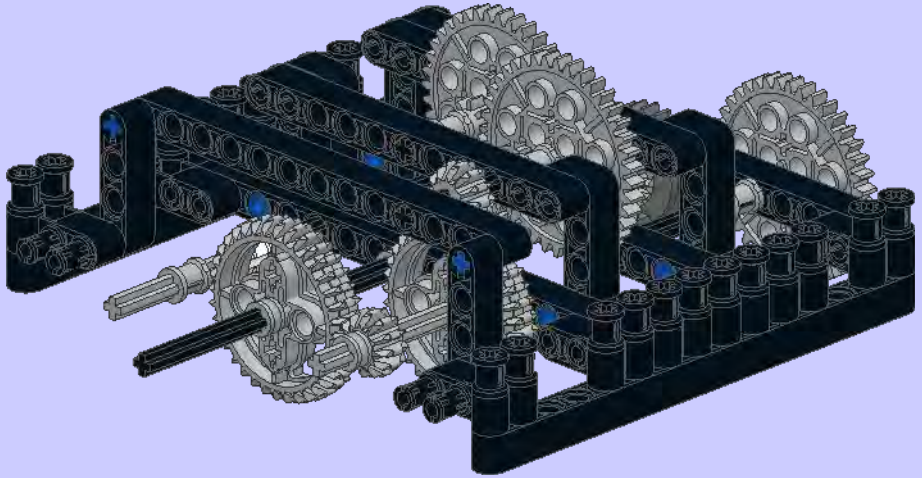

**26**

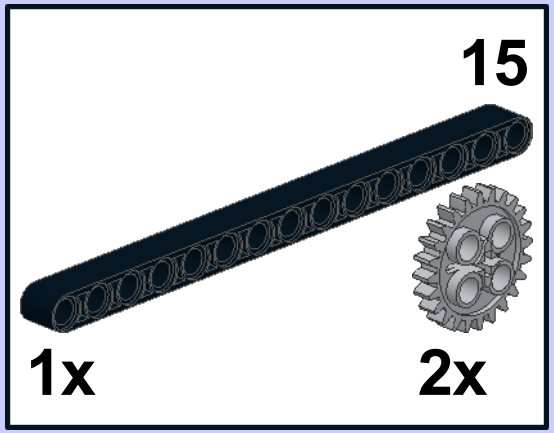


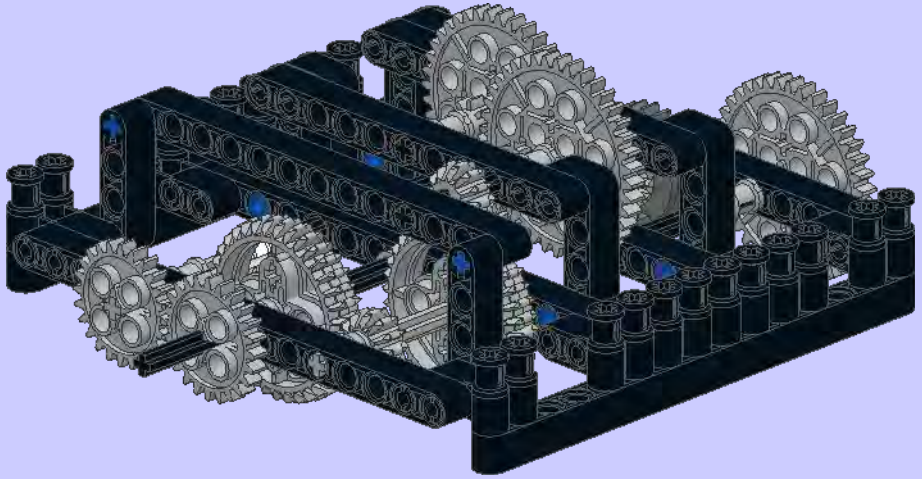

27

8x

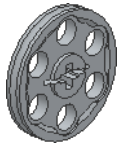

1x

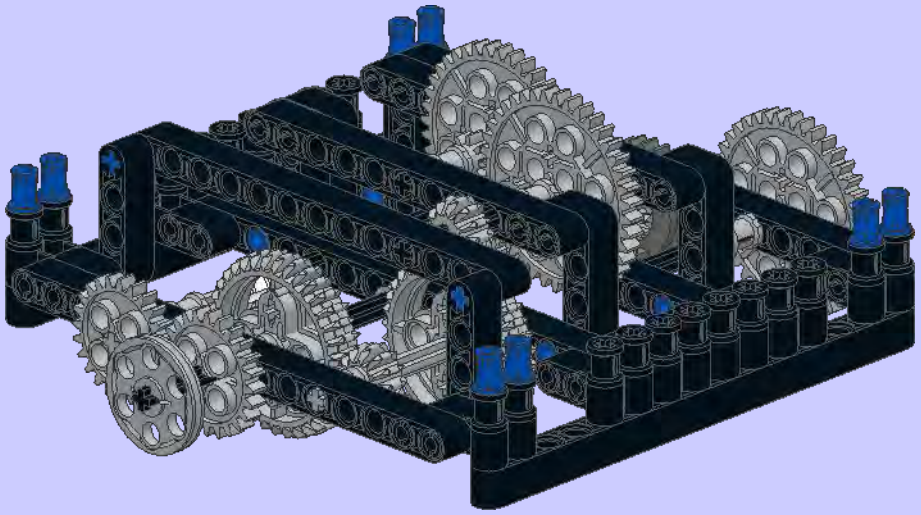

28

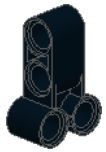

4x

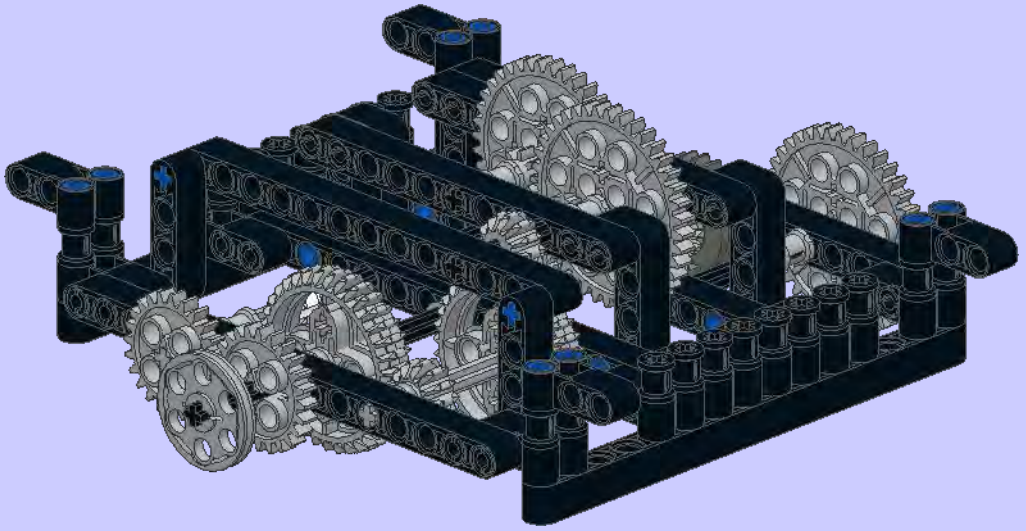

5

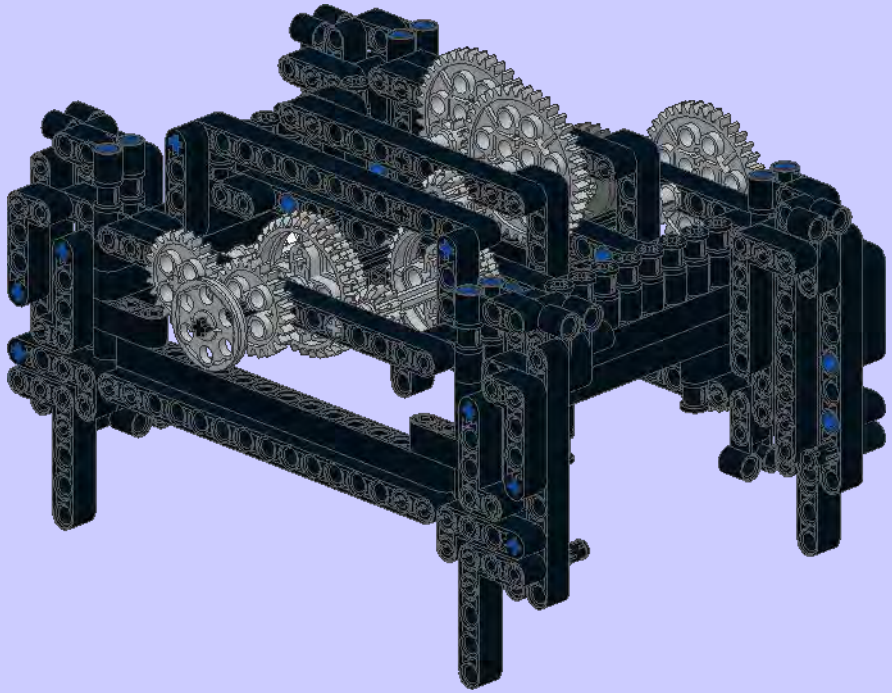

6

6x

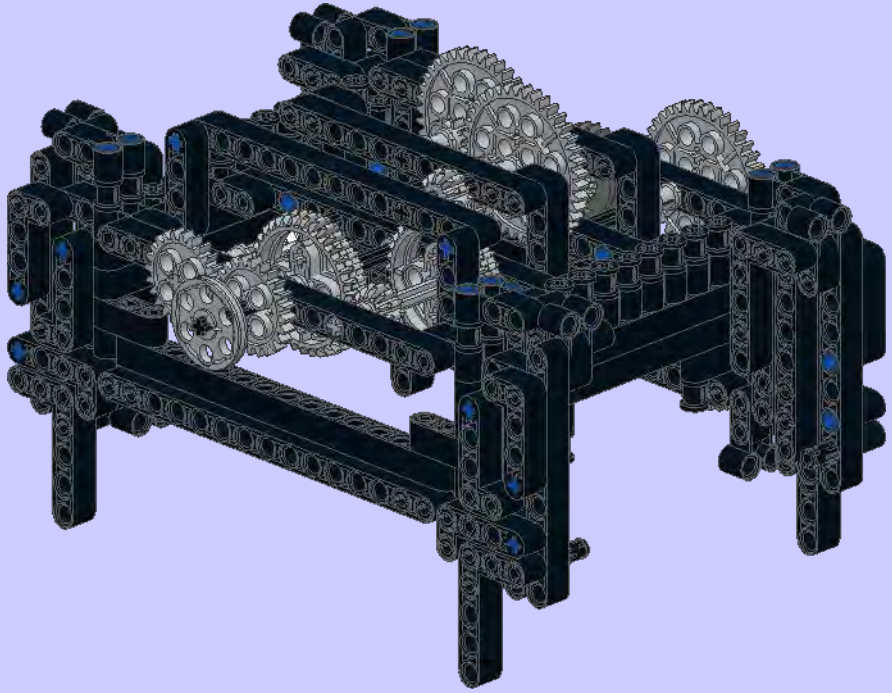

7

4x

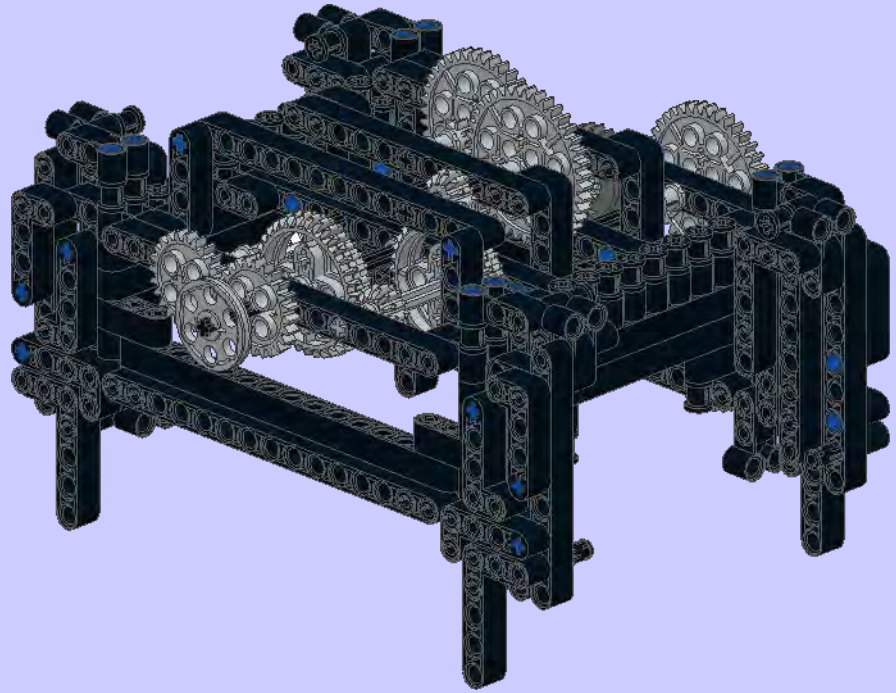

8

1x

2x

3

1x

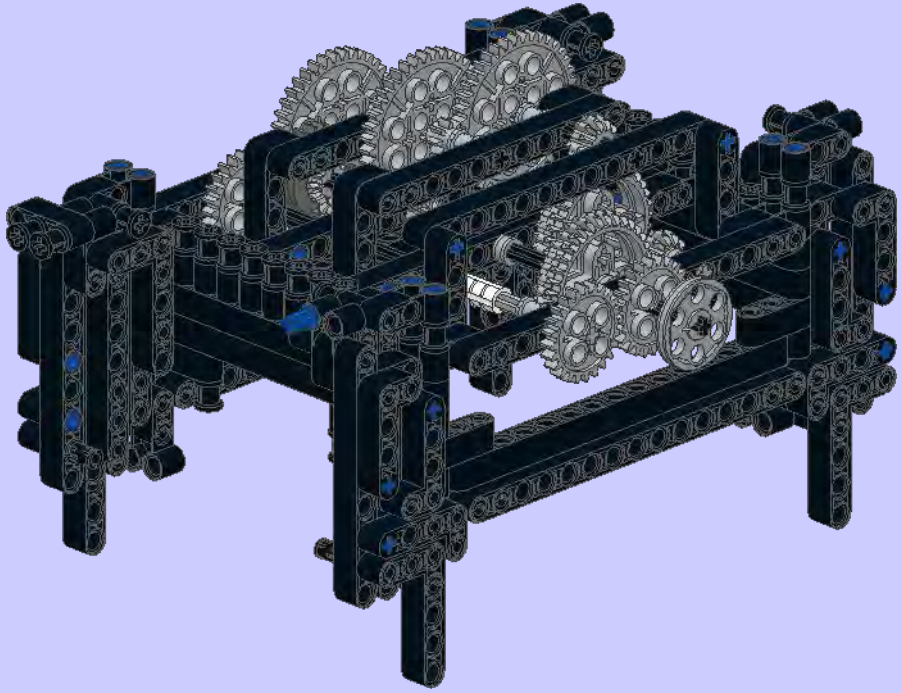

**9**

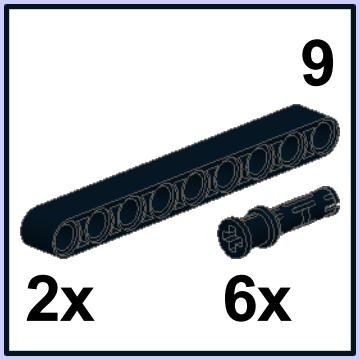


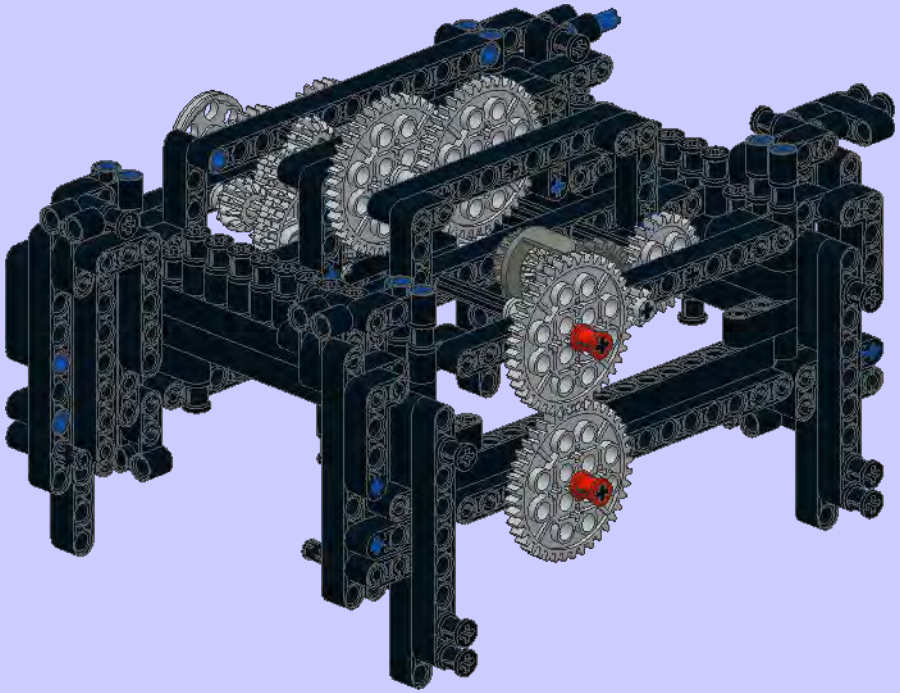

**10**

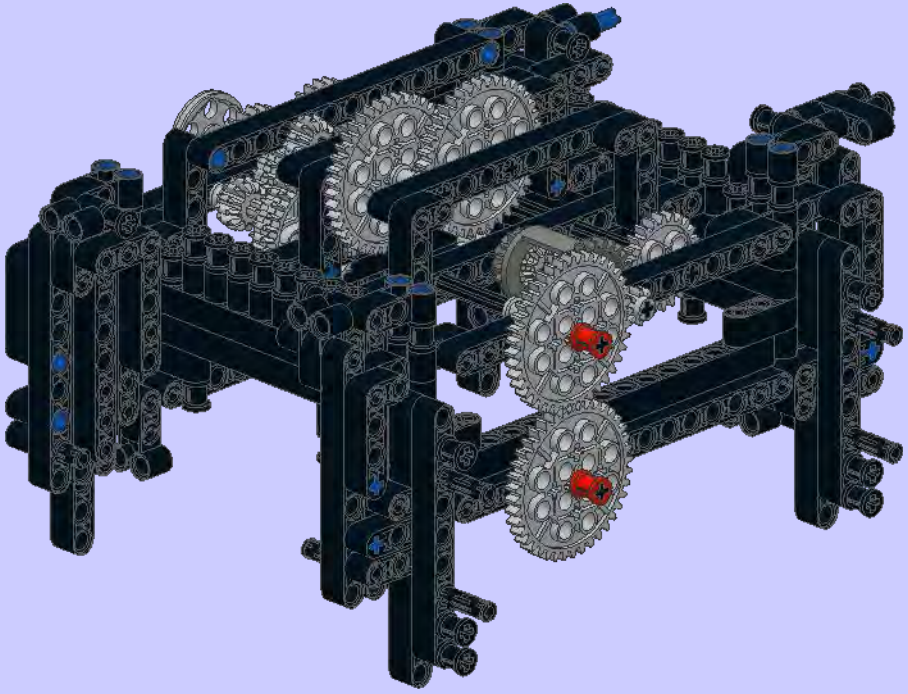

11

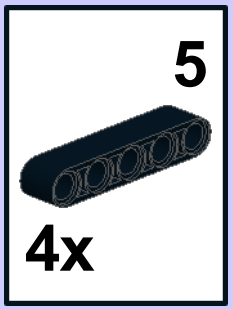


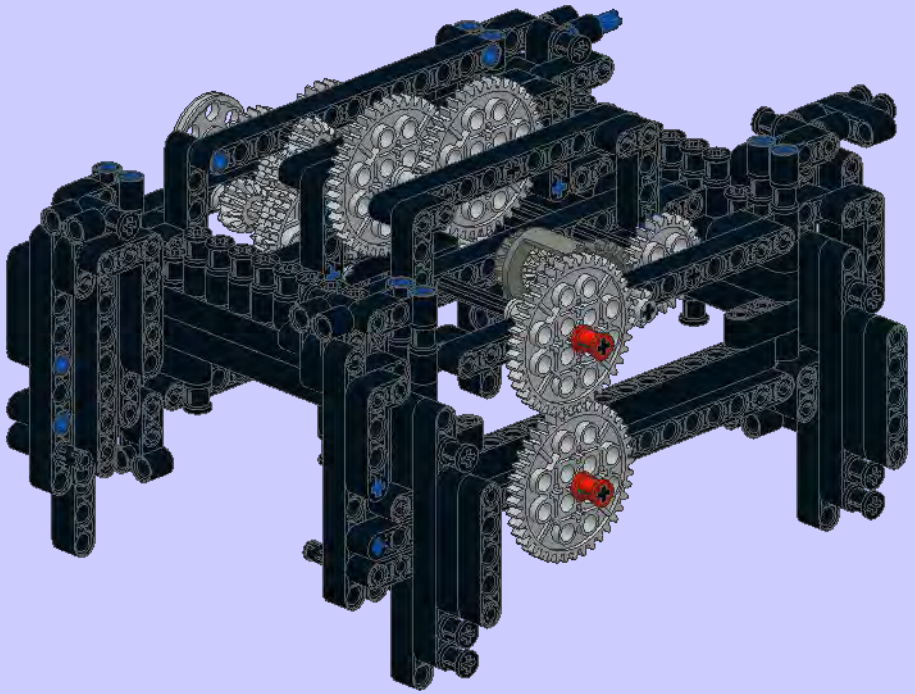

12

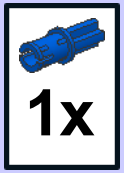


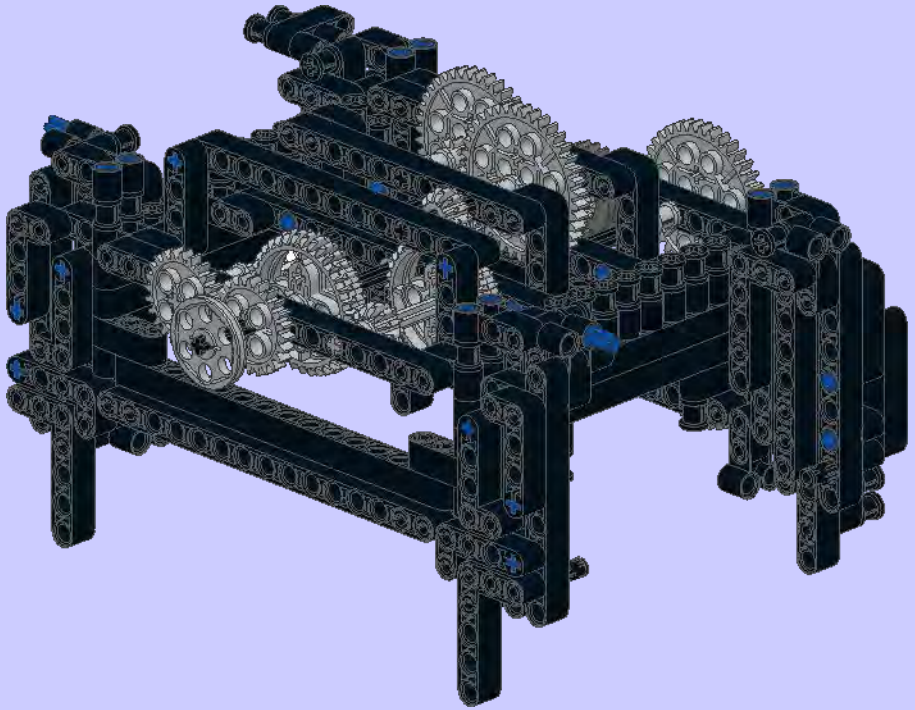

13

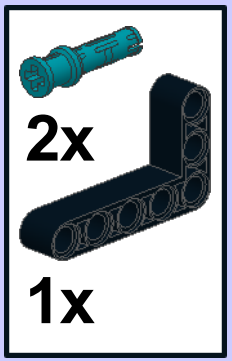


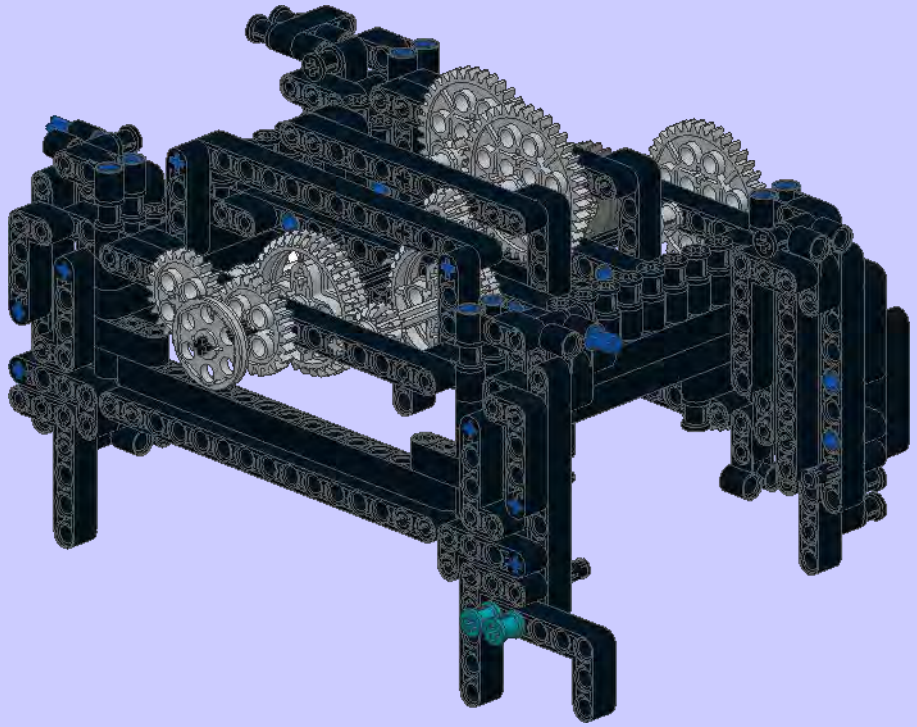

14

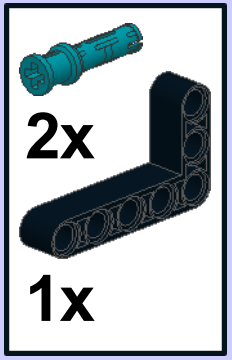


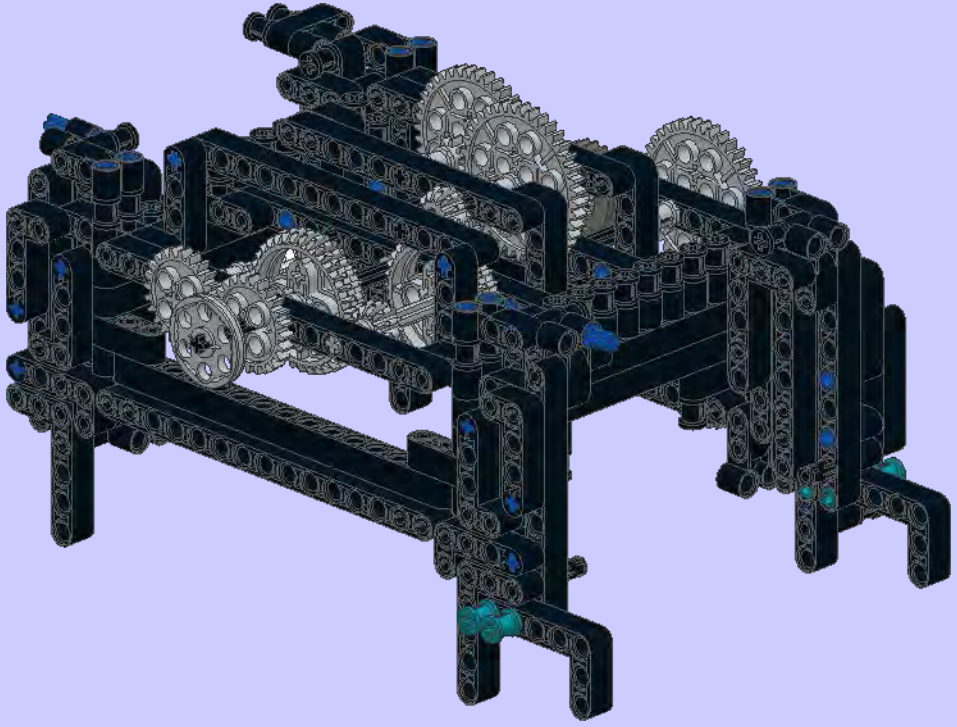

1

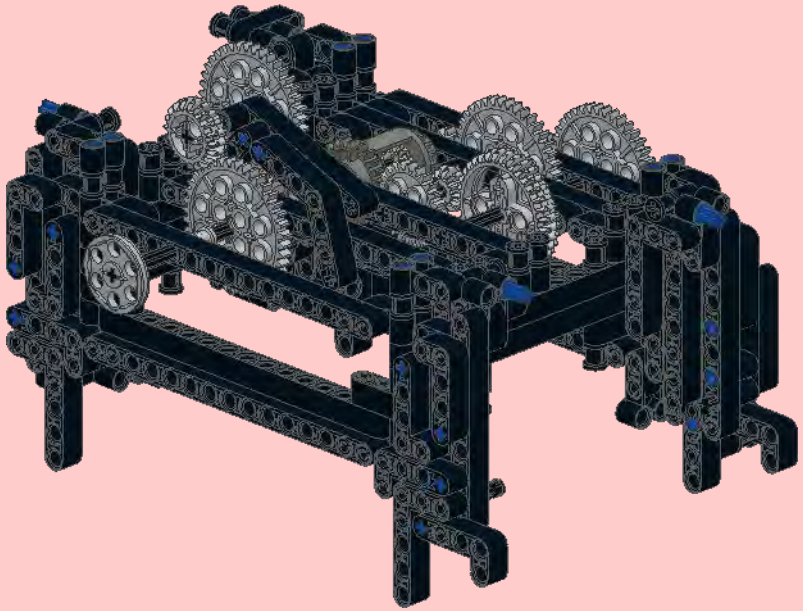

2

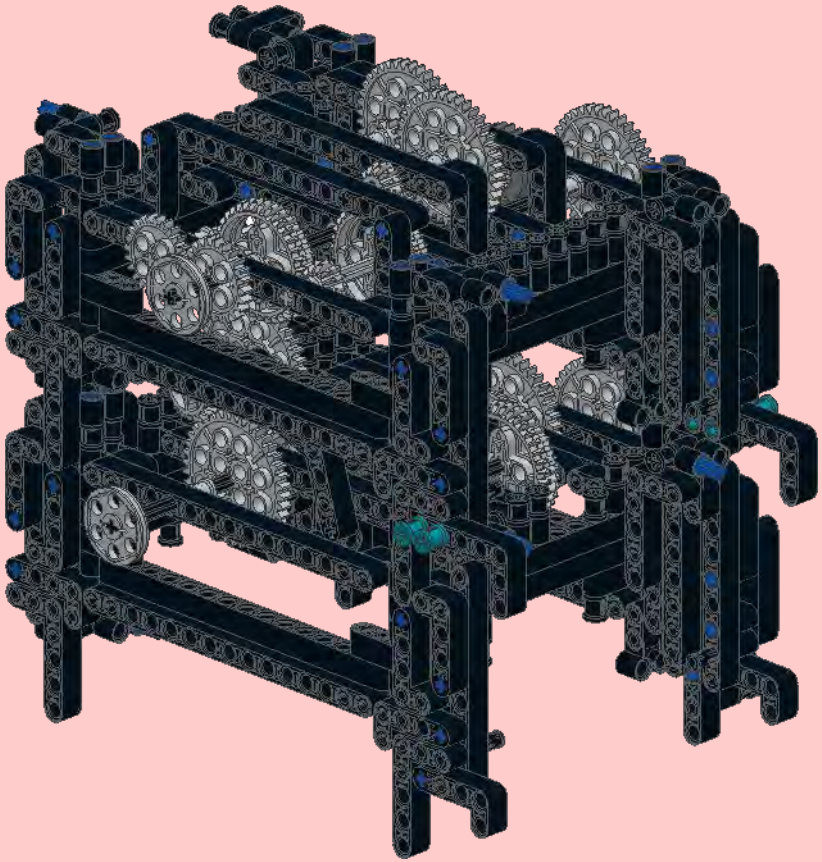

3

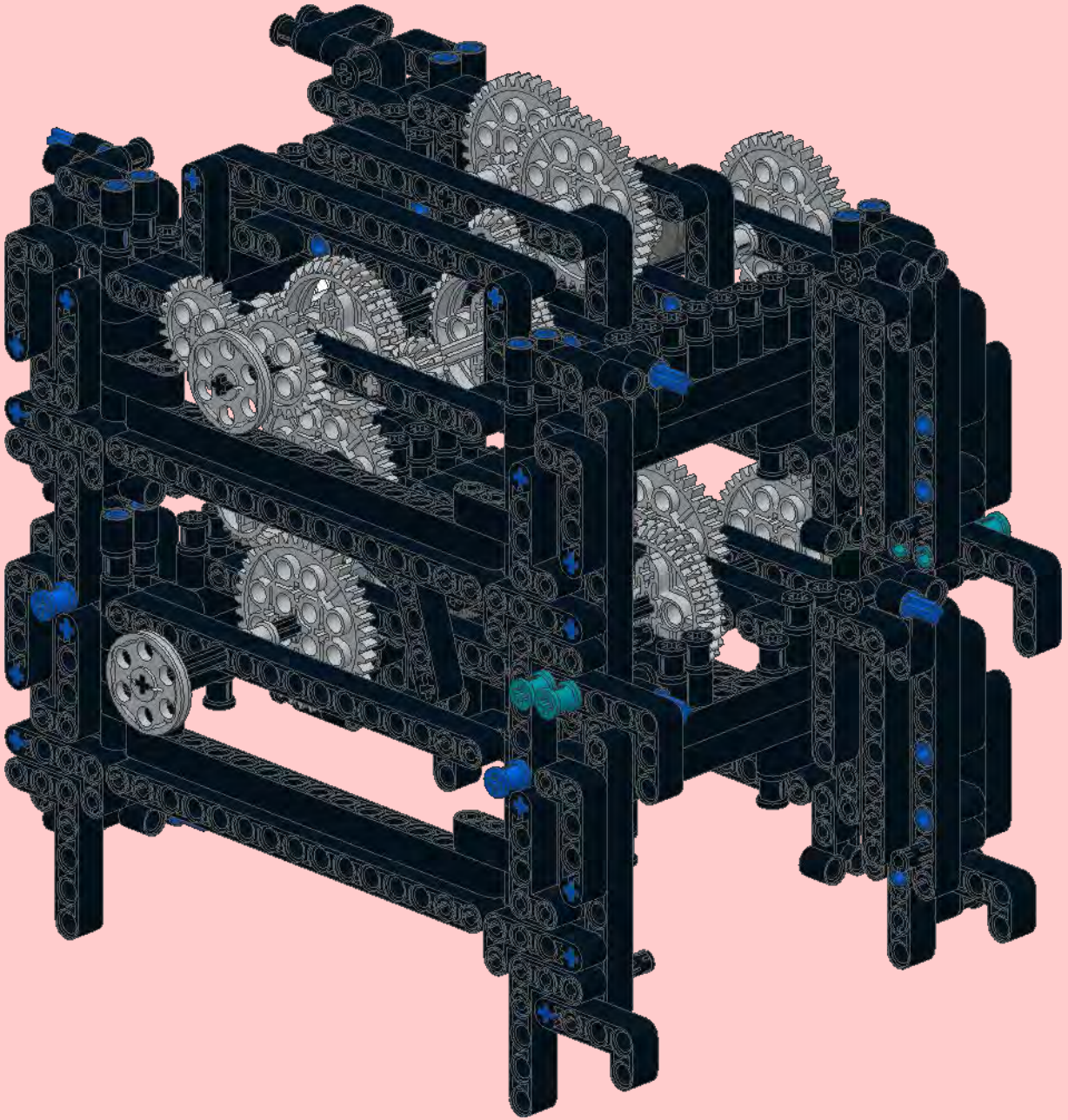

4

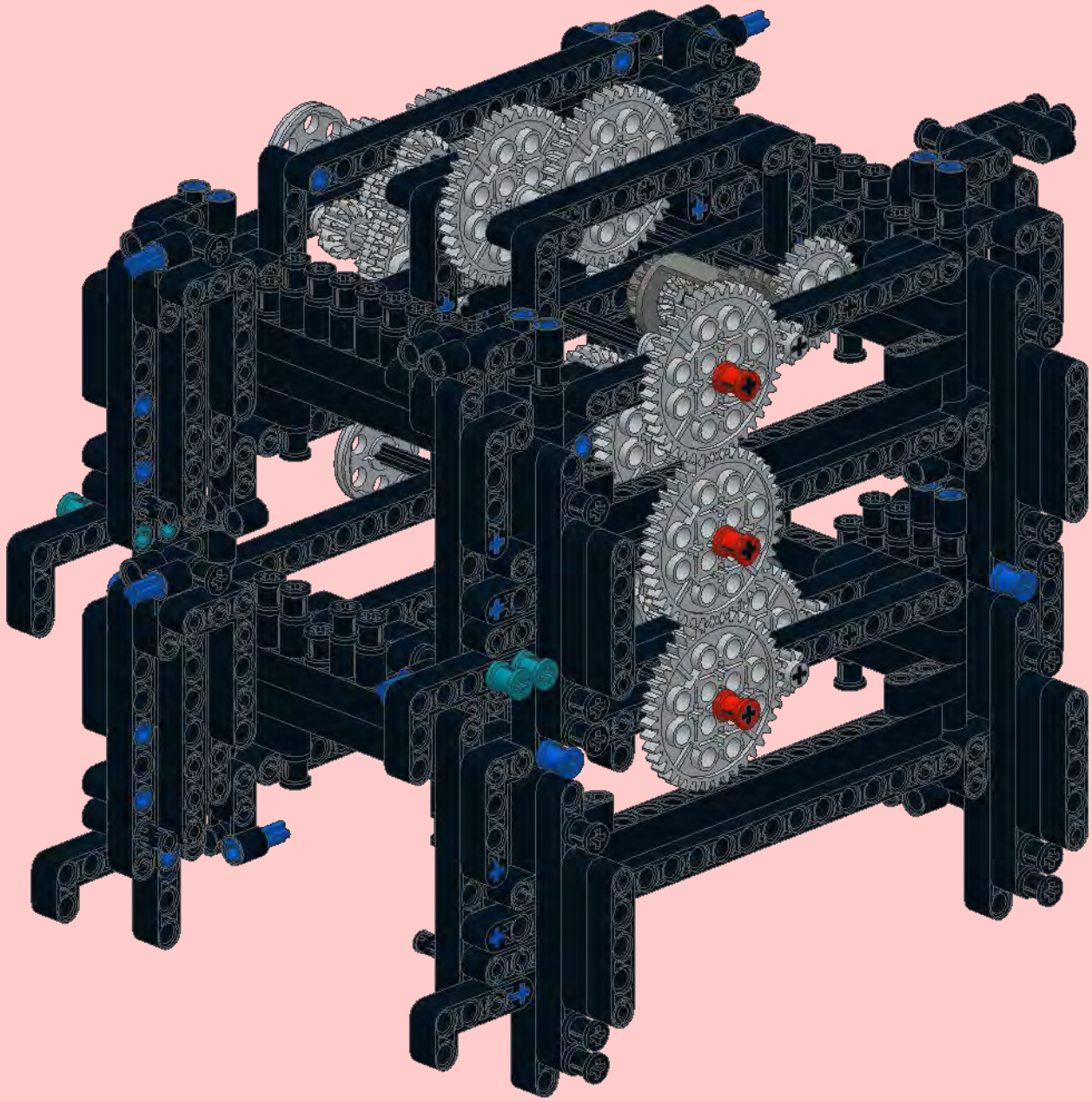

1

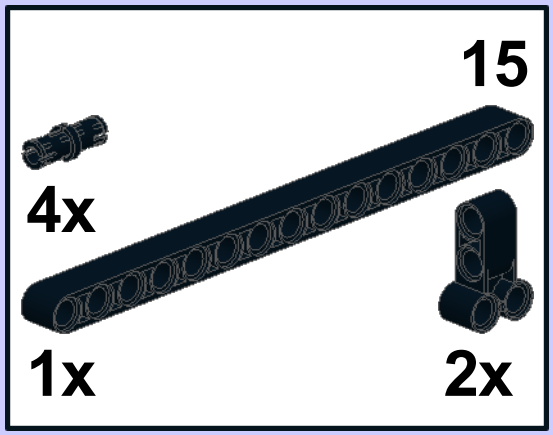


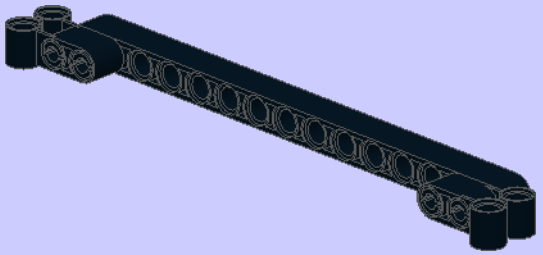

2

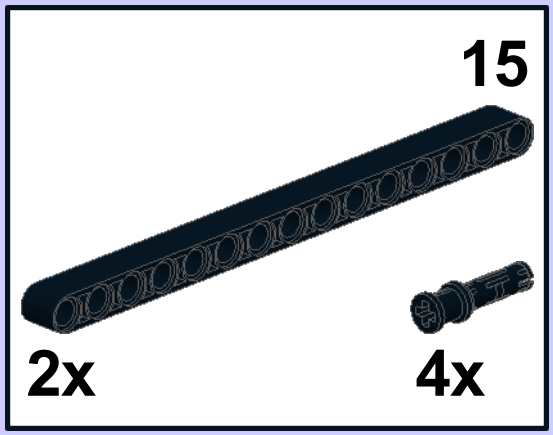


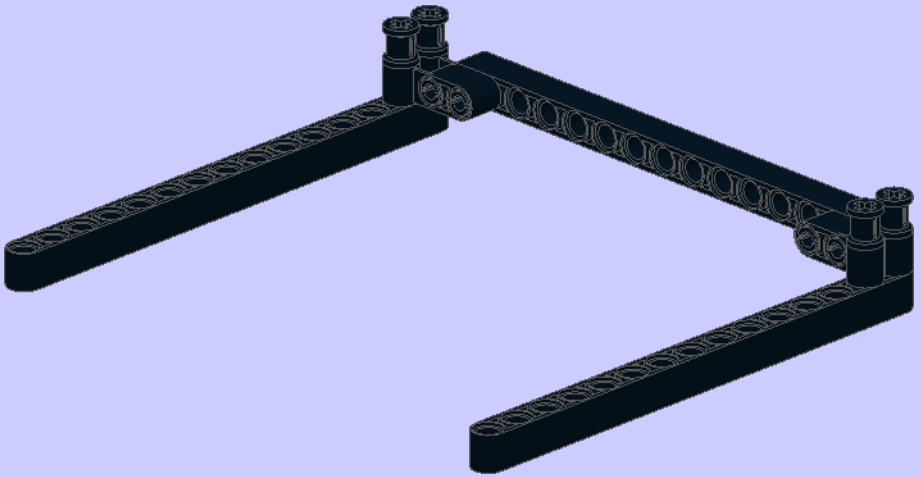

3

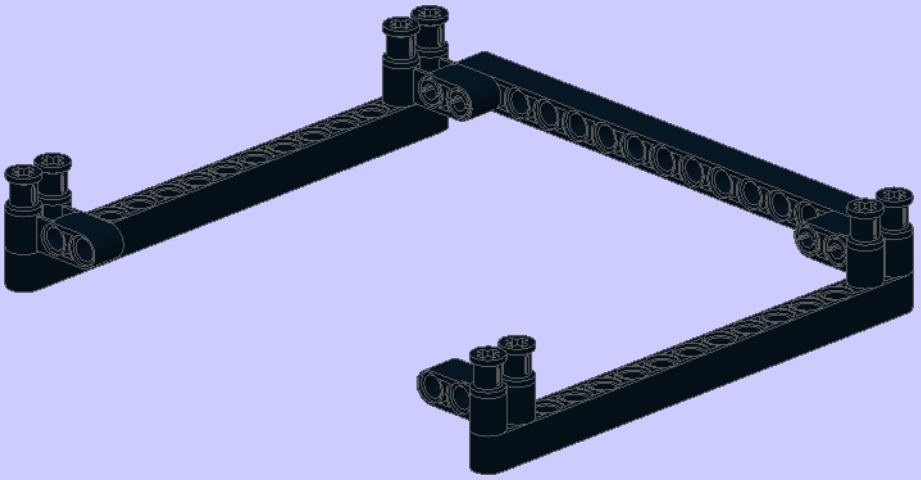

4

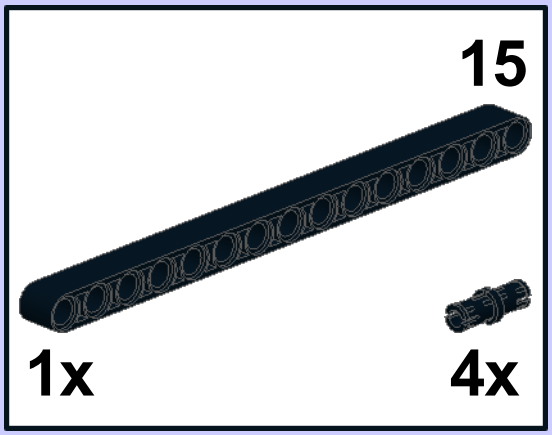


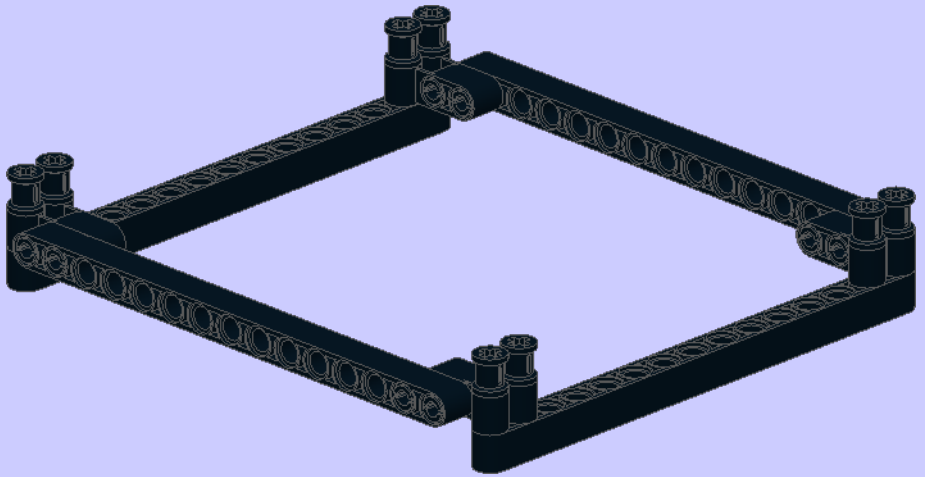

5

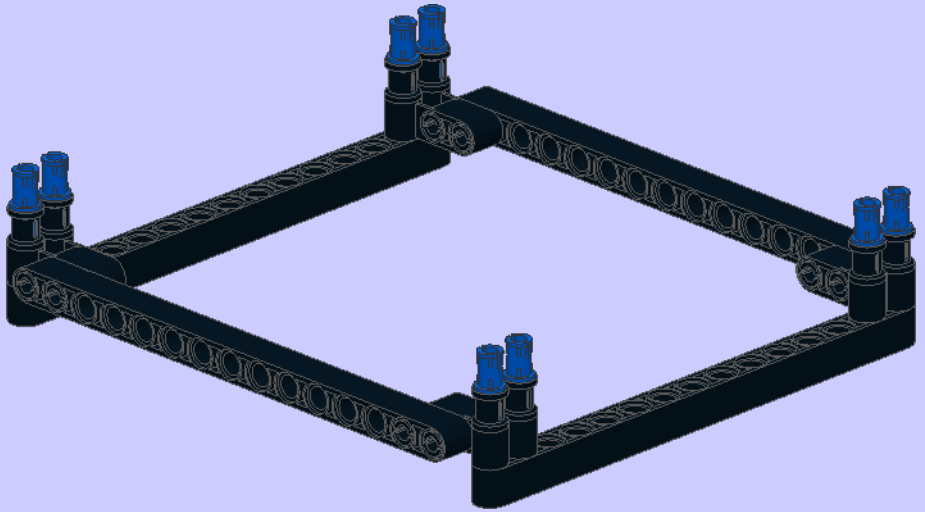

6

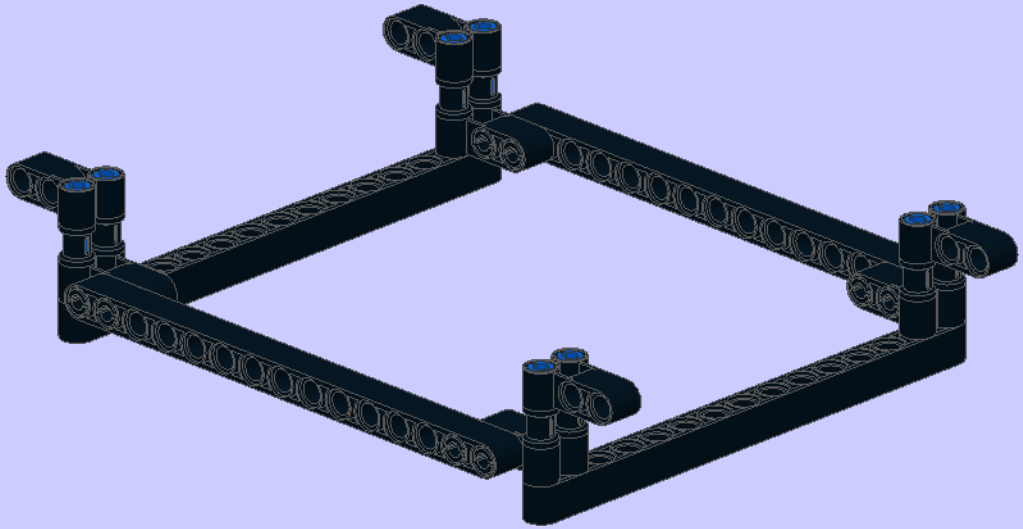

1

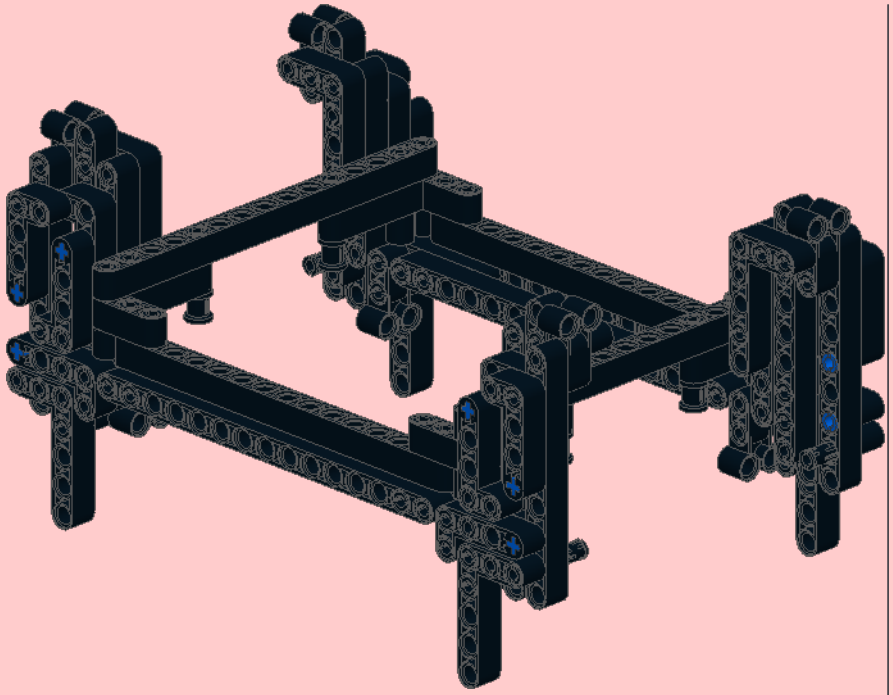

2

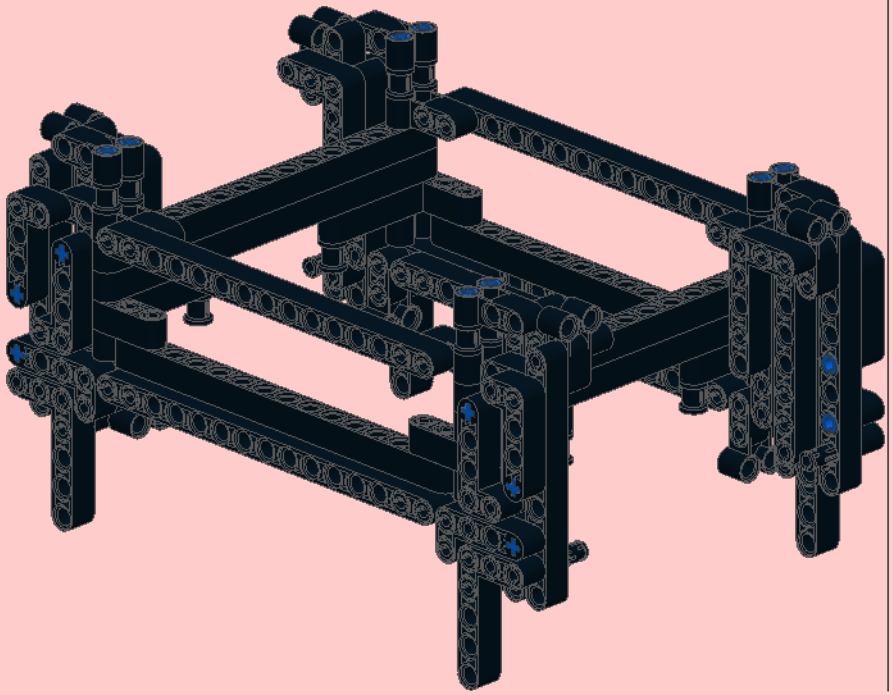

3

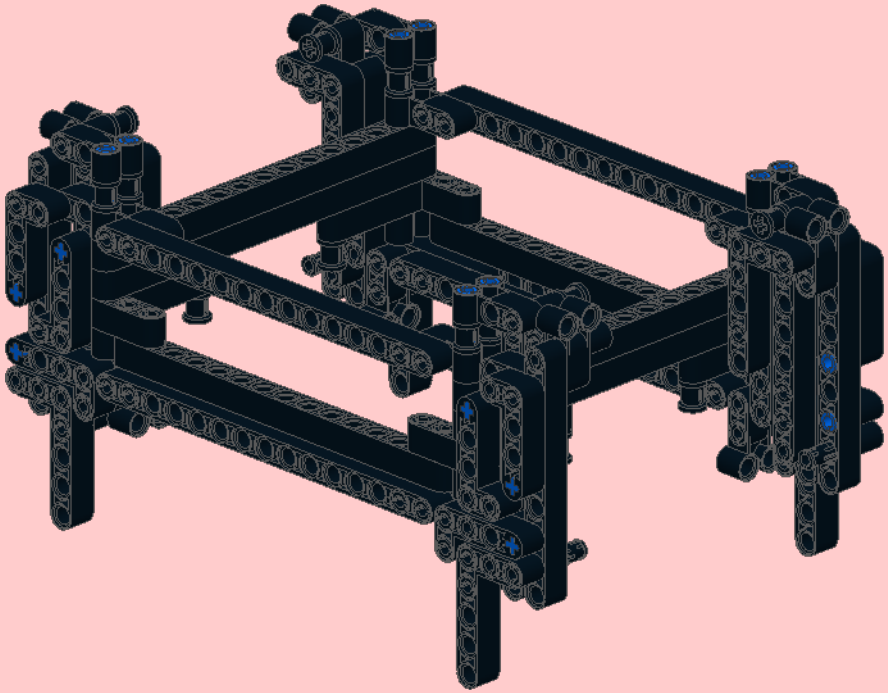

4

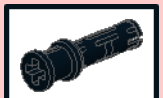

4x

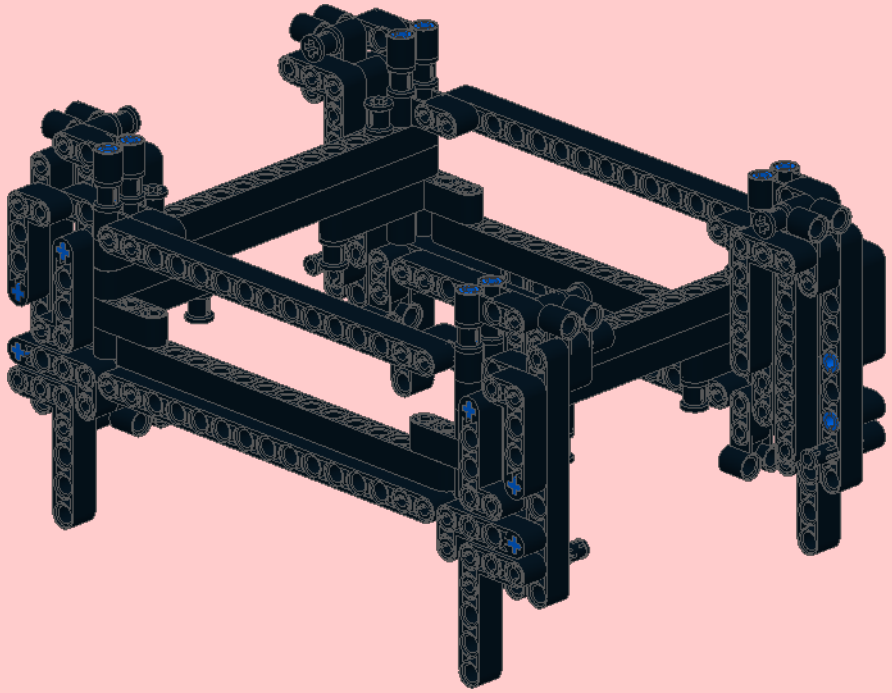

5

4x

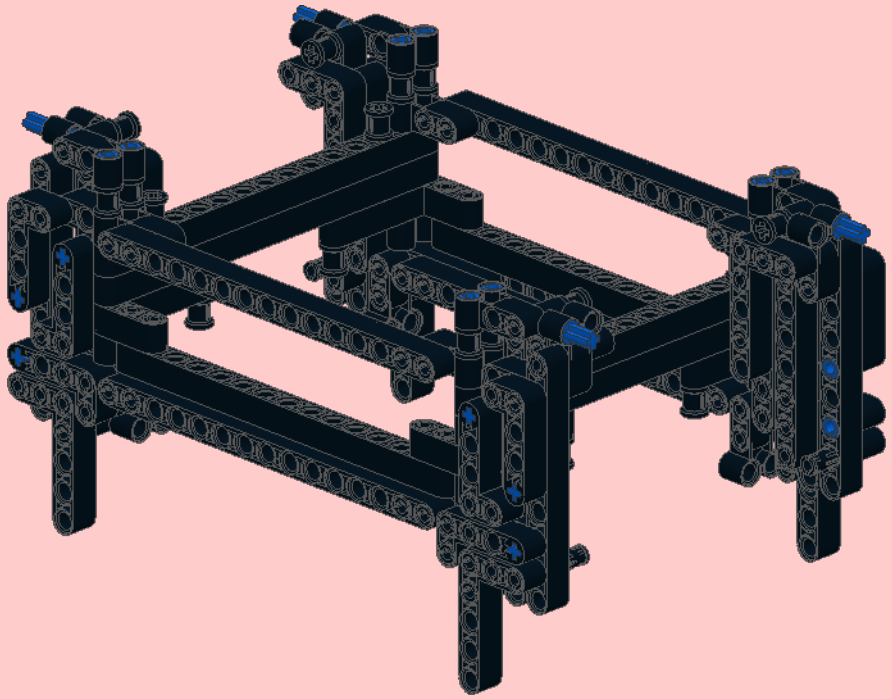

1

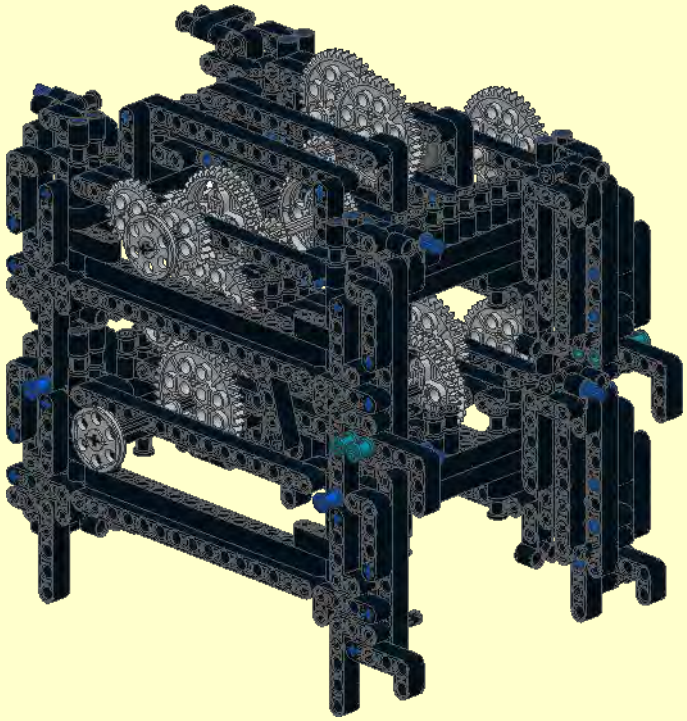

2

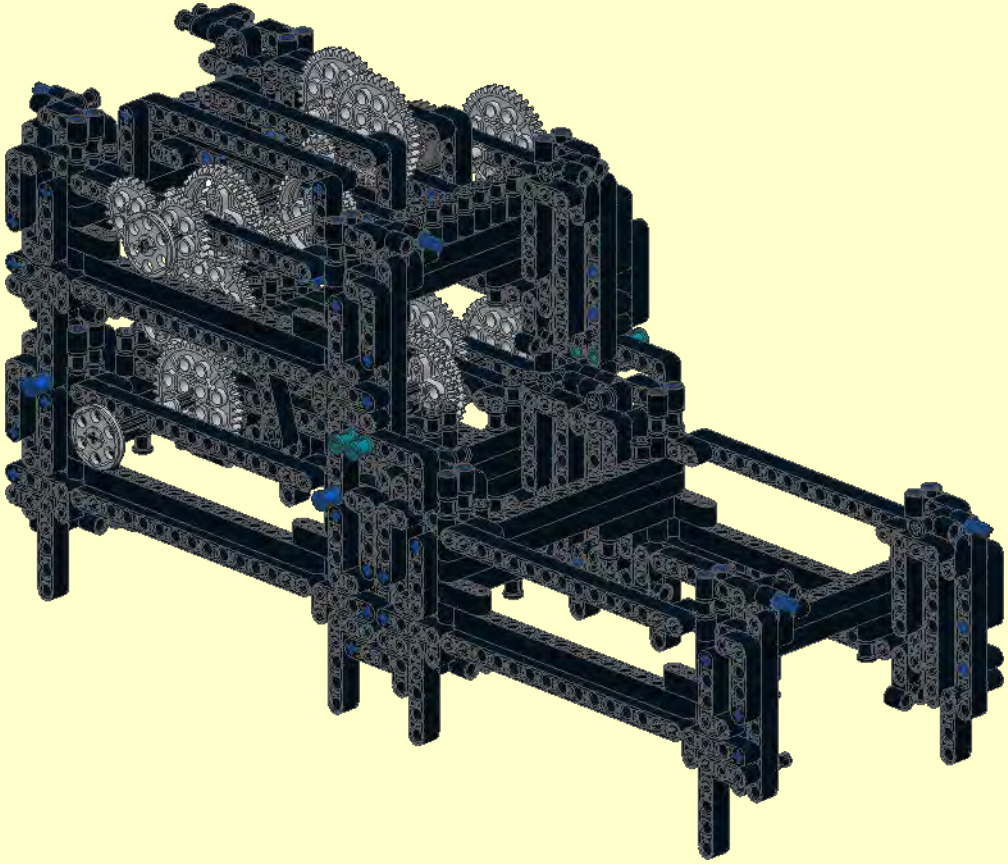

3

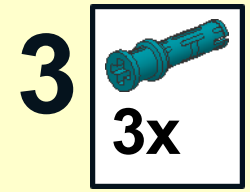


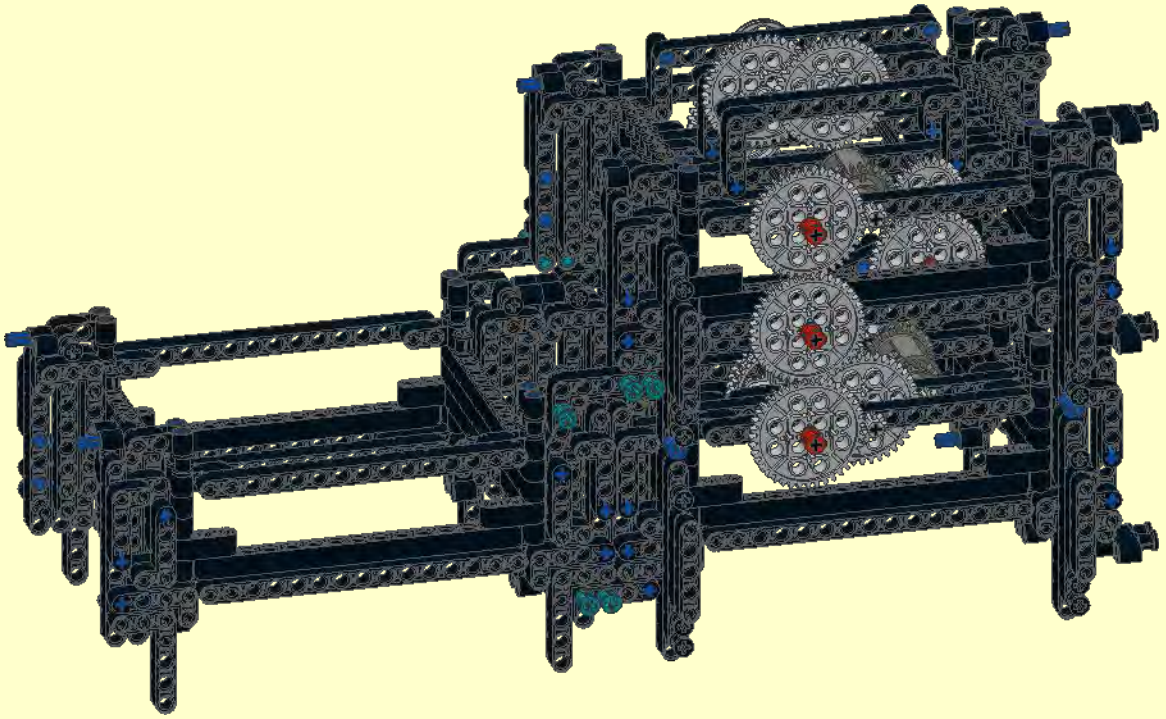

4

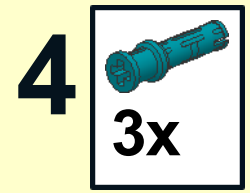


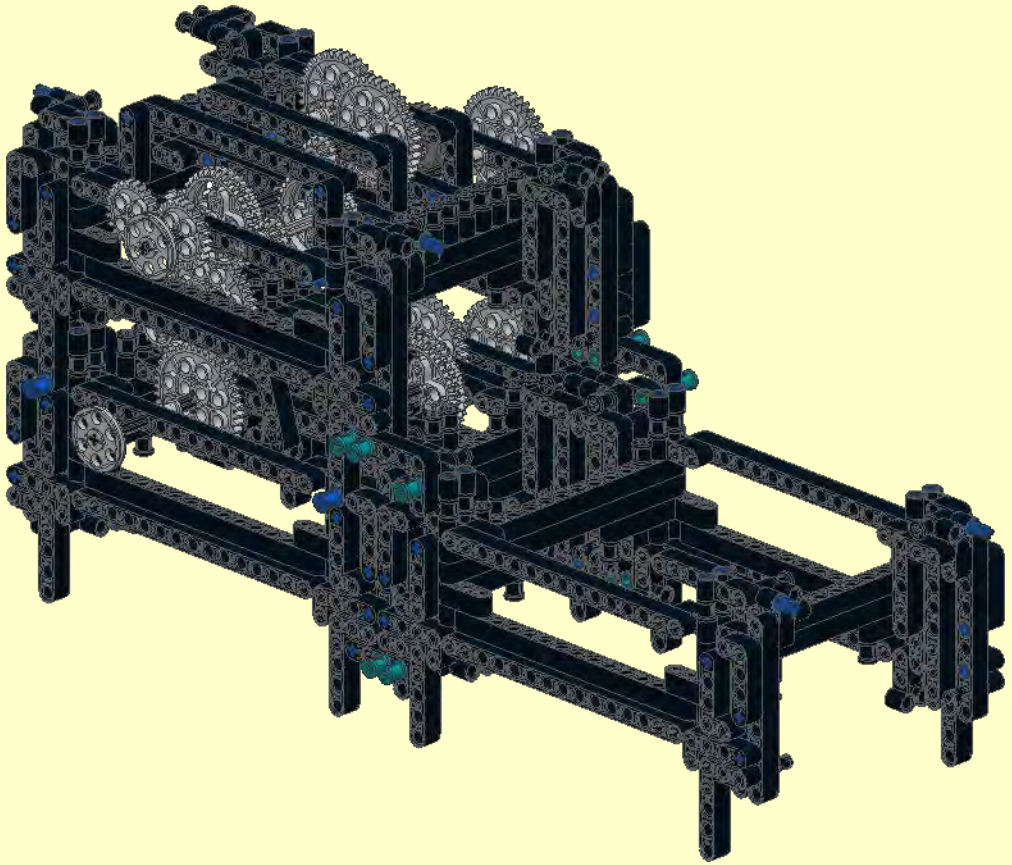

1

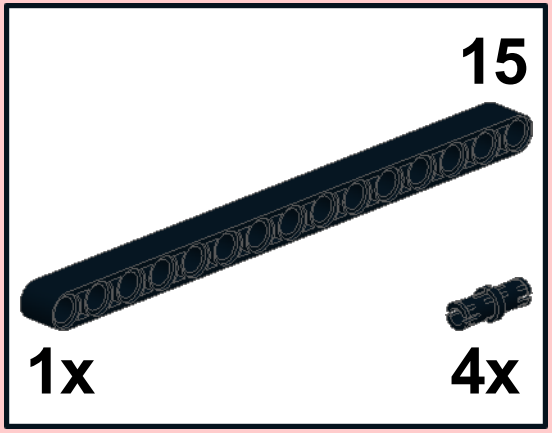


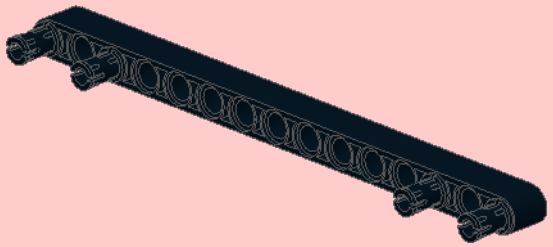

2

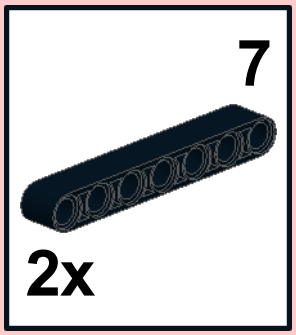


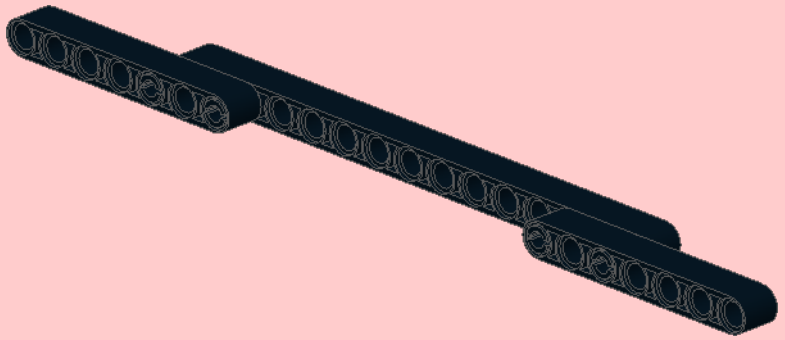

3

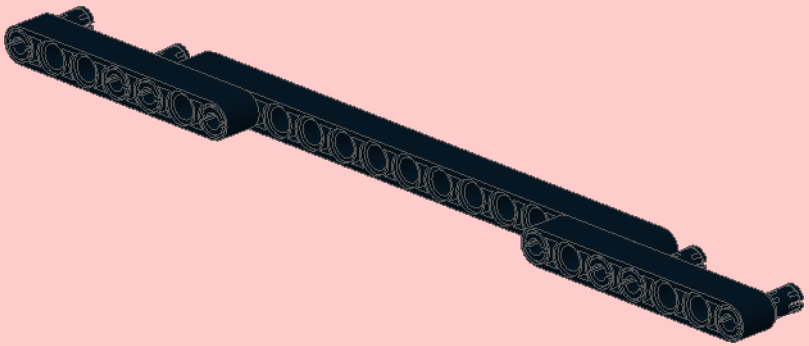

4

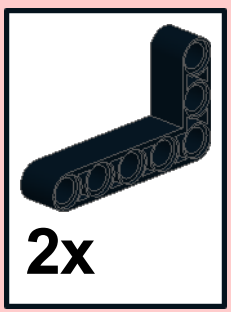


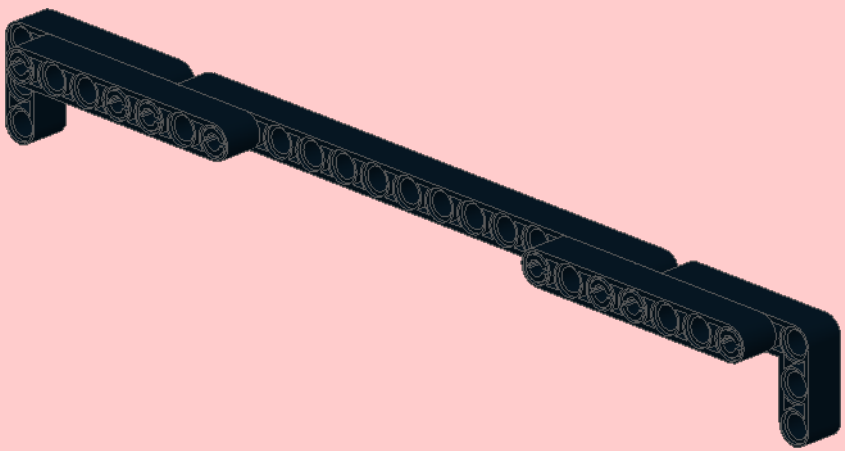

x4

5

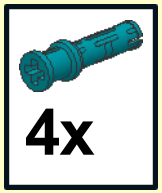


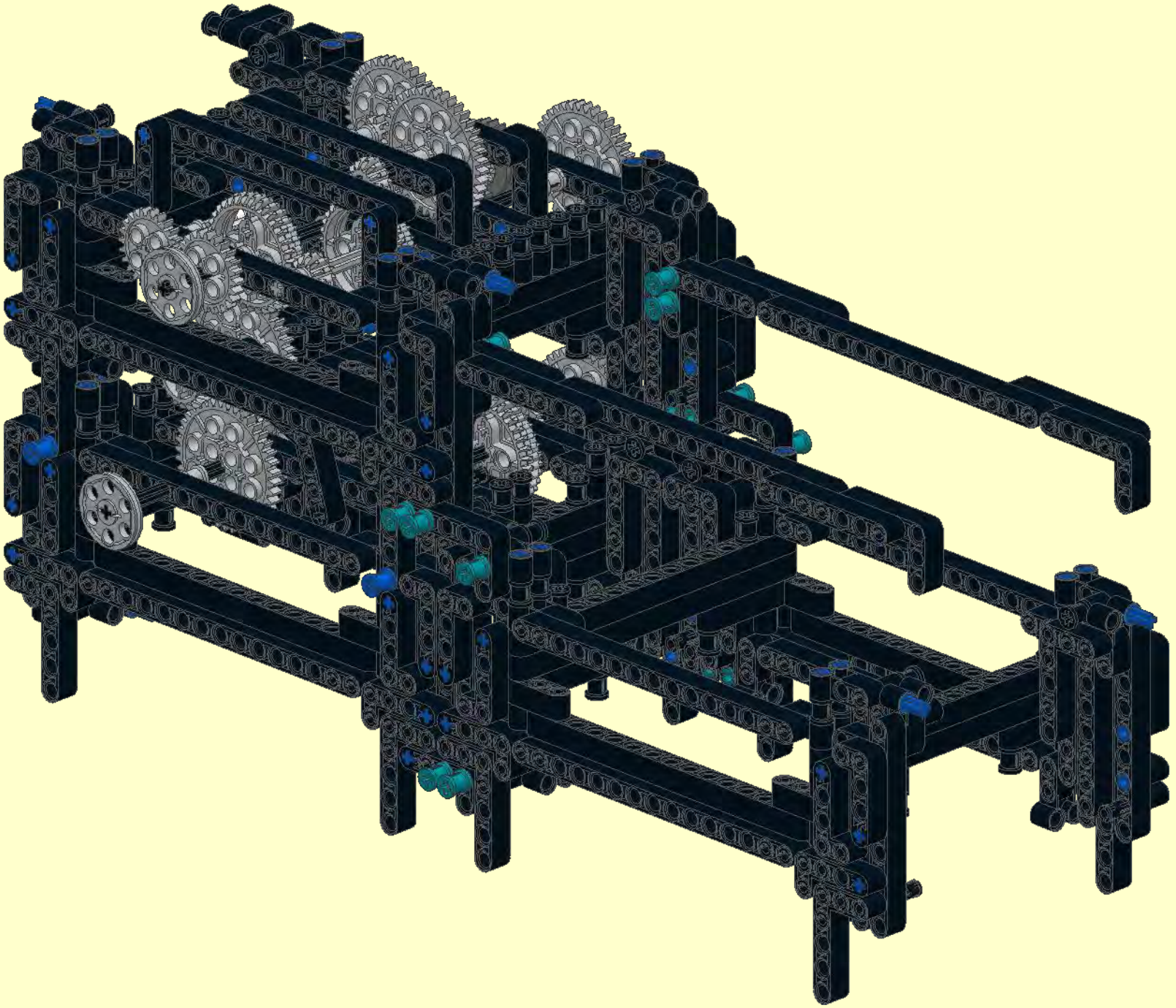

1

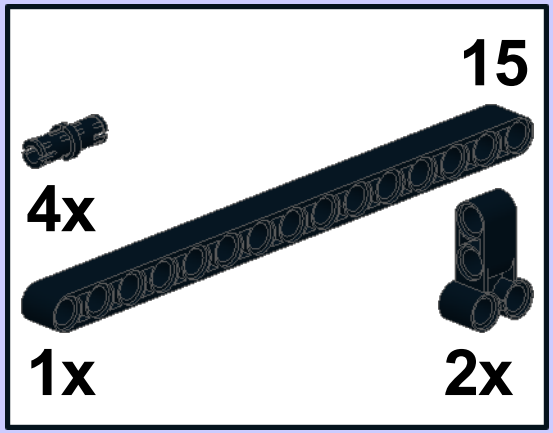


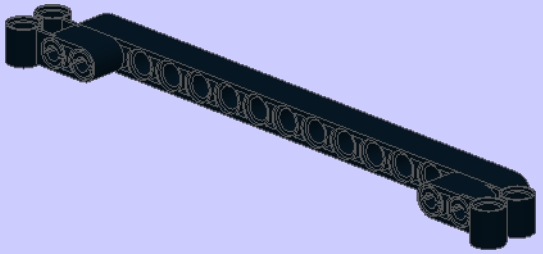

2

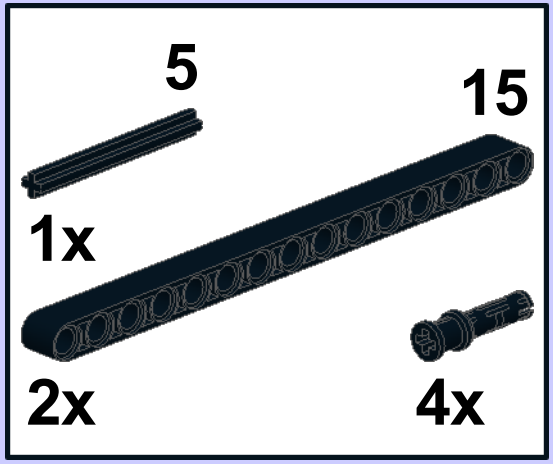


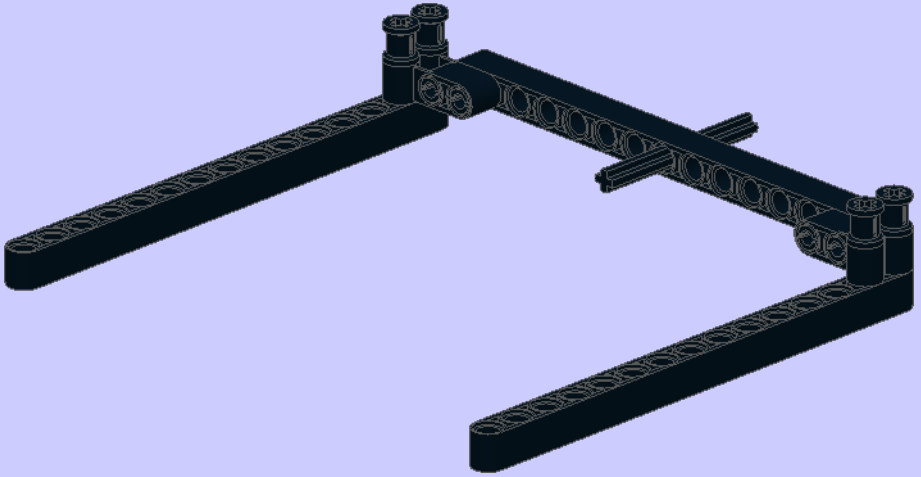

3

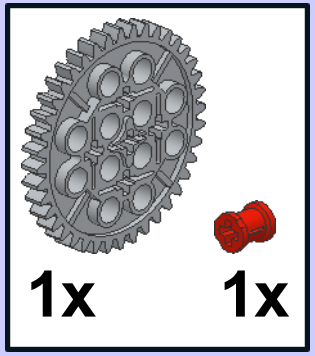


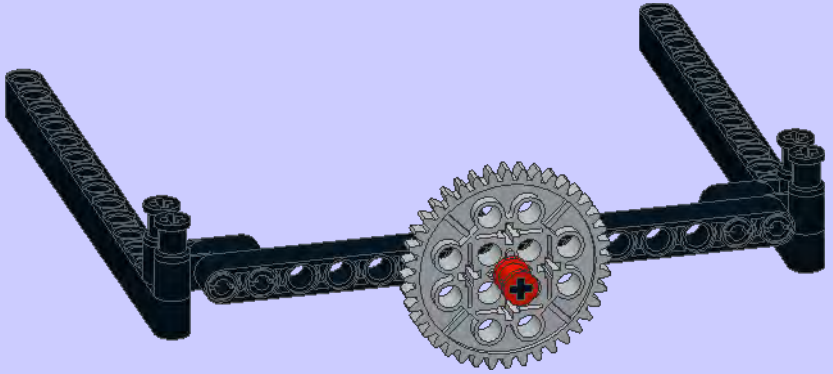

**4**

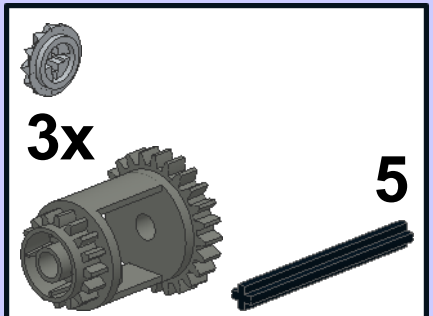


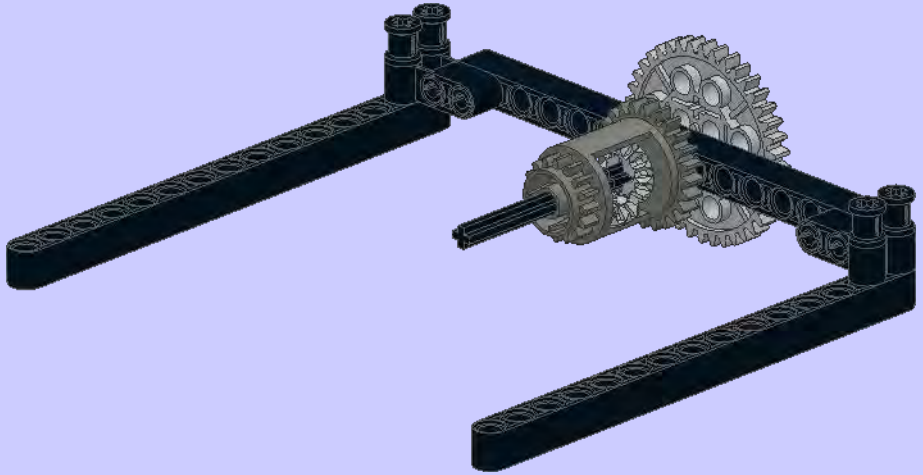

**5**

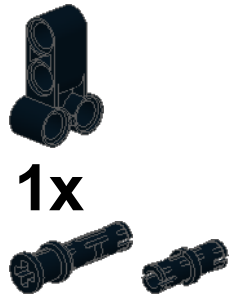


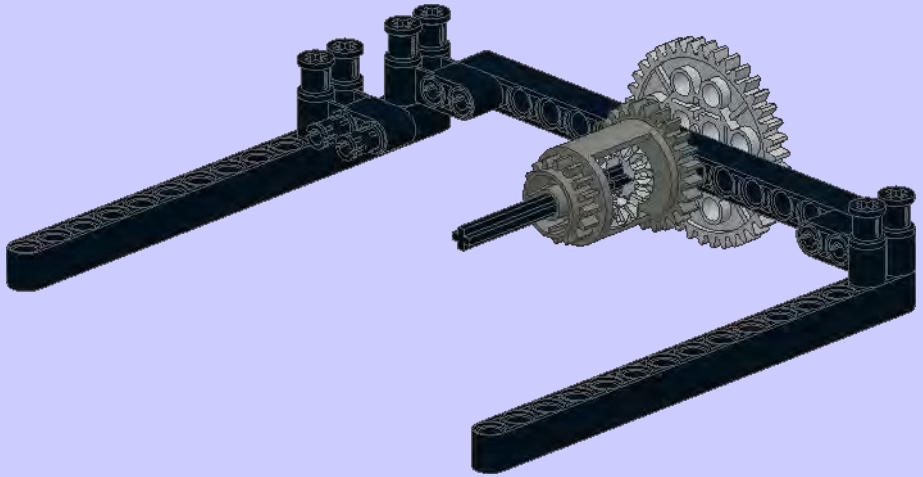

**6**

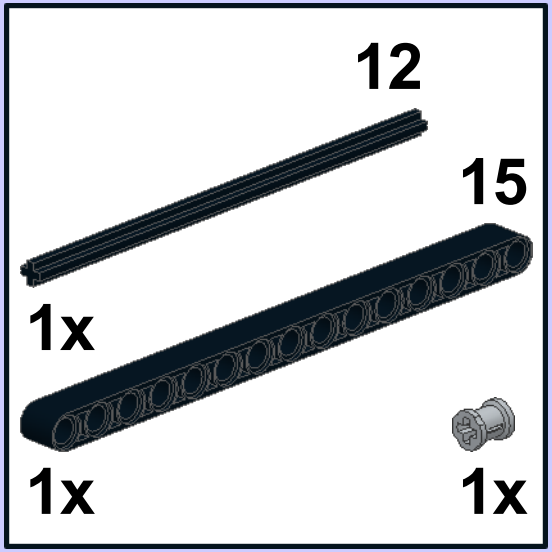


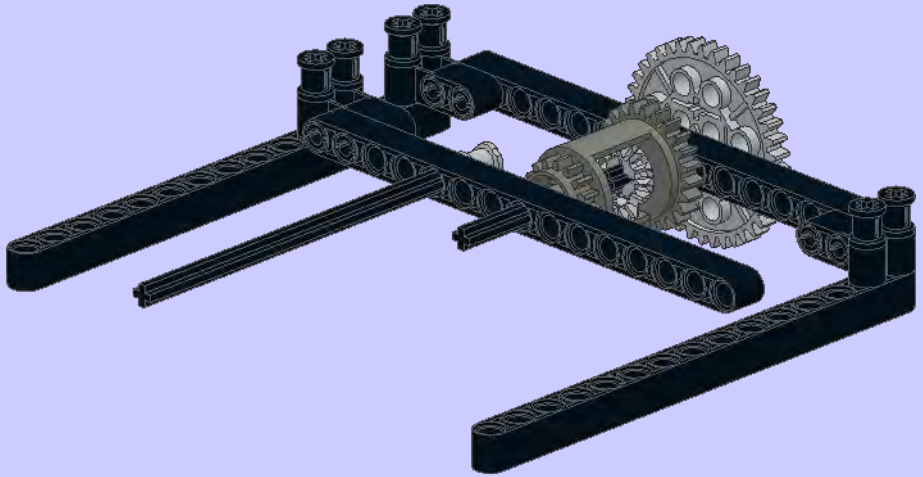

**7**

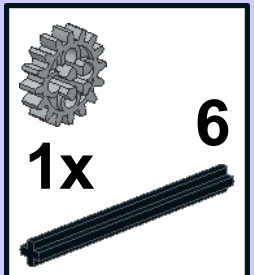


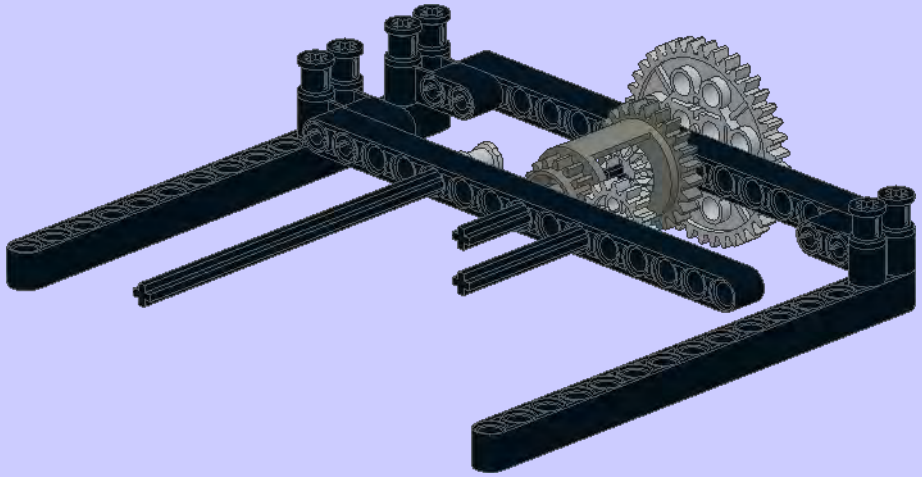

**8**

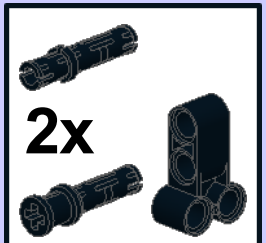


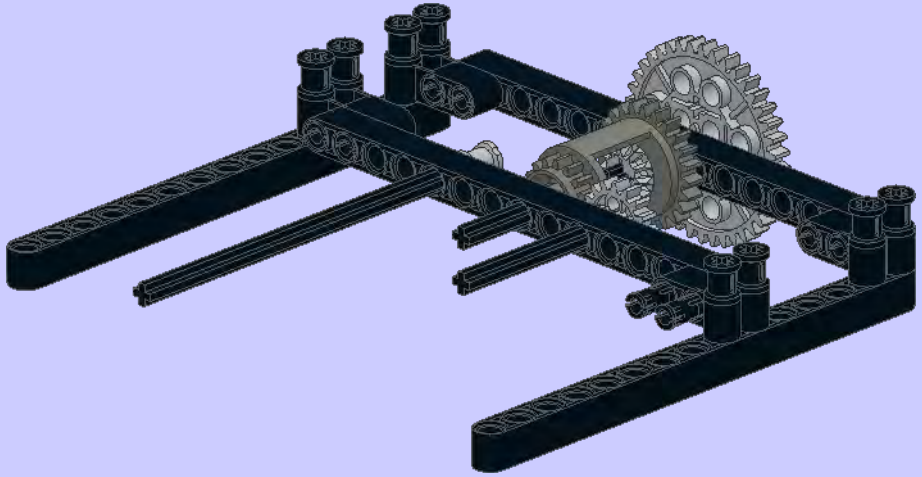

**9**

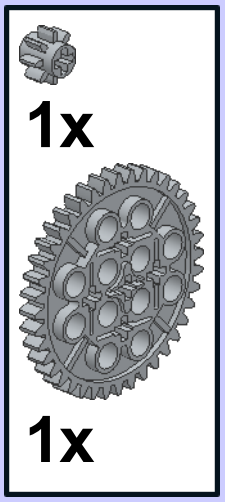


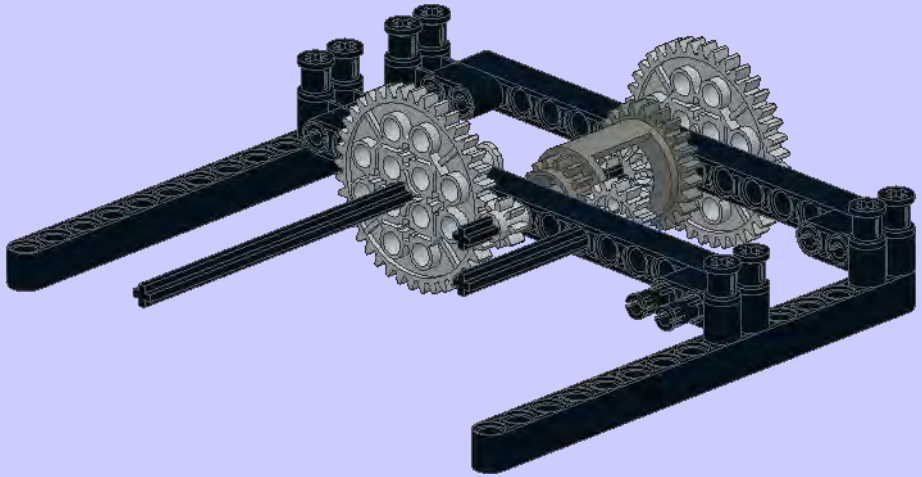

**10**

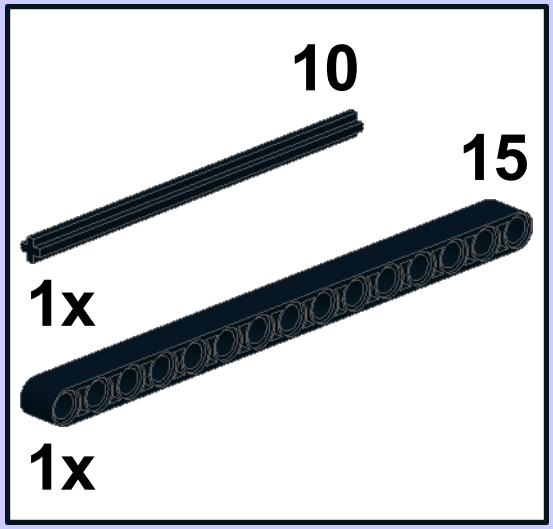


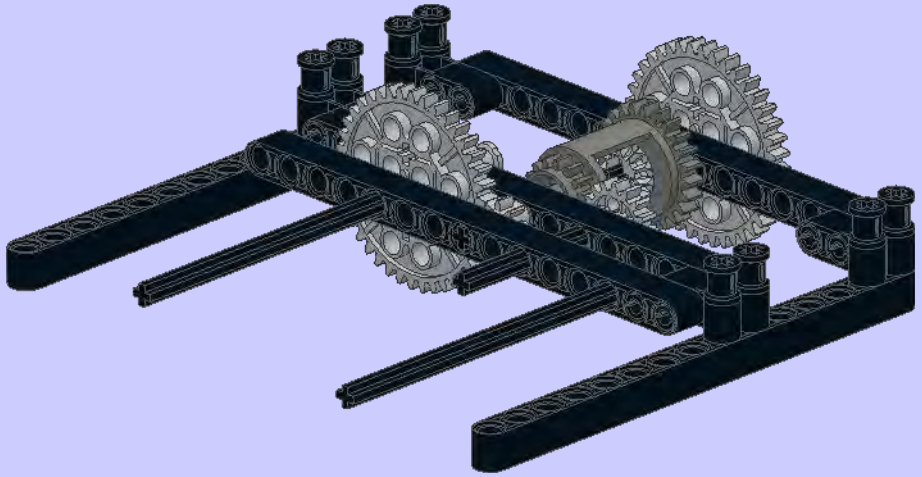

**11**

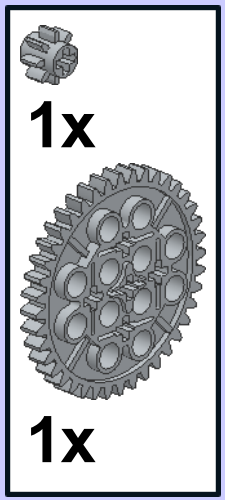


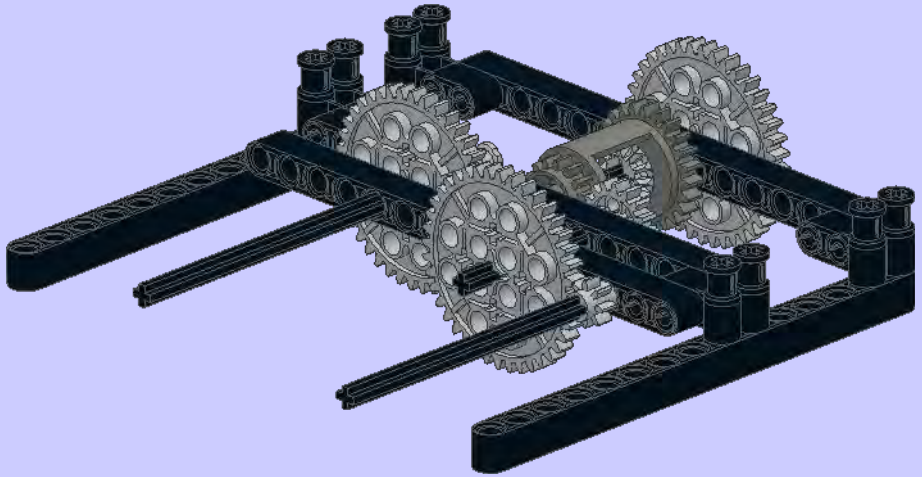

**12**

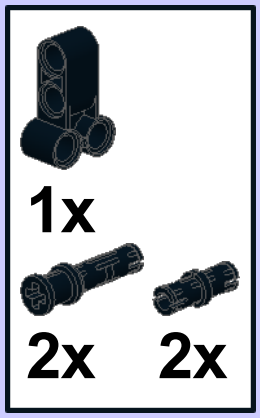


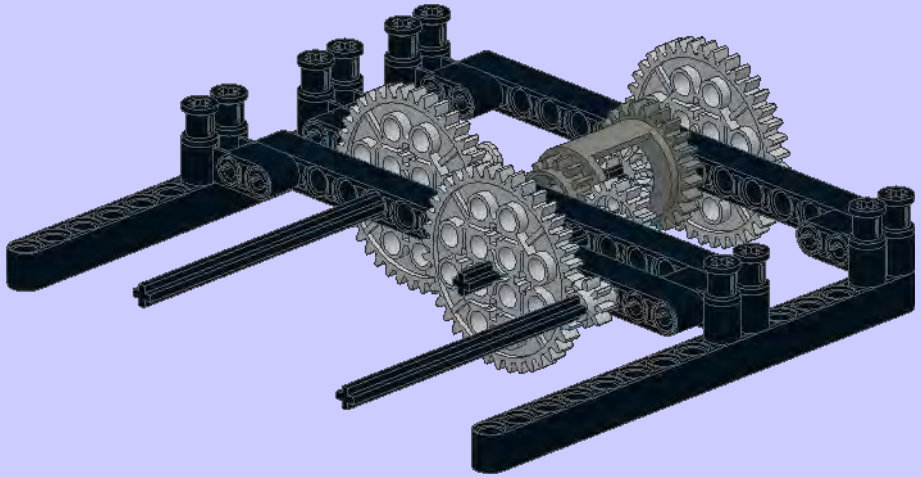

13

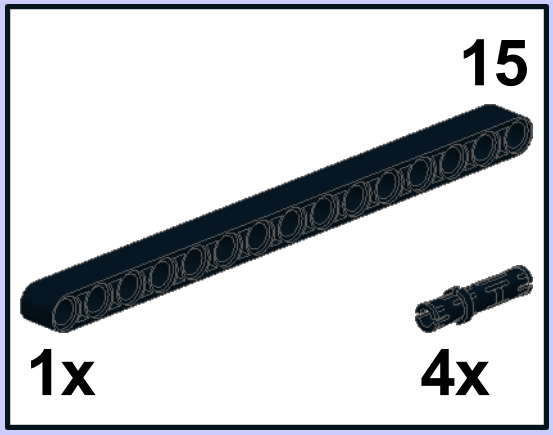


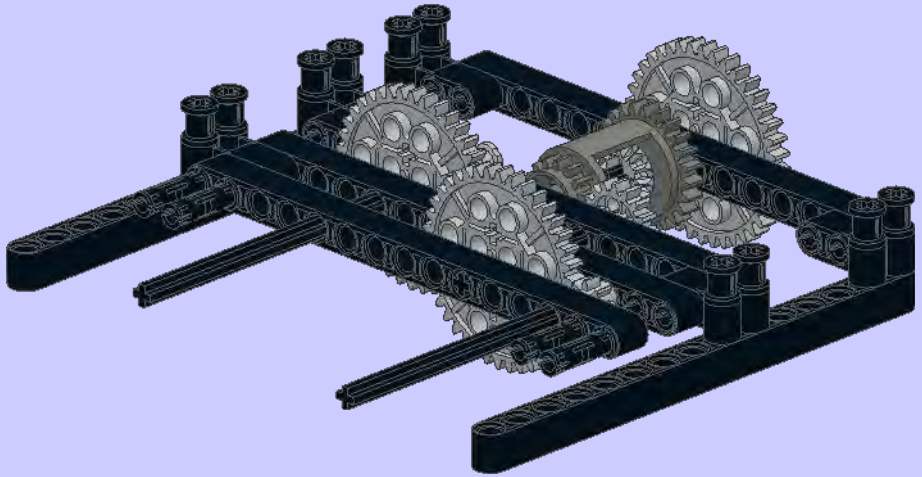

14

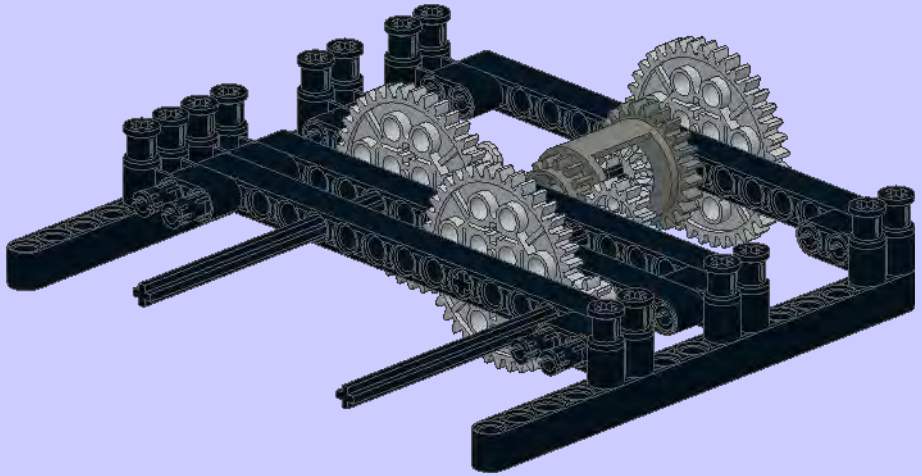

15

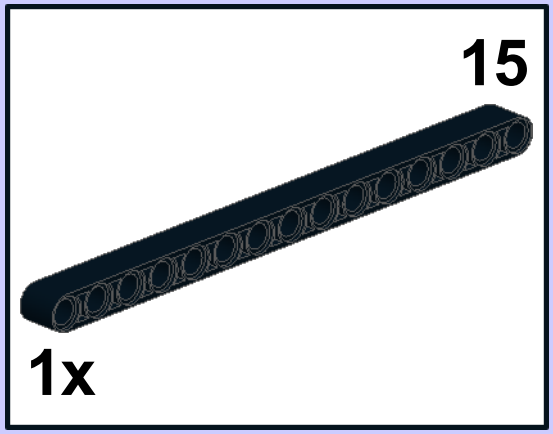


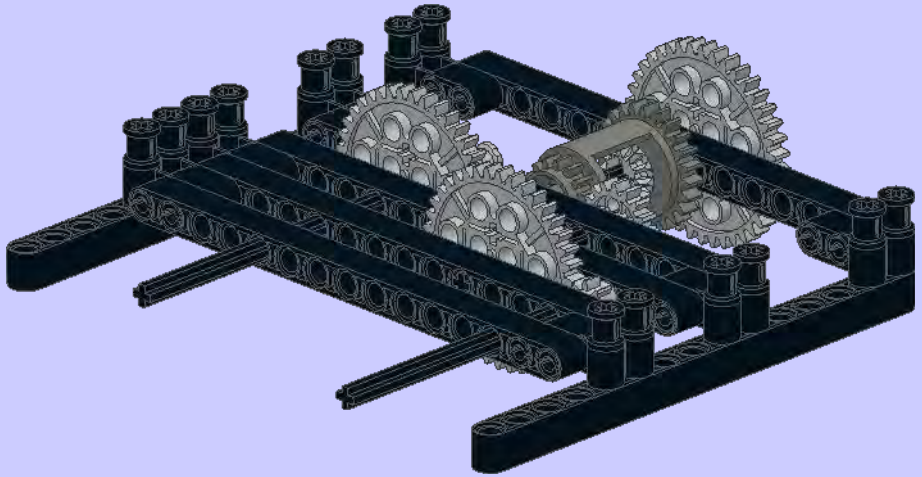

**16**

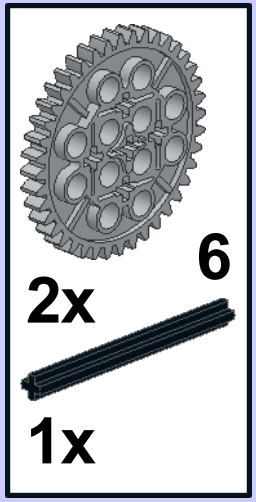


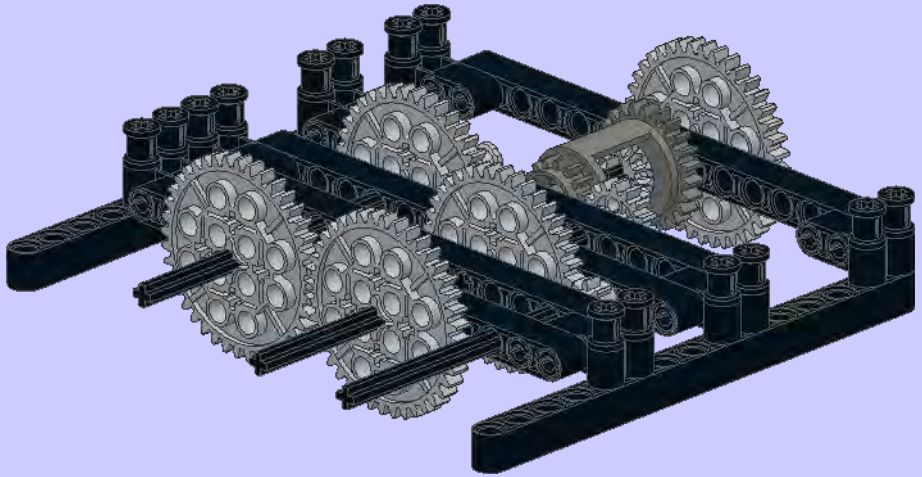

**17**

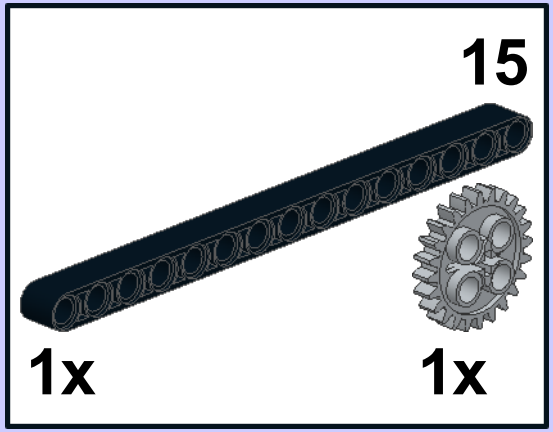


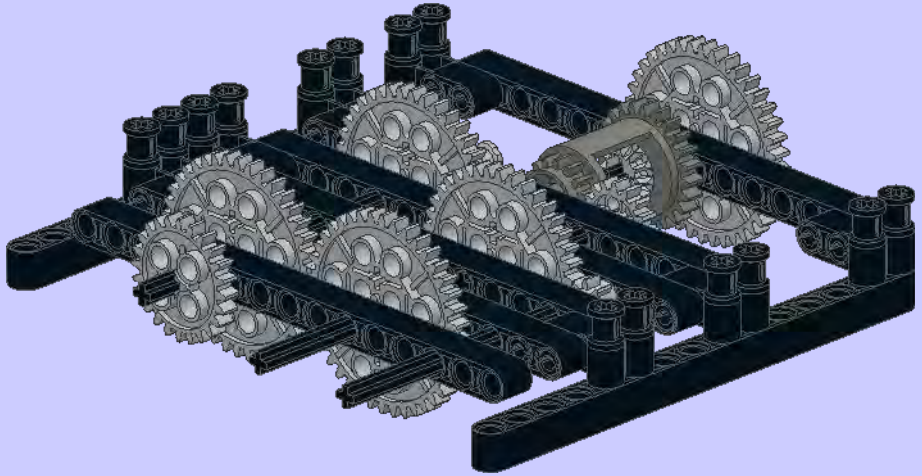

**18**

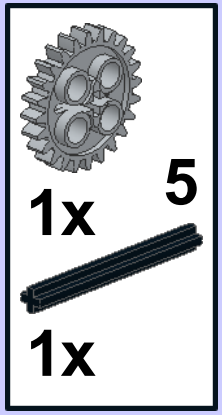


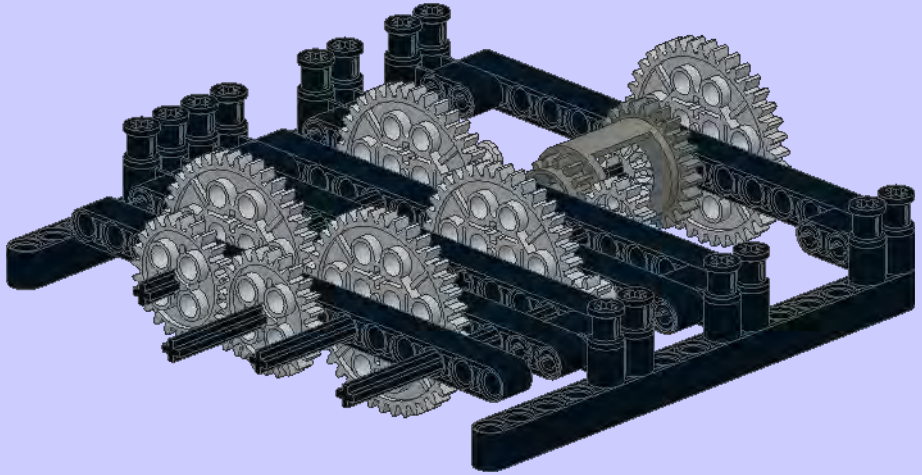

**19**

4x

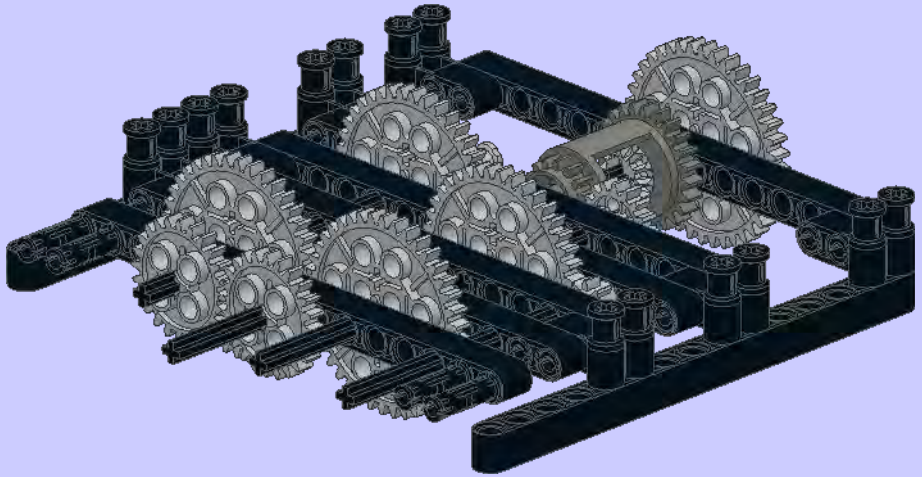

**20**

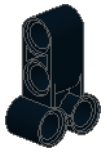

2x

4x

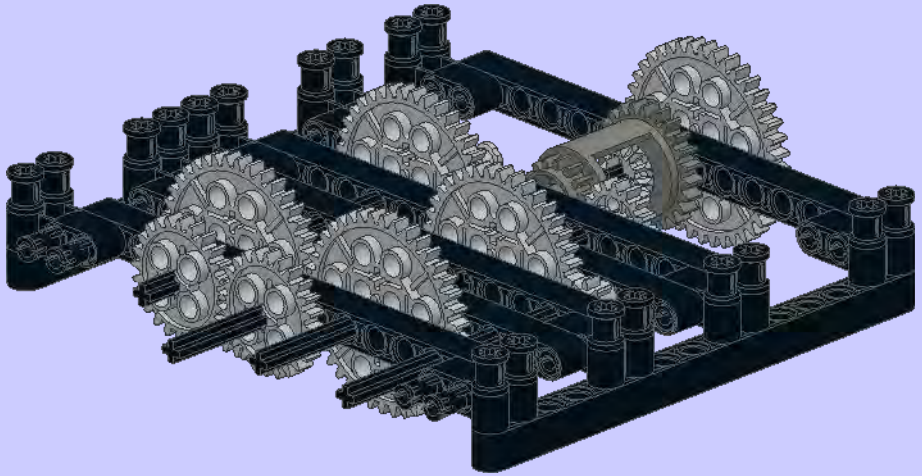

**21**

15

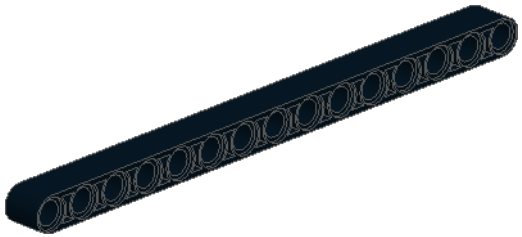

1x

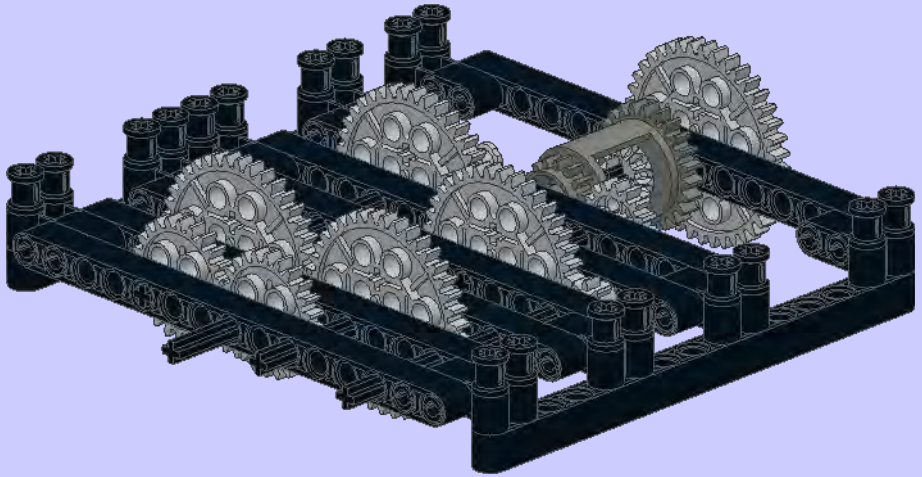

**22**

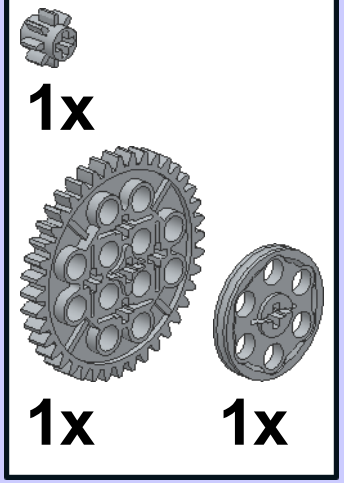


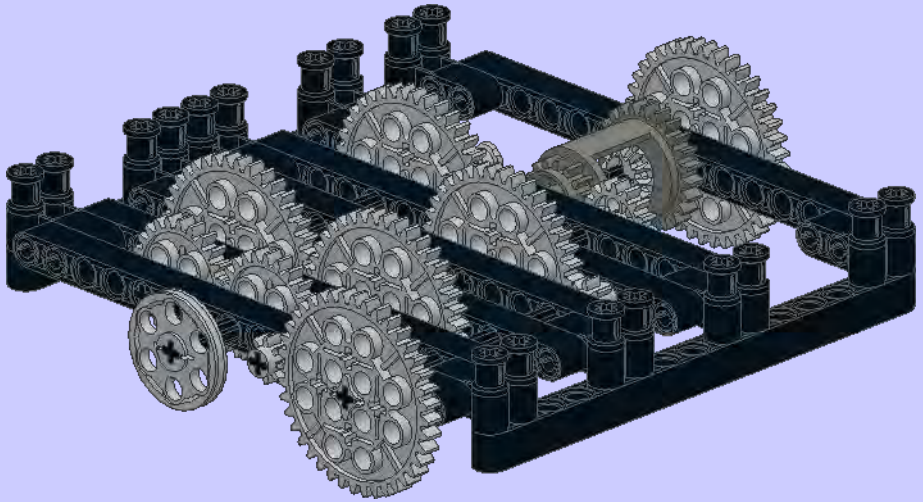

**23**

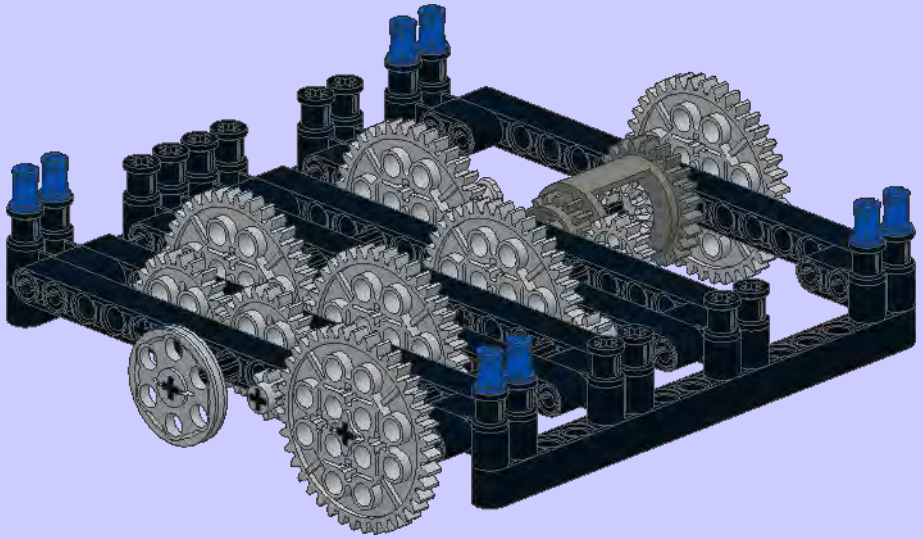

**24**

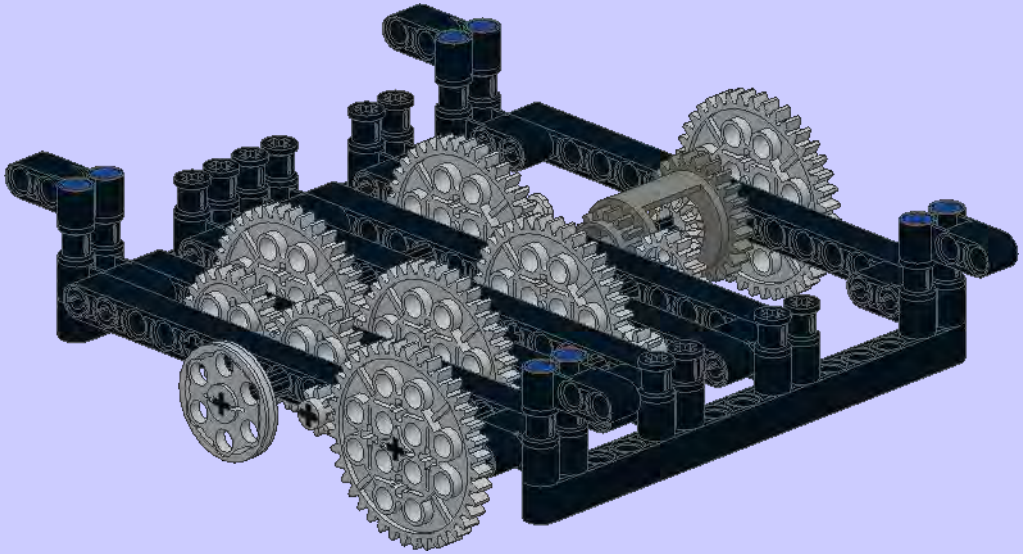

1

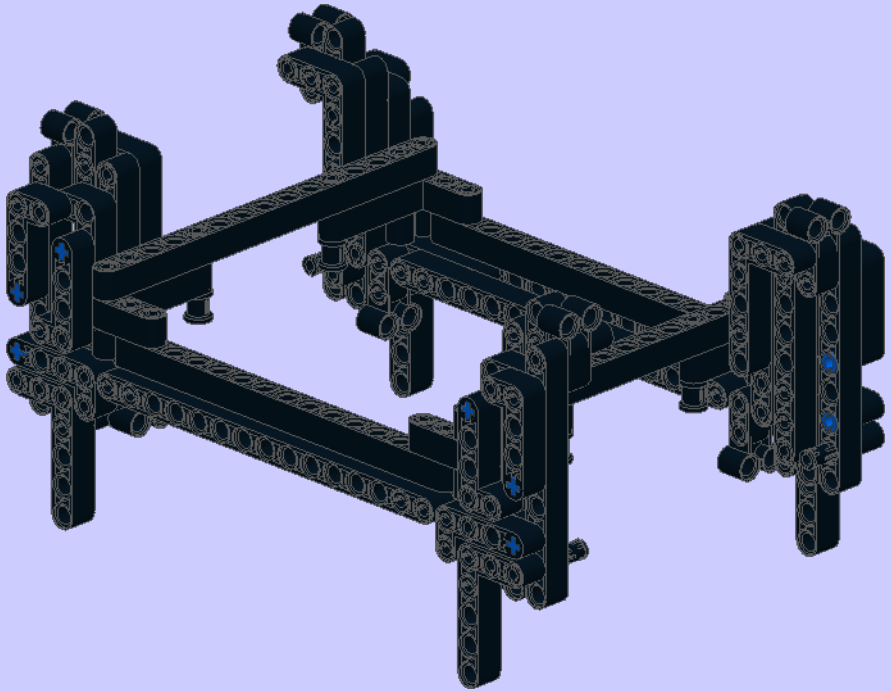

2

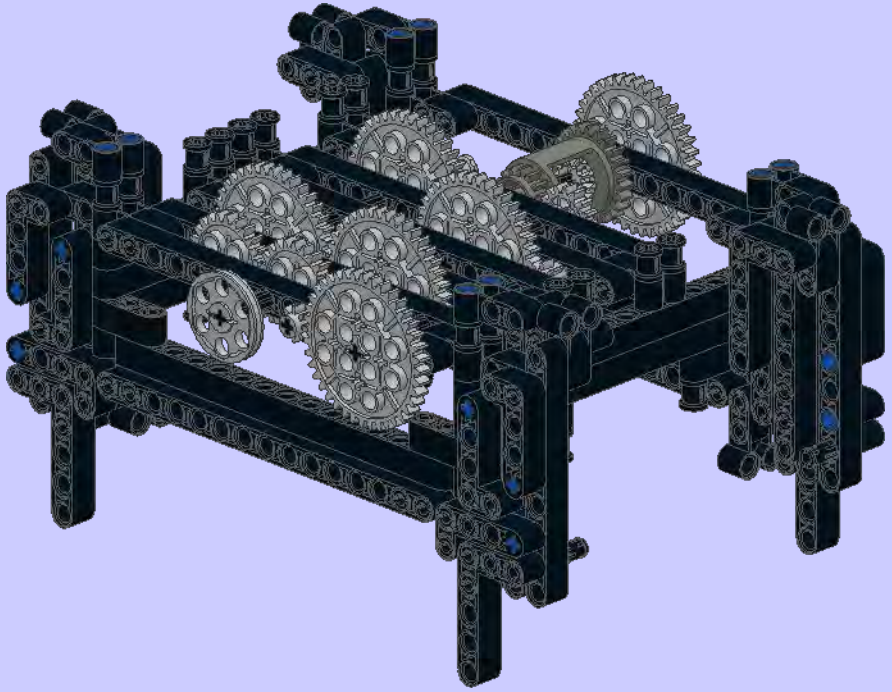

3

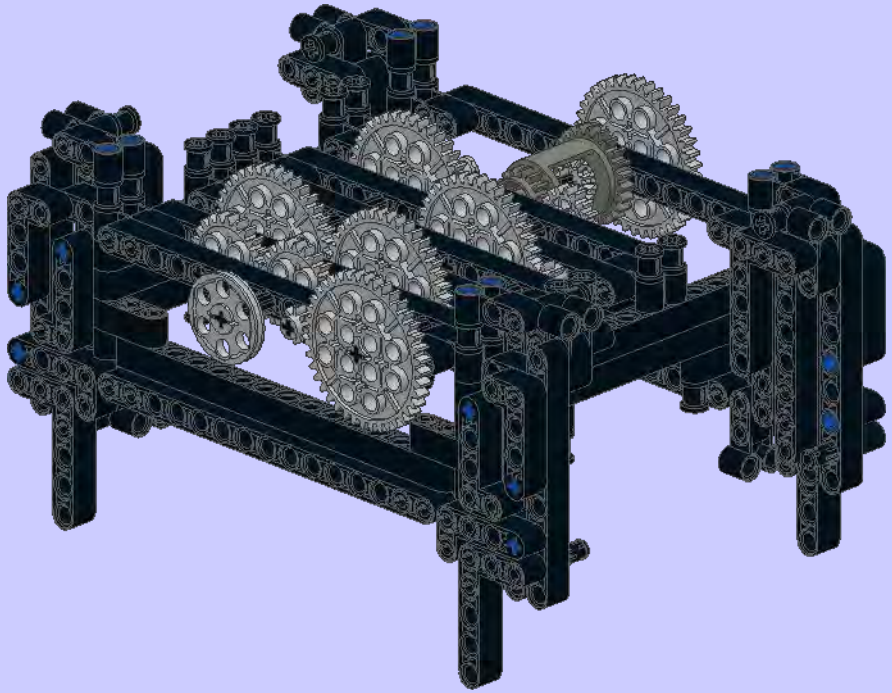

4

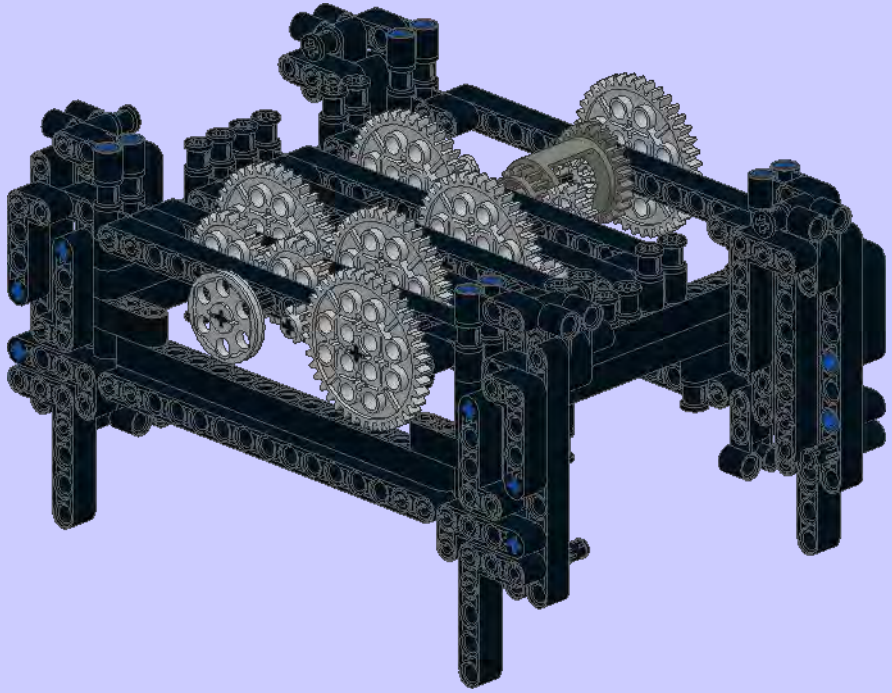

5

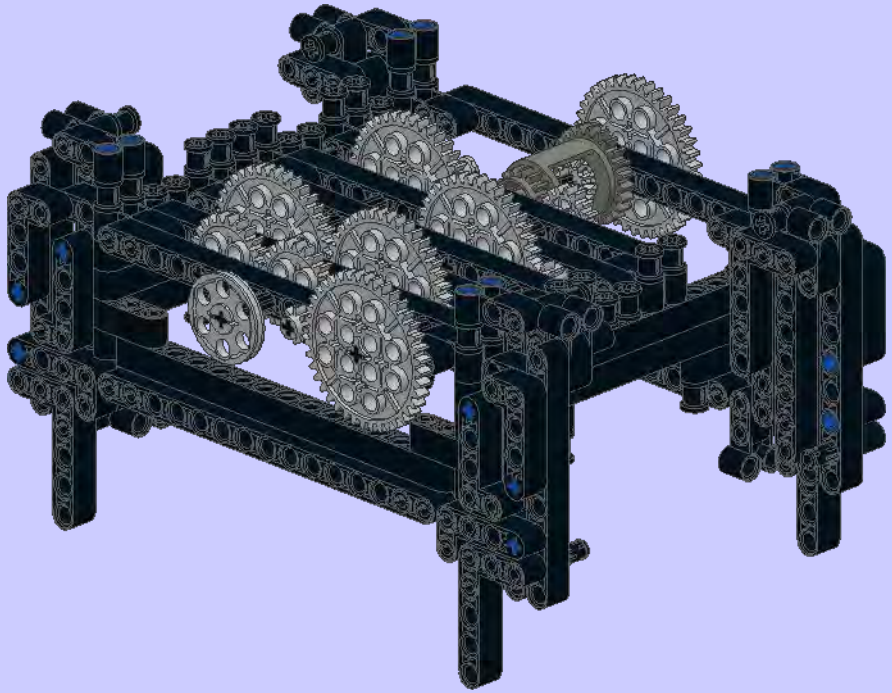

6

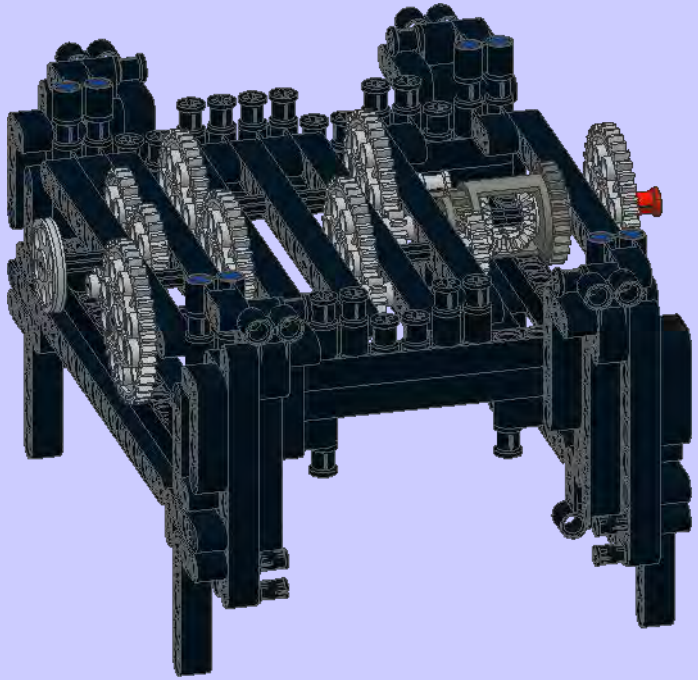

7

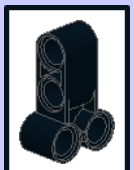

2x

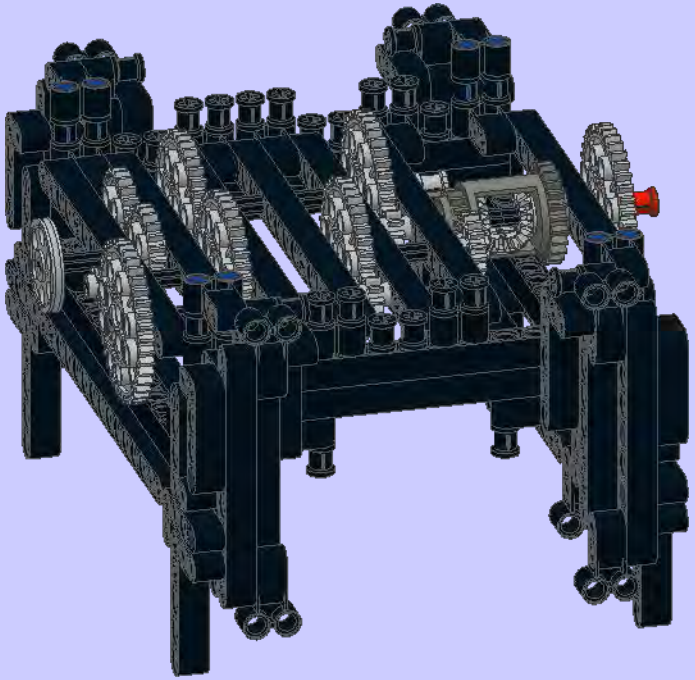

8

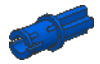

2x

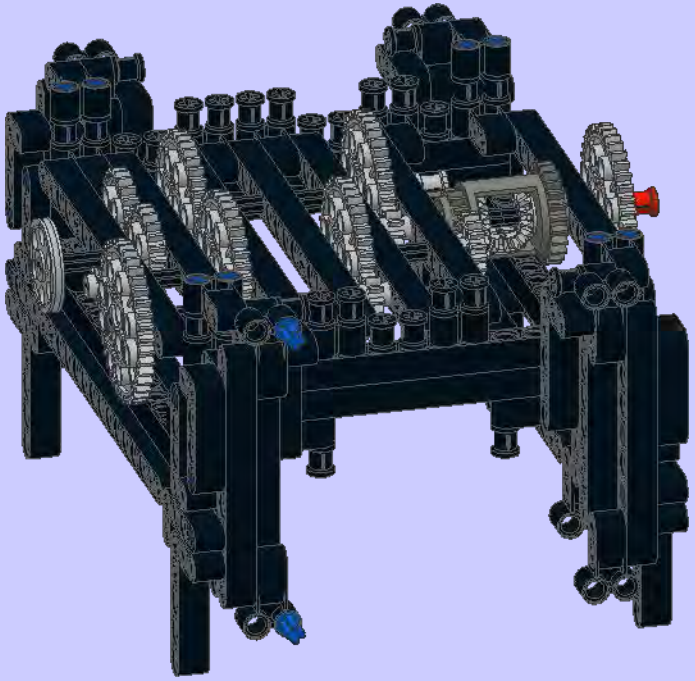

**9**

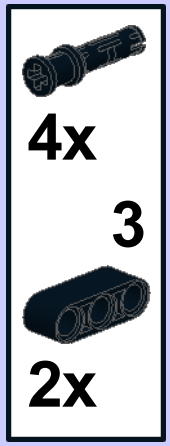


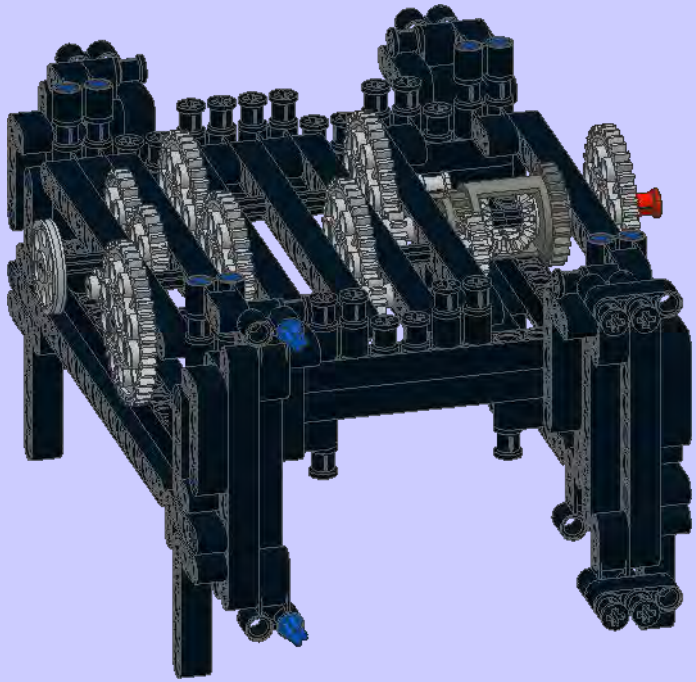

**10**

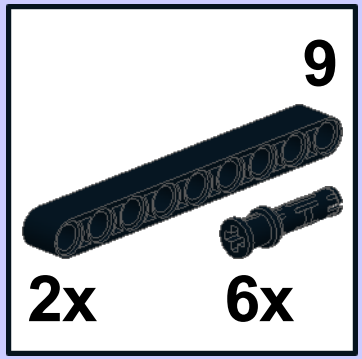


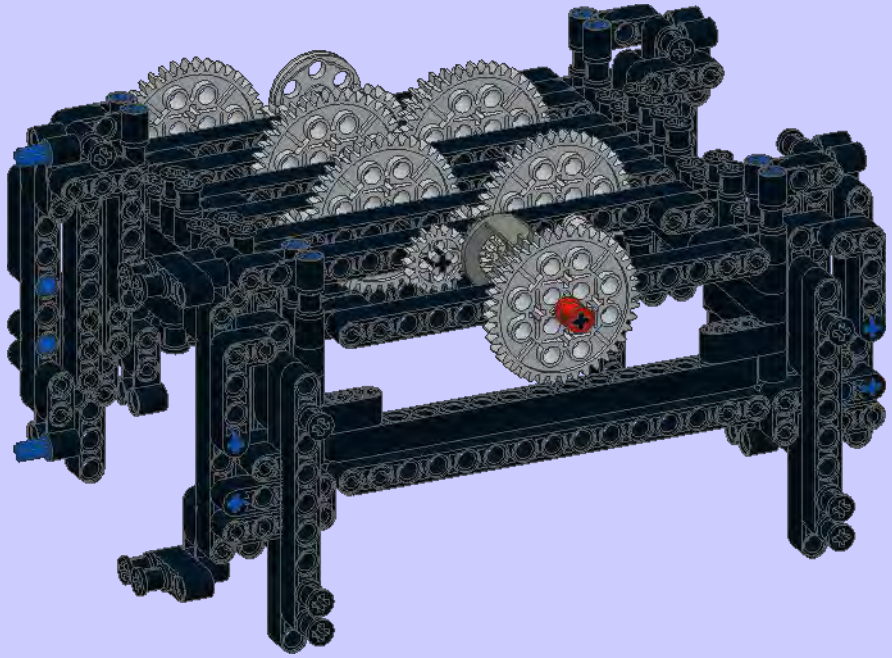

11

4x

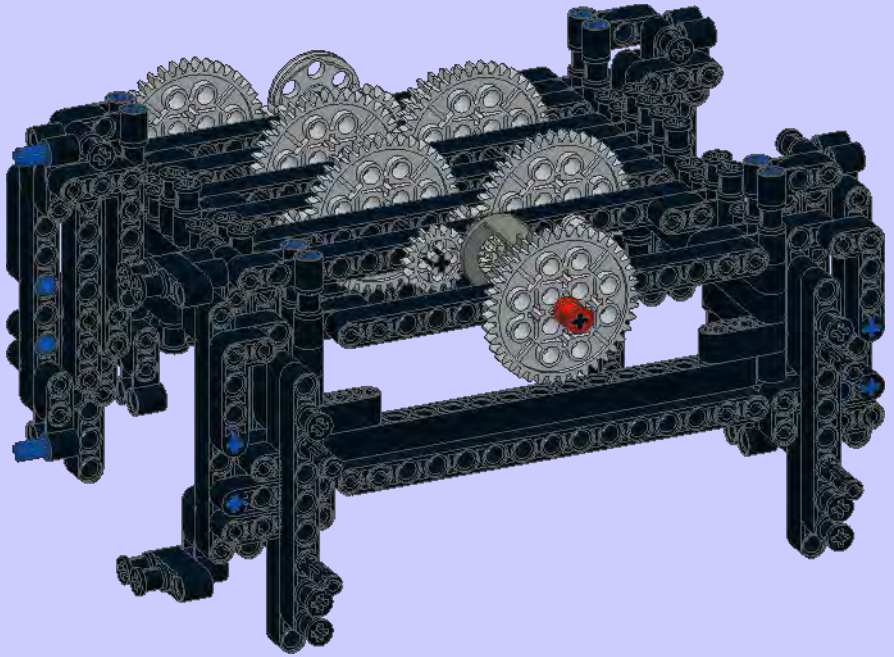

12

5

4x

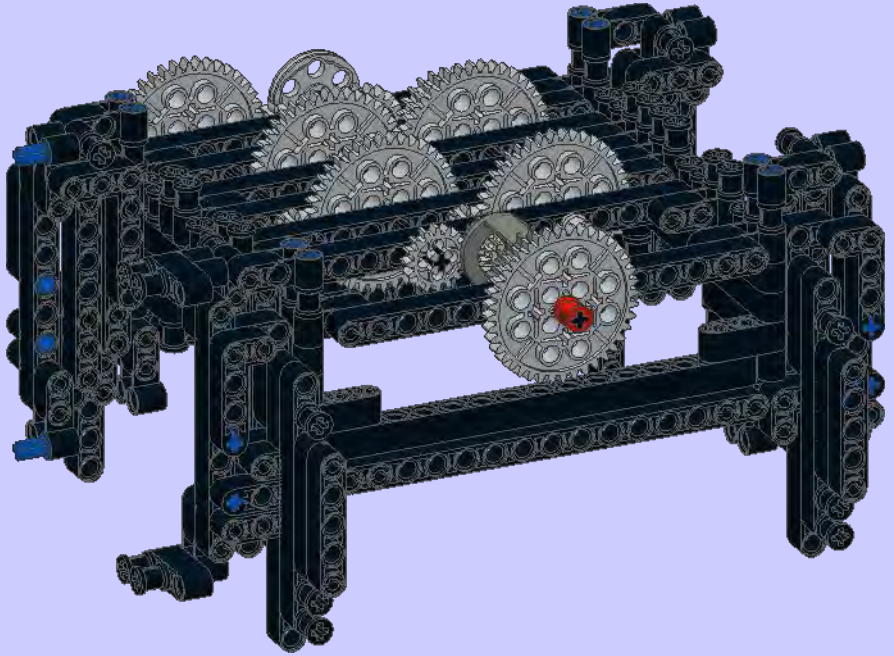

13

1x

1x

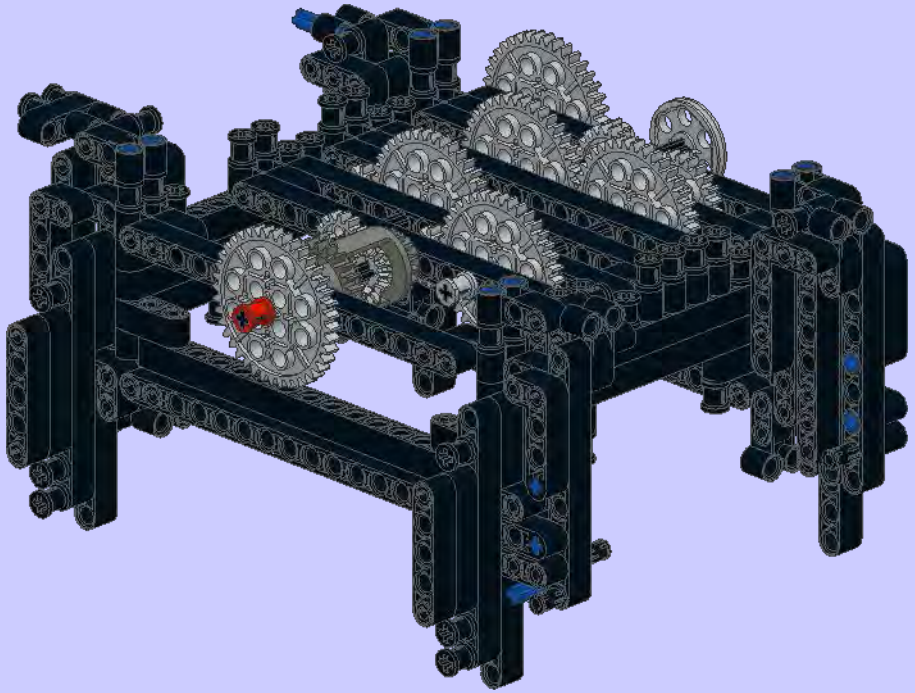

14

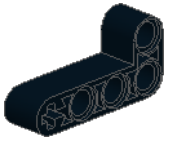

1x

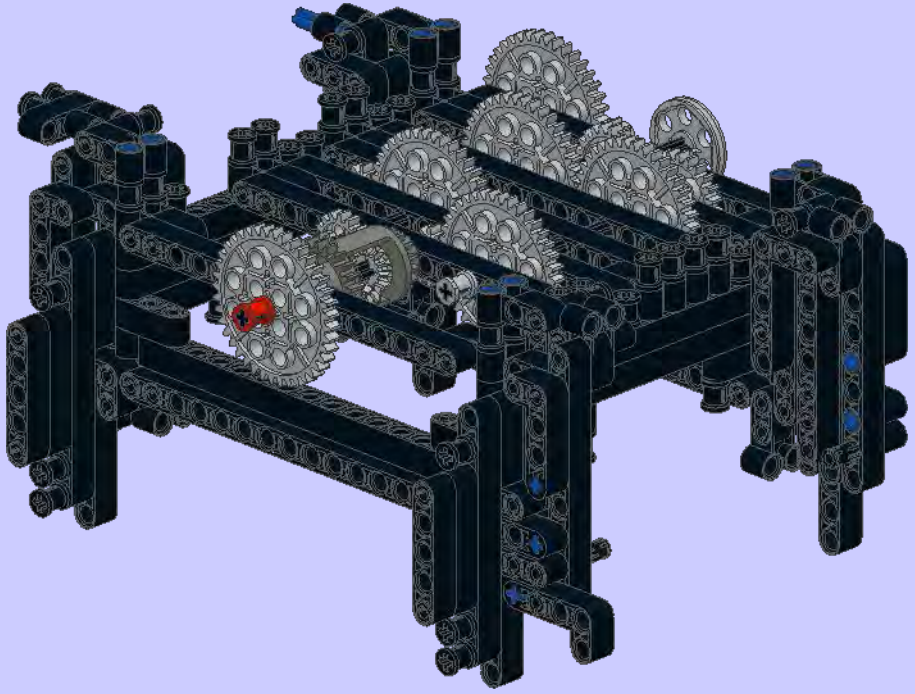

15

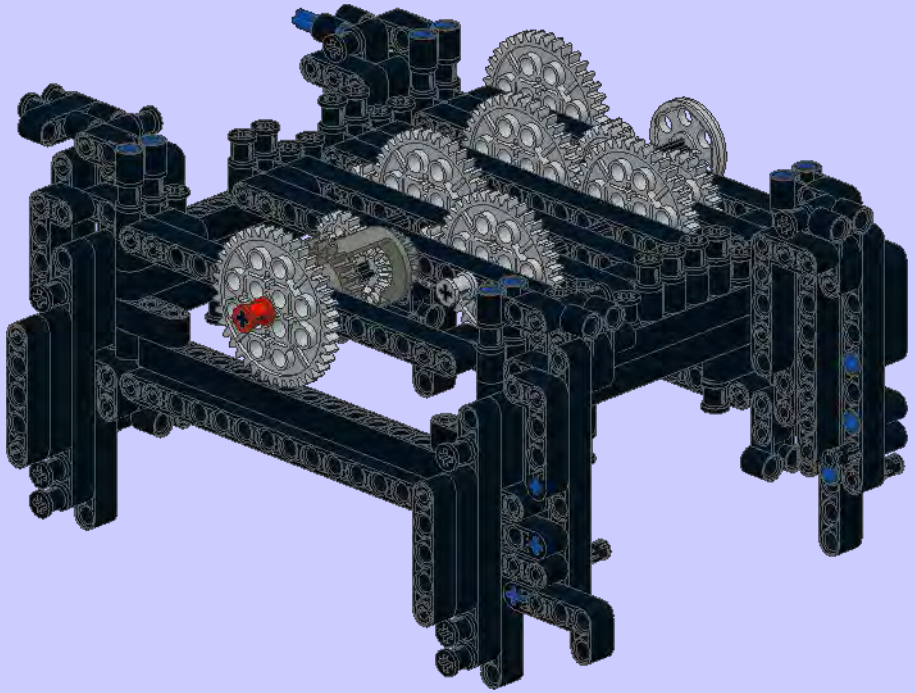

16

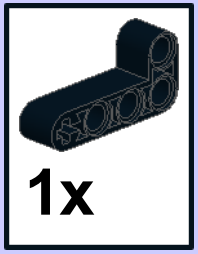


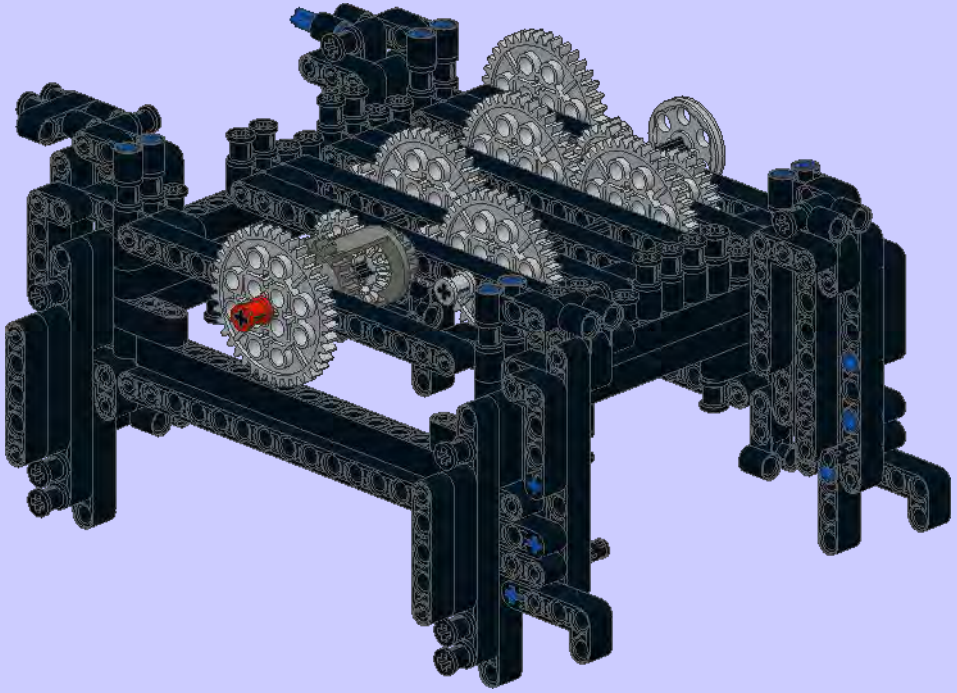

17

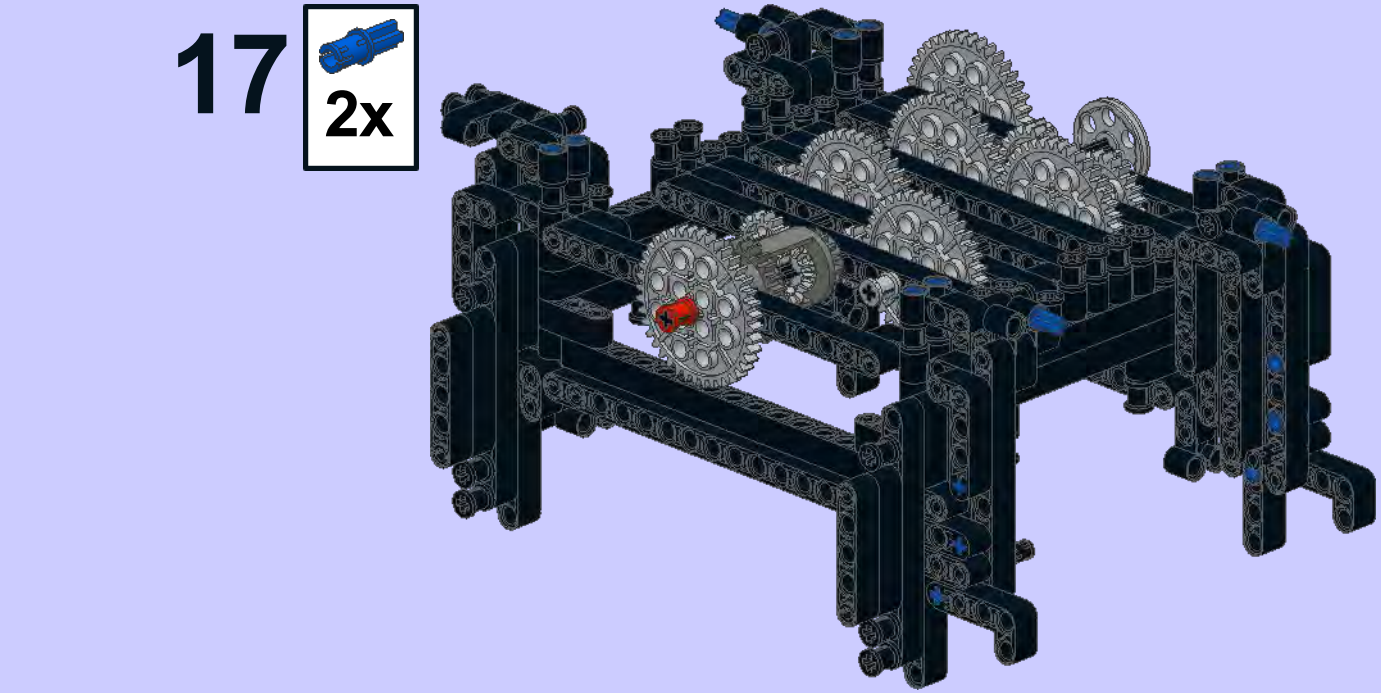


18

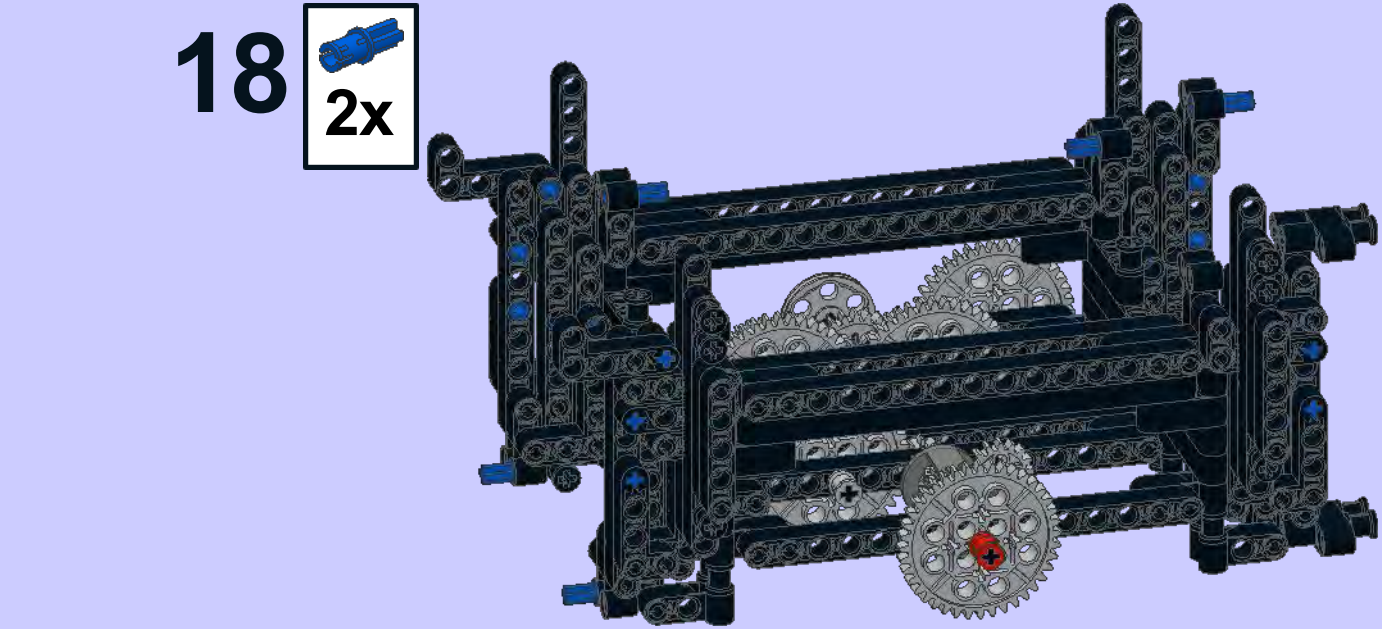

1

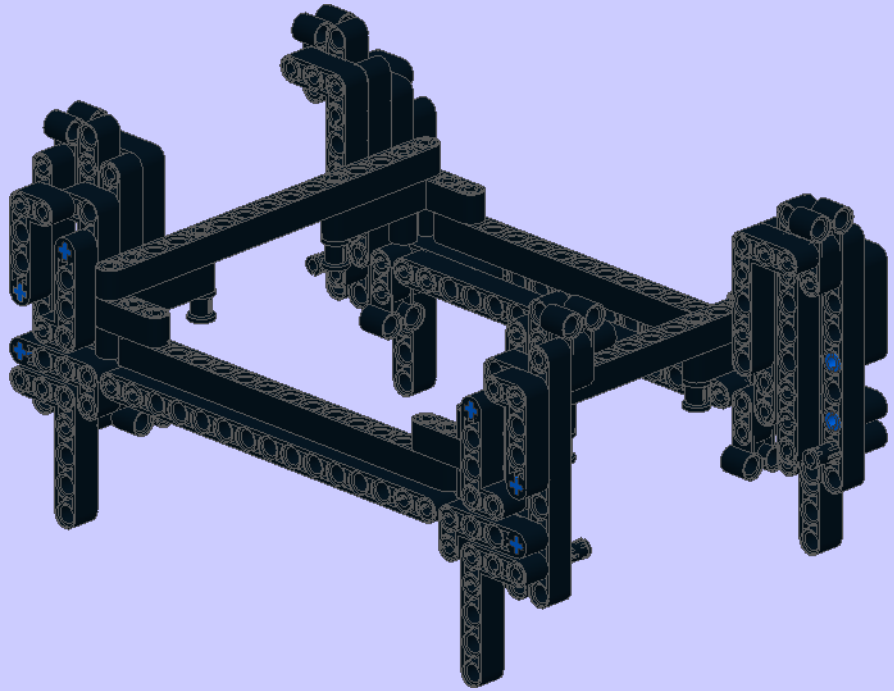

2

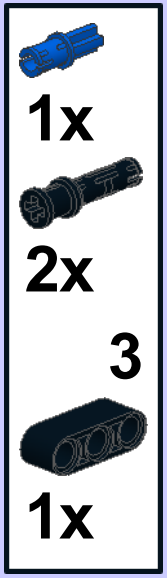


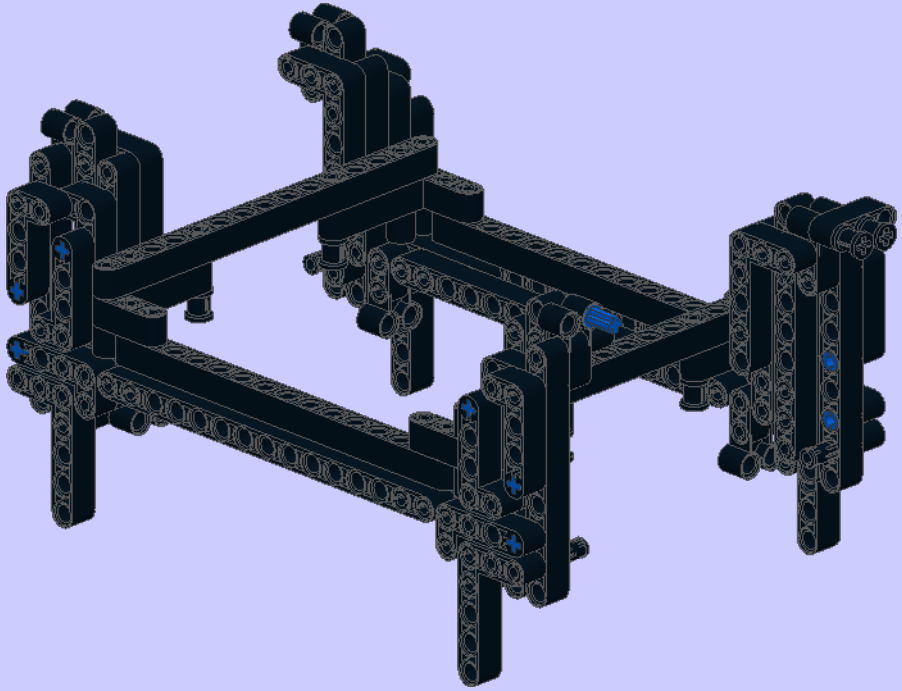

3

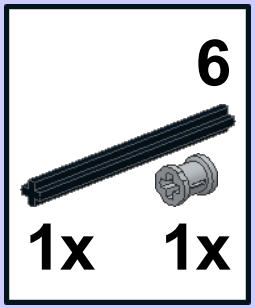


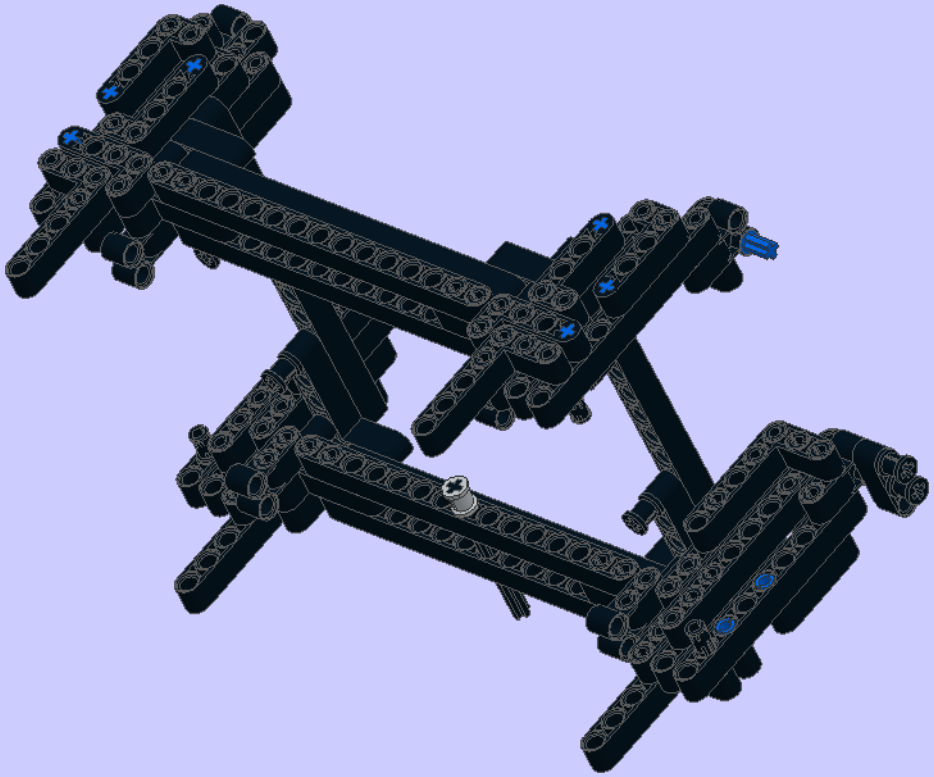

4

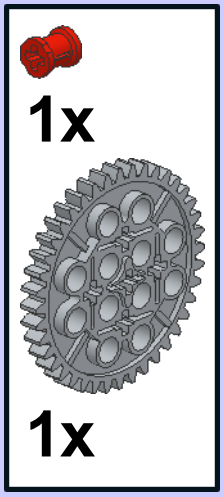


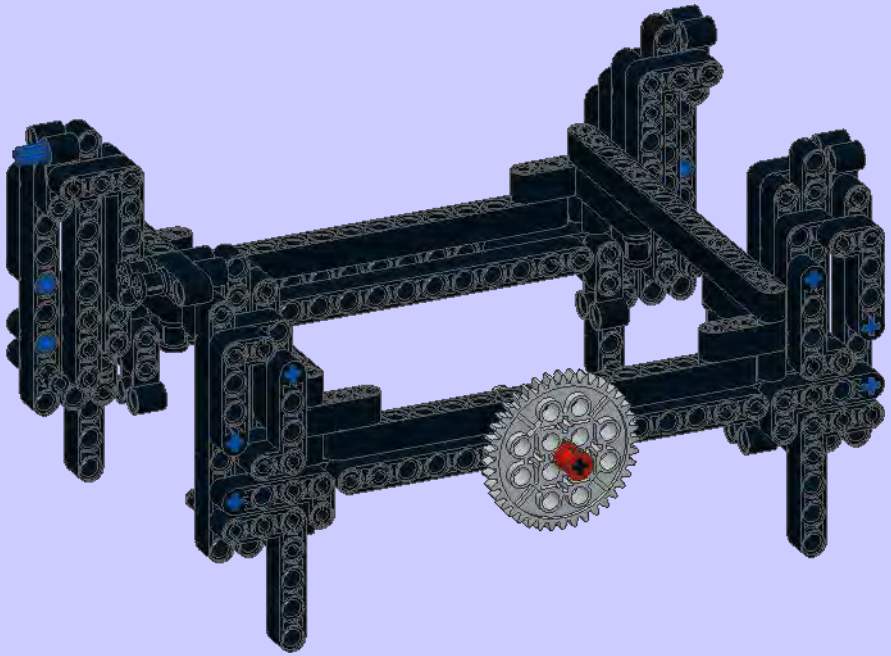

5

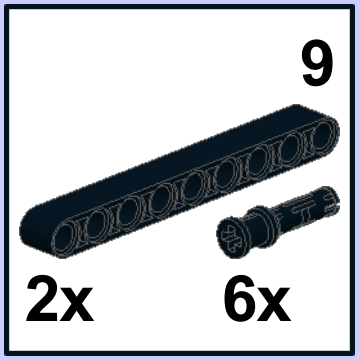


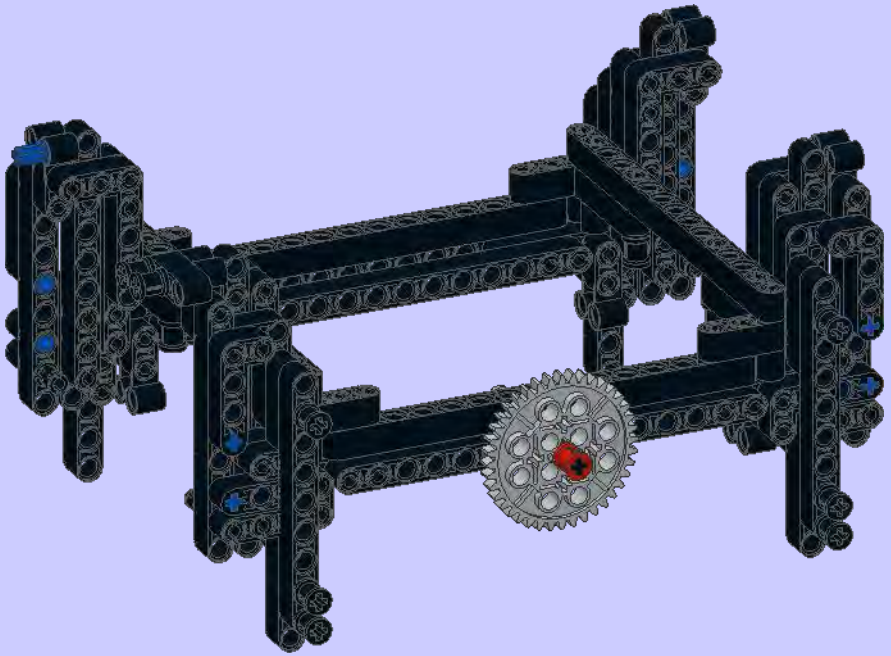

6

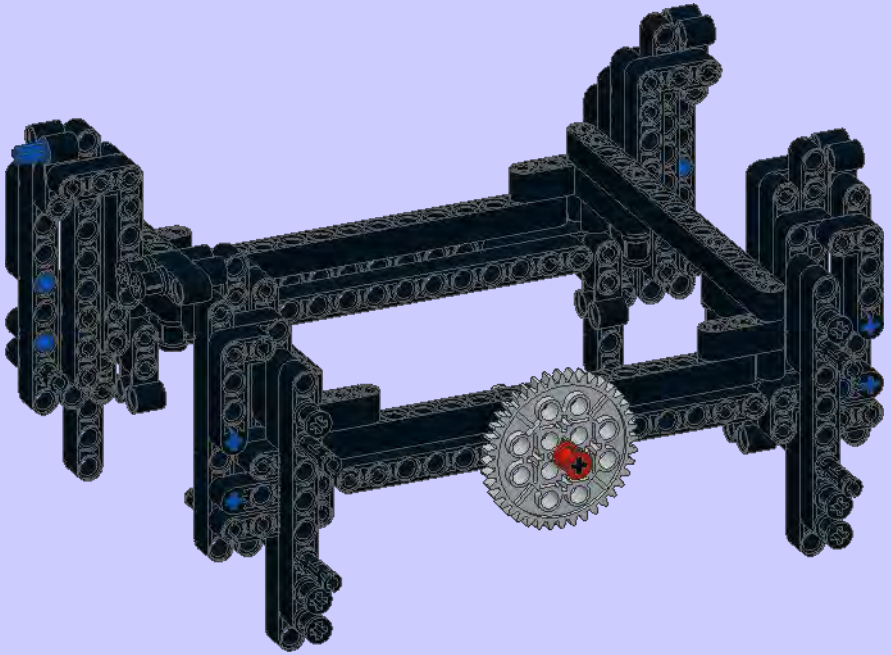

7

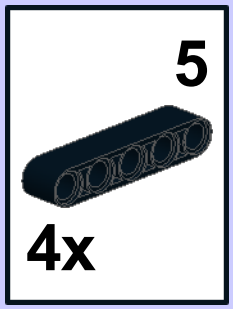


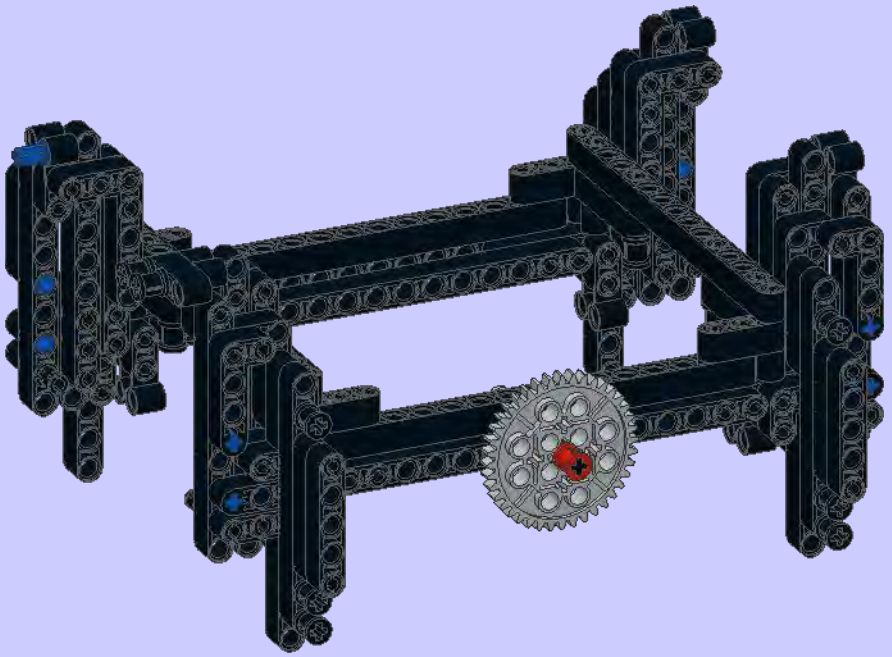

8

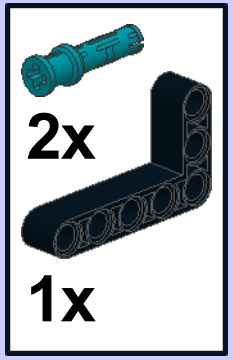


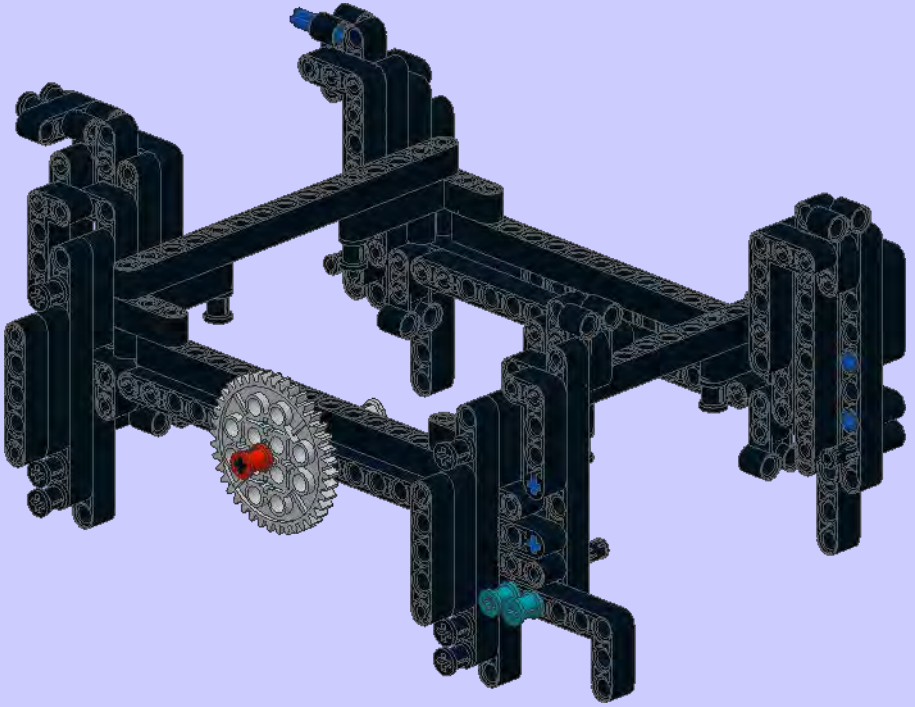

9

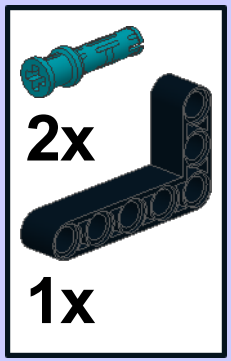


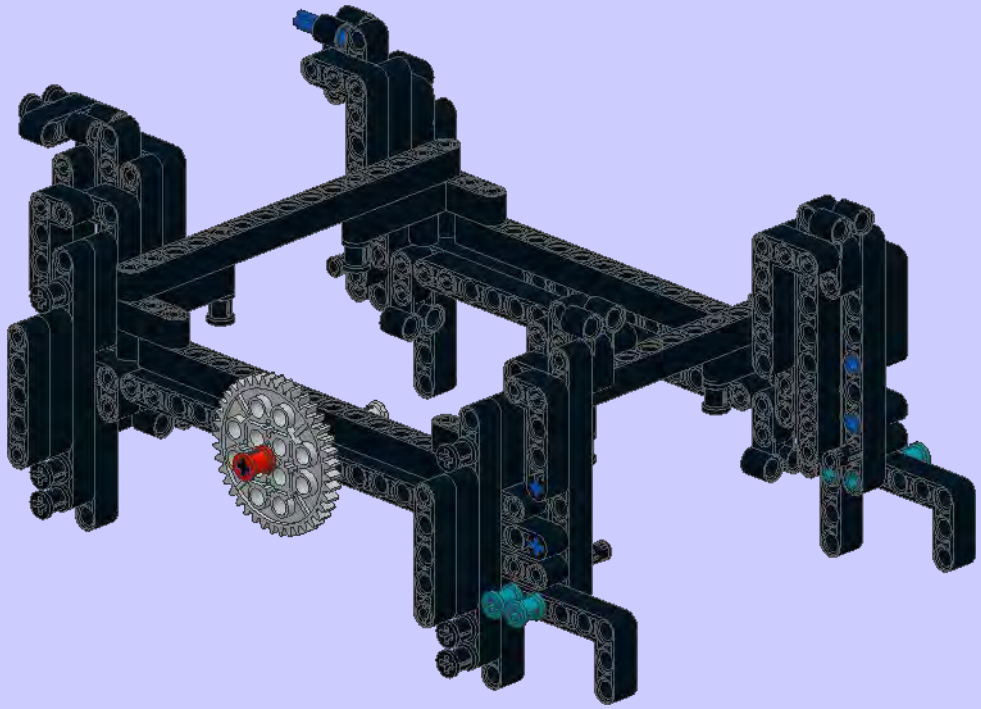

10

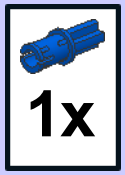


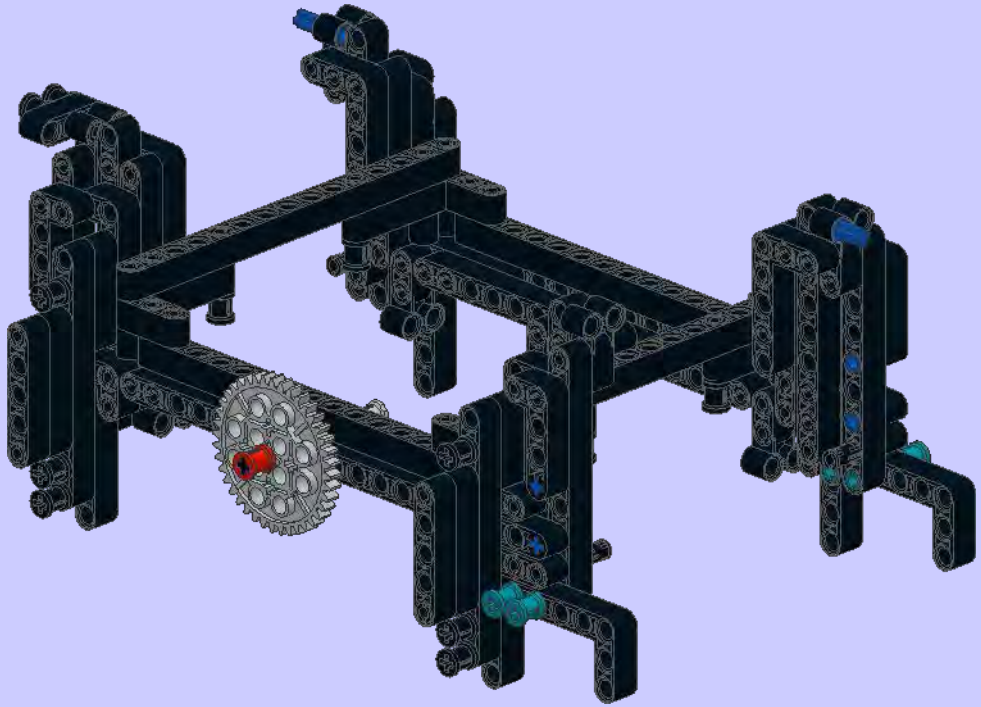

1

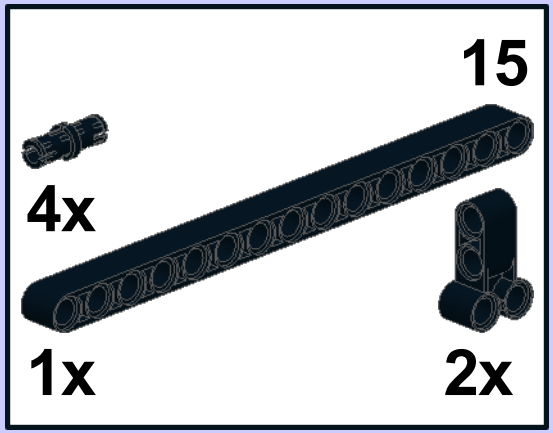


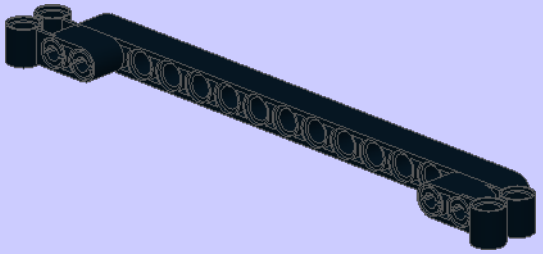

2

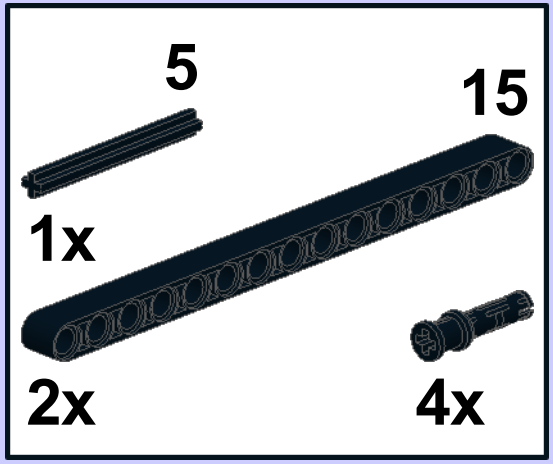


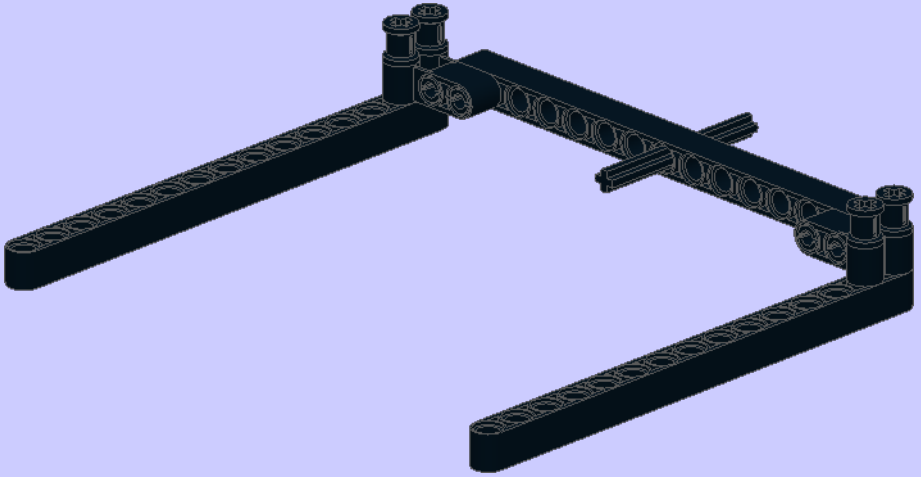

3

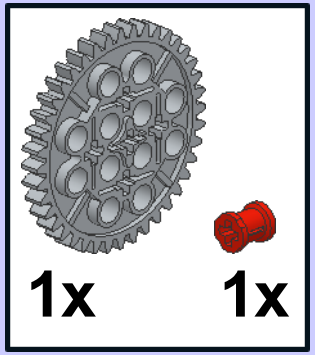


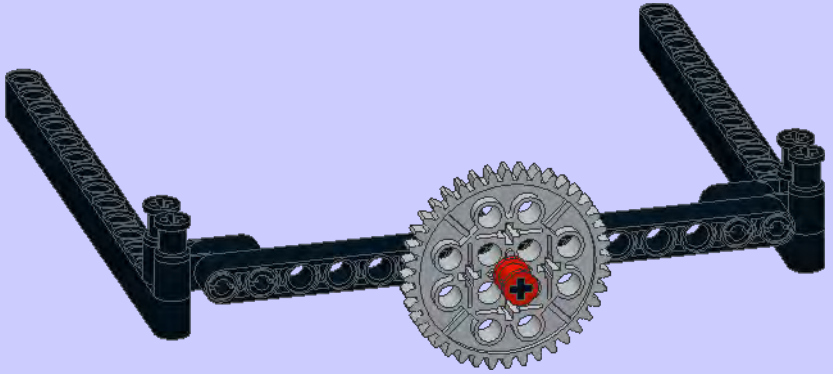

**4**

2x

5

1x

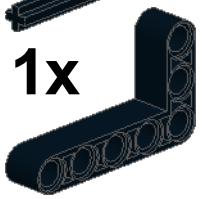

1x

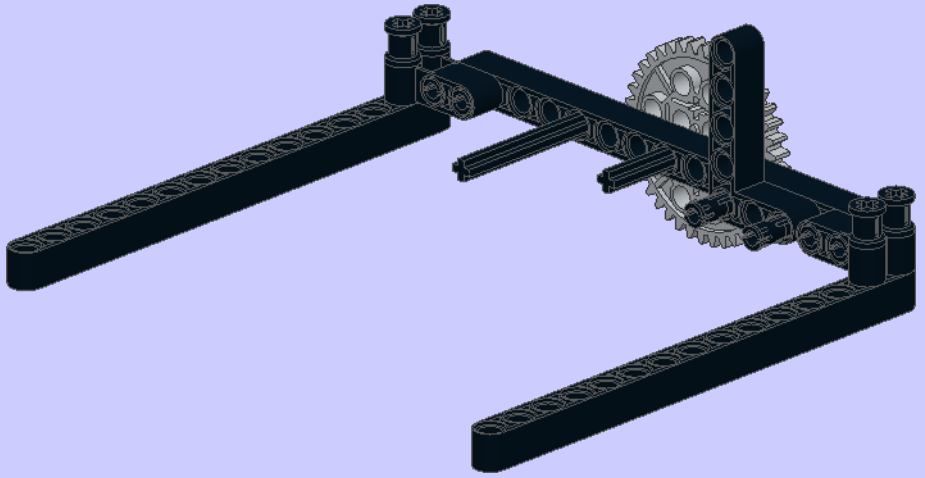

**5**

1x

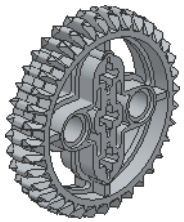

1x

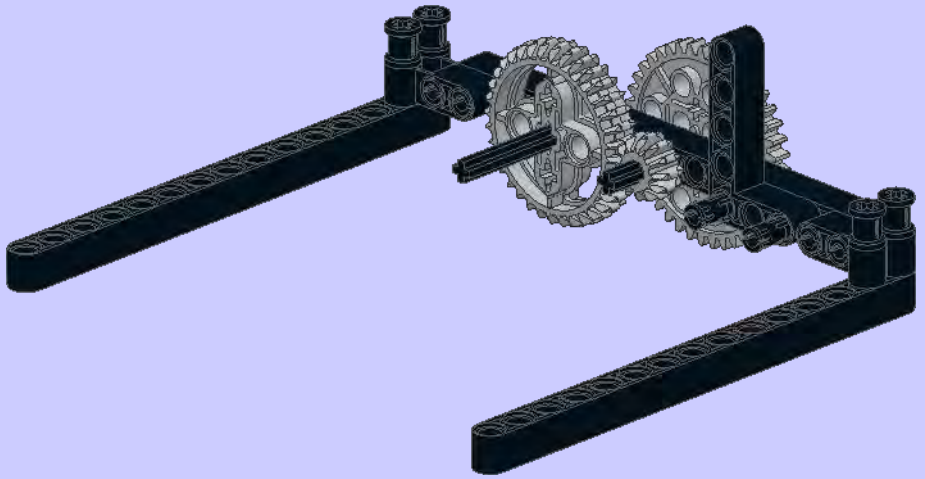

**6**

15

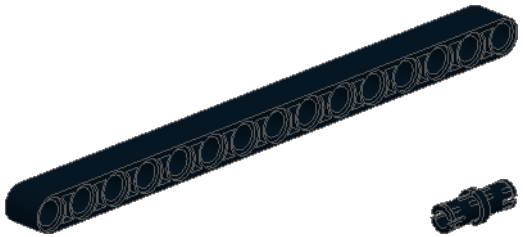

1x



4x

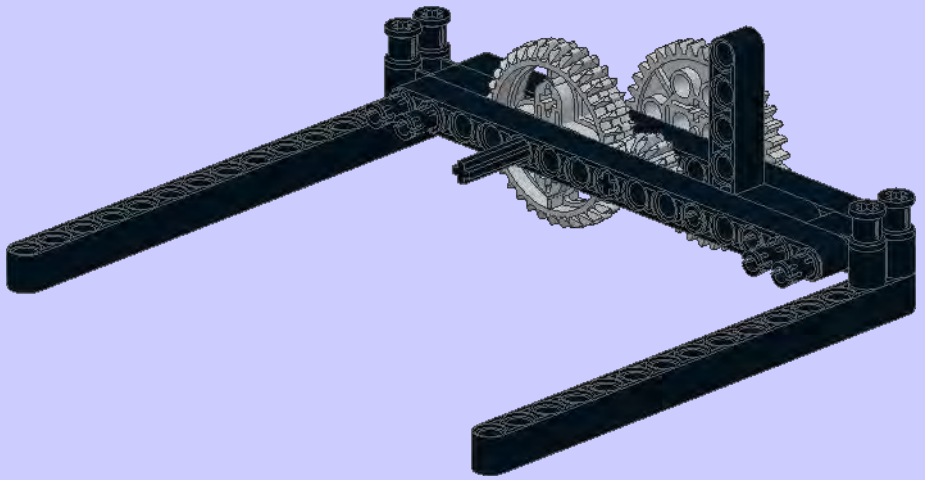

7

2x

4x

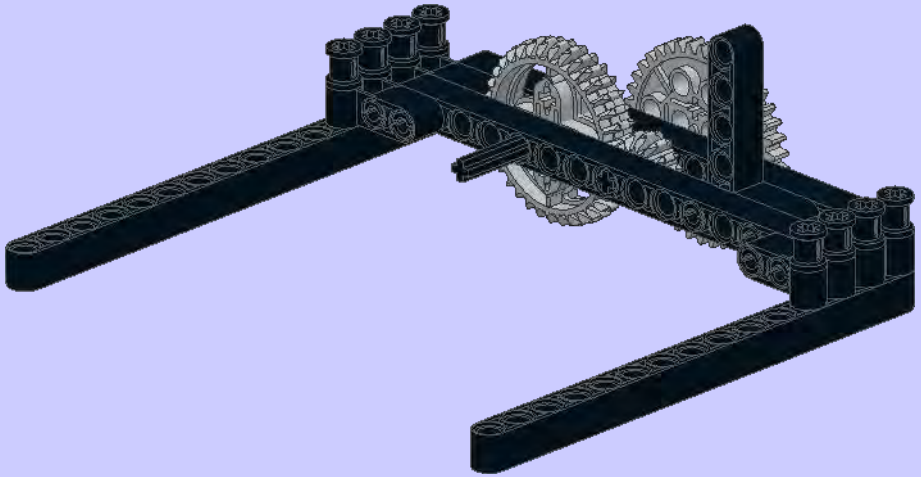

8

2x

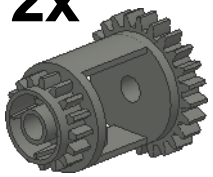

1x

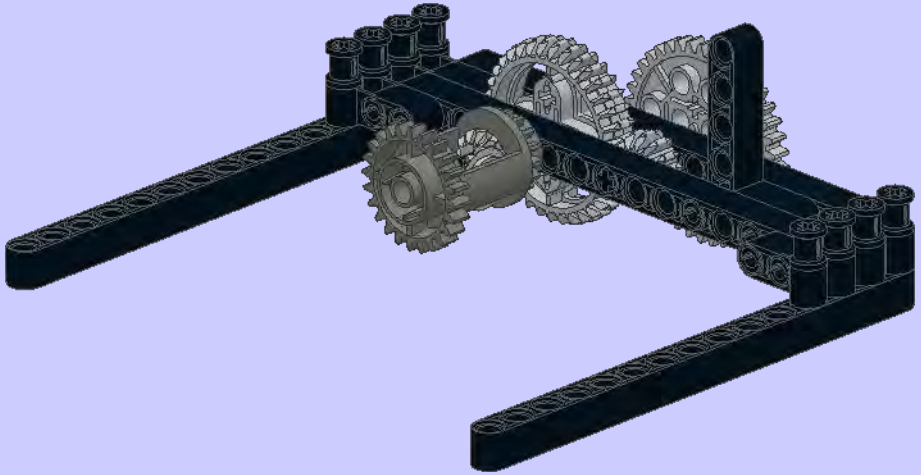

9

2x

1x

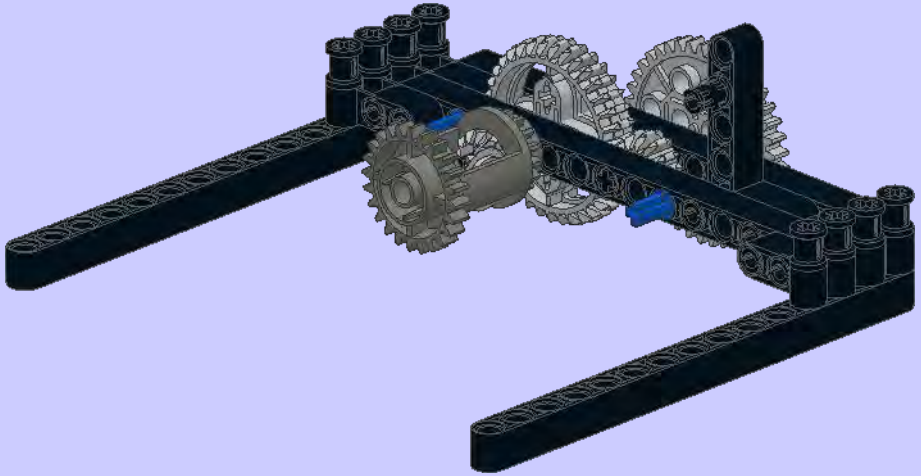

**10**

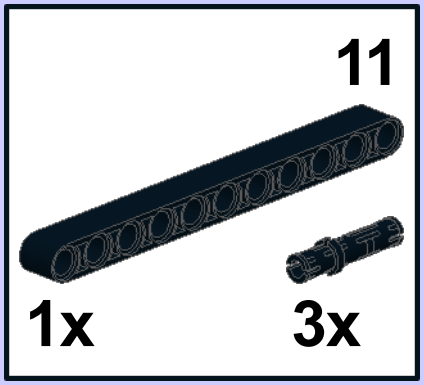


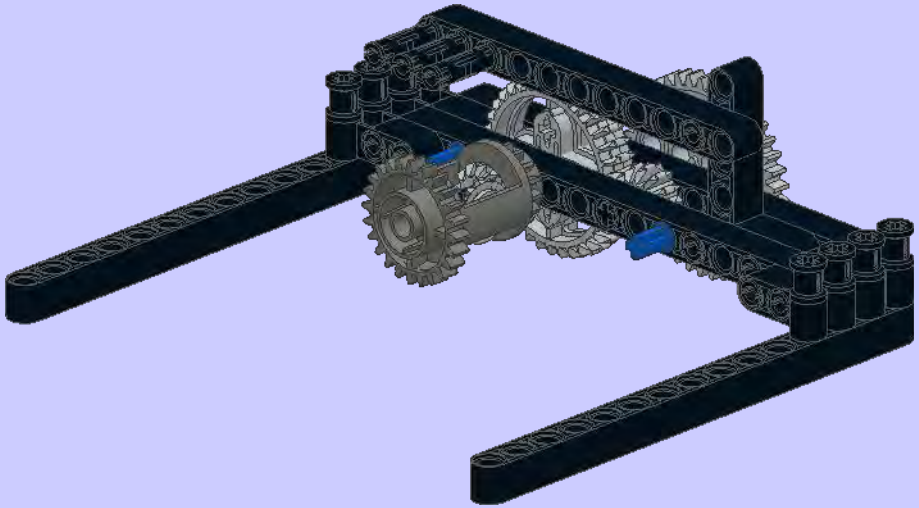

**11**

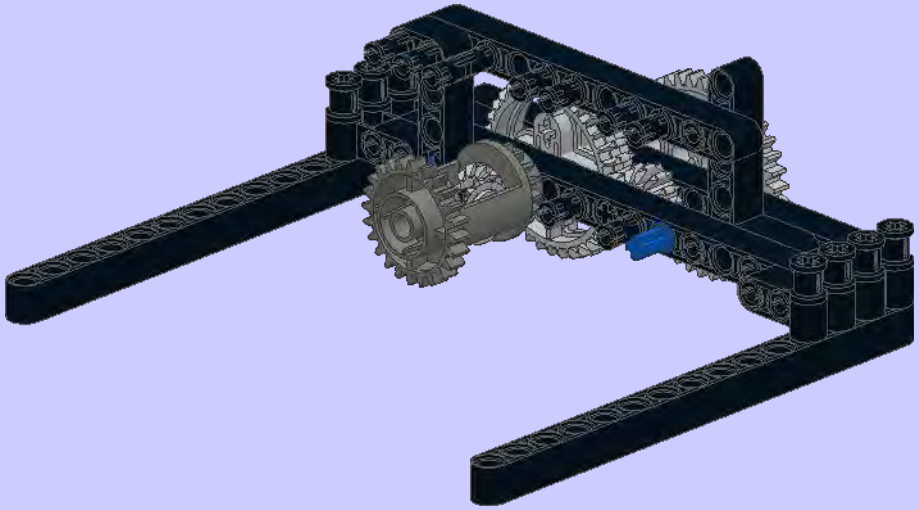

**12**

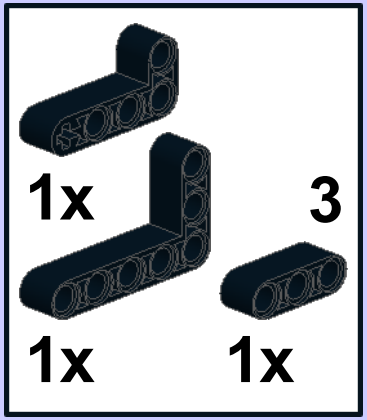


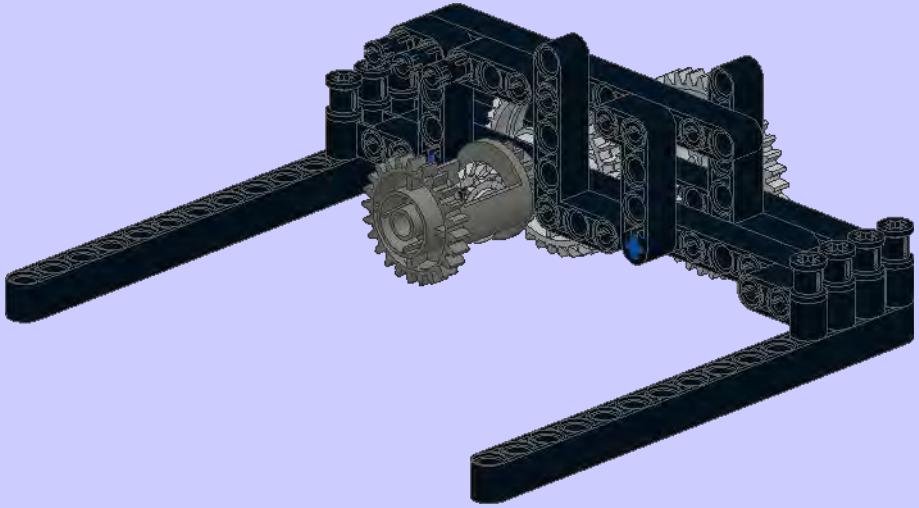

13

1x

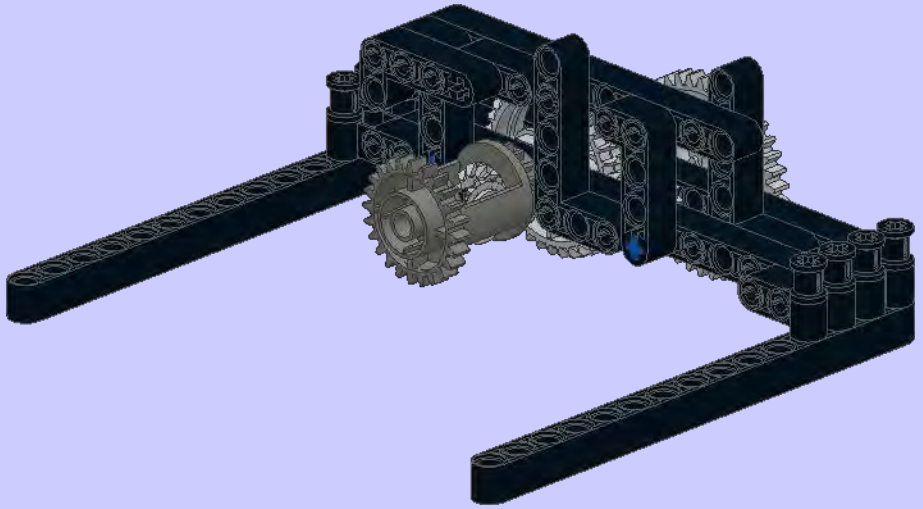

14

2x

4x

4x

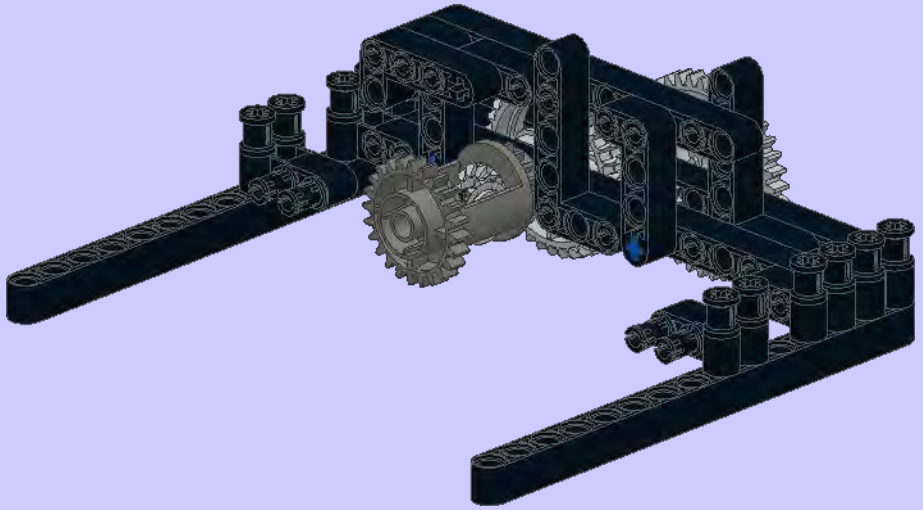

15

1x

5

1x

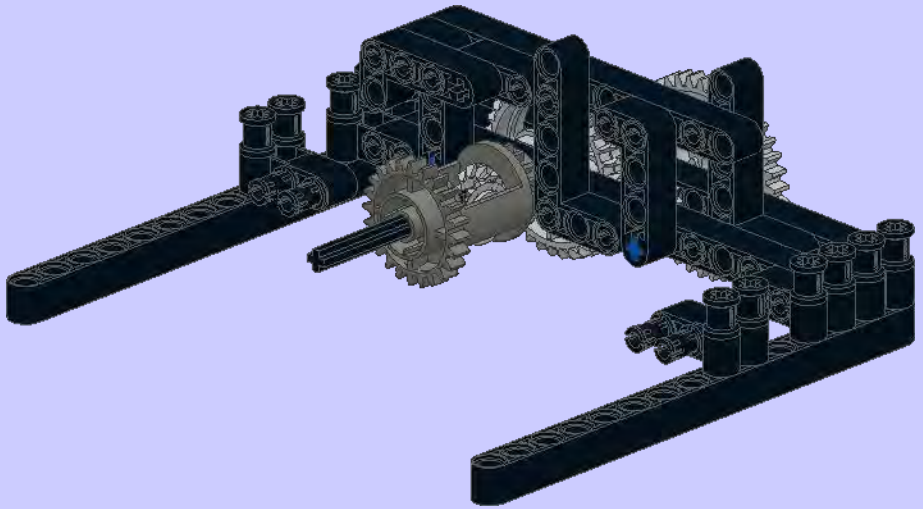

**16**

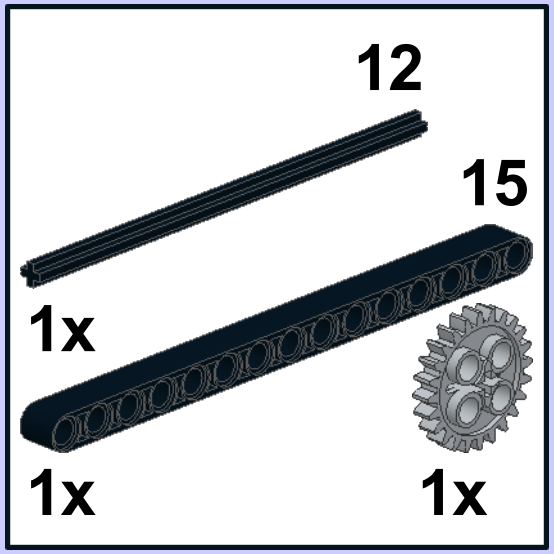


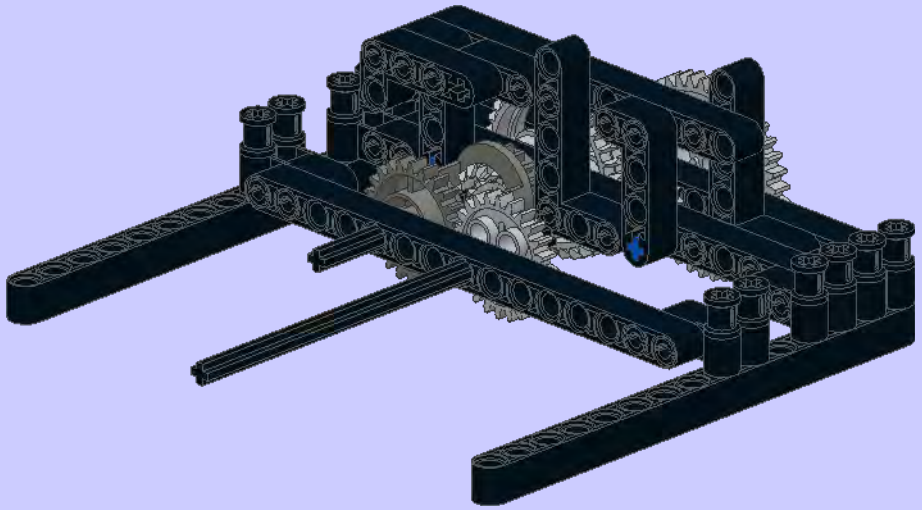

**17**

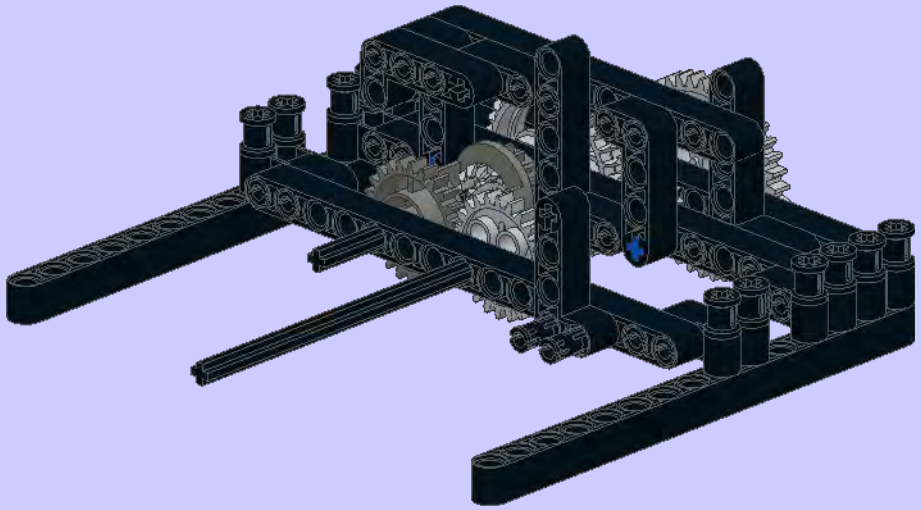

**18**

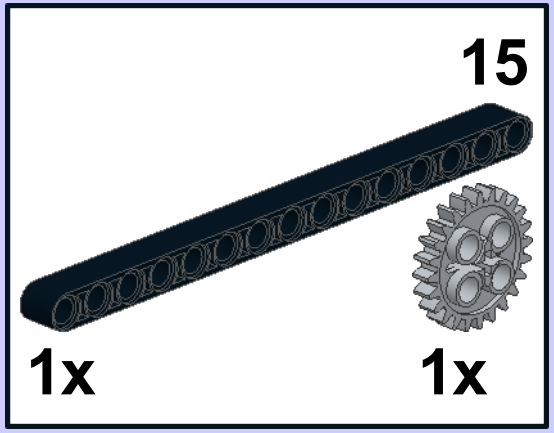


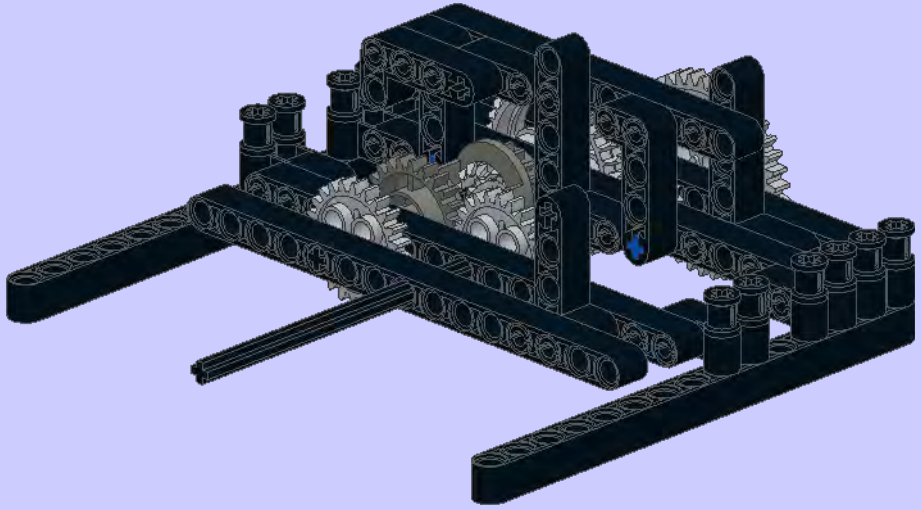

19

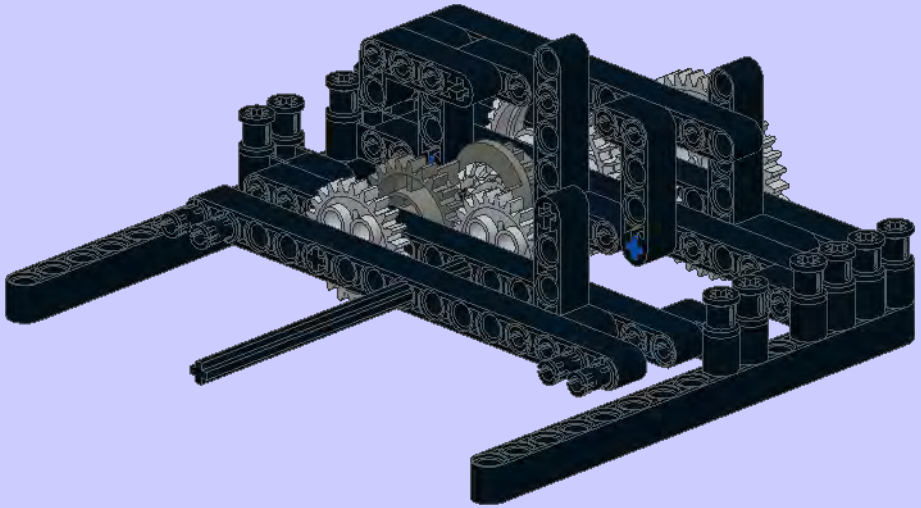

20

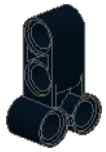

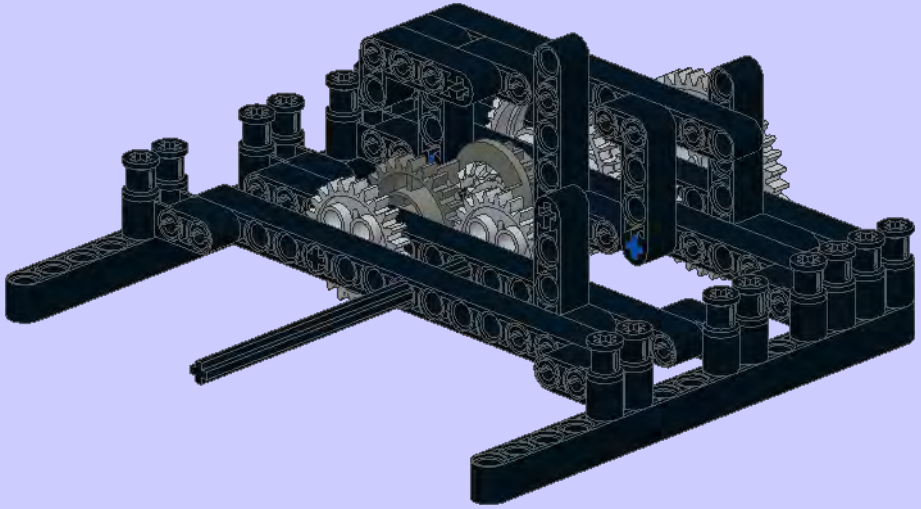

21

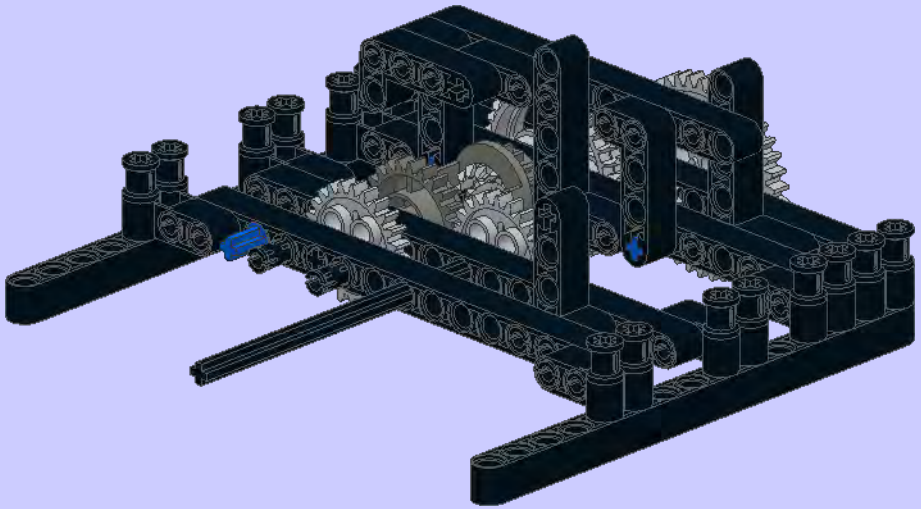

**22**

3

1x

4

1x

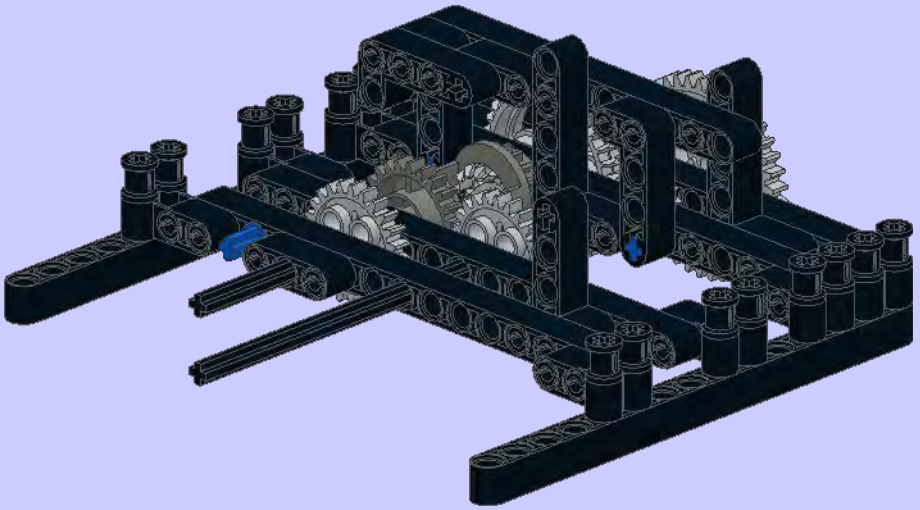

**23**

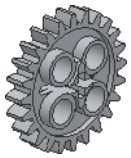

1x

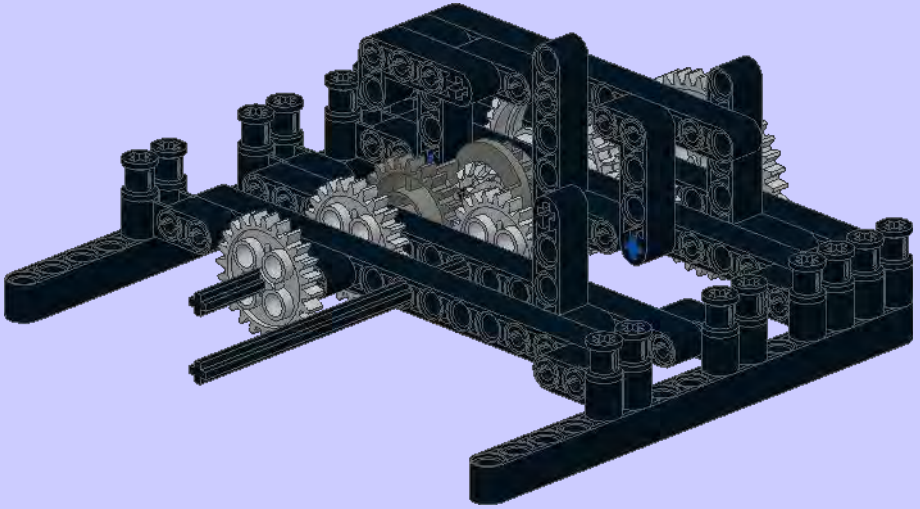

**24**

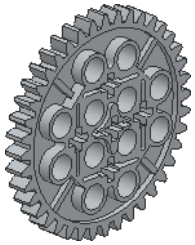

15

1x

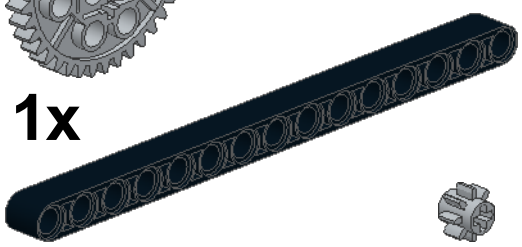



1x

1x

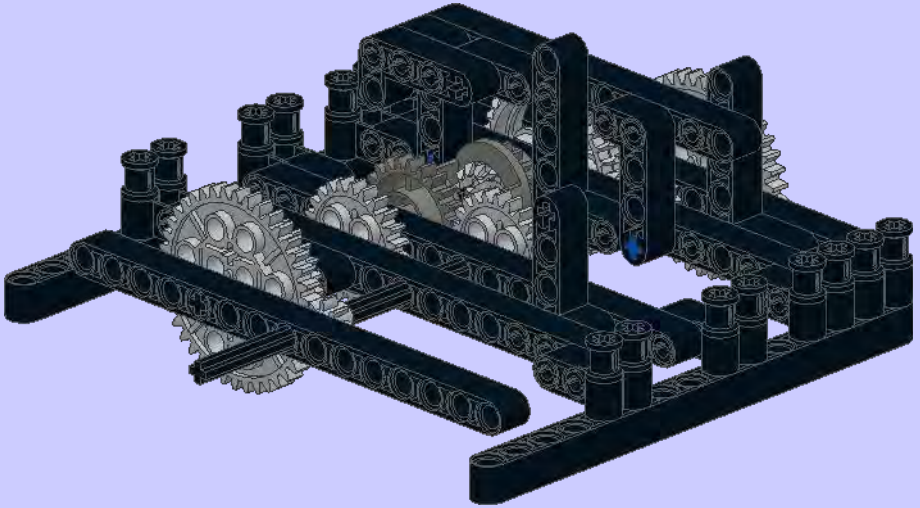

**25**

4x

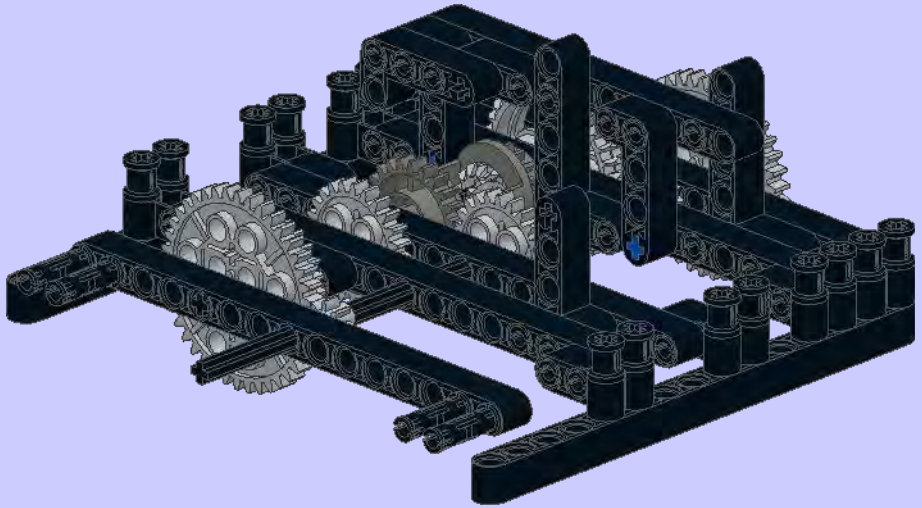

**26**

2x

4x

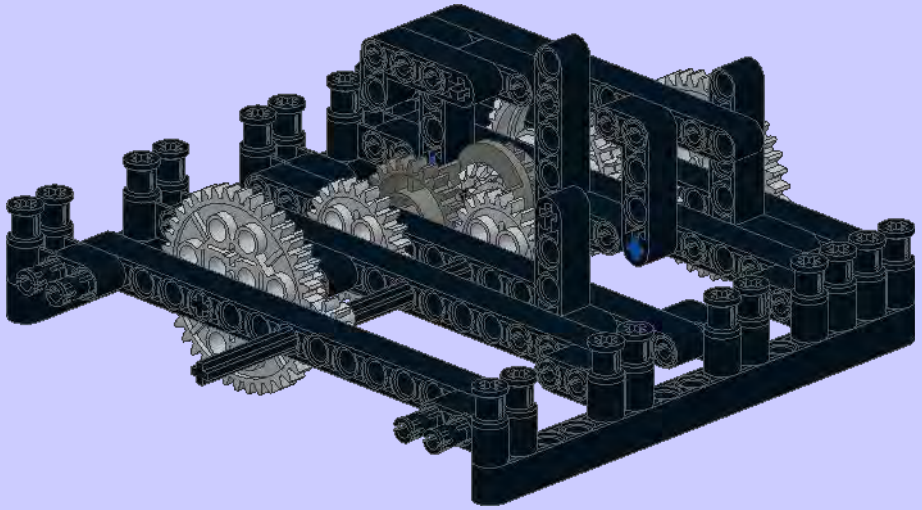

**27**

6

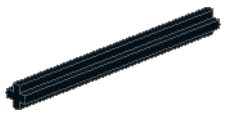

15

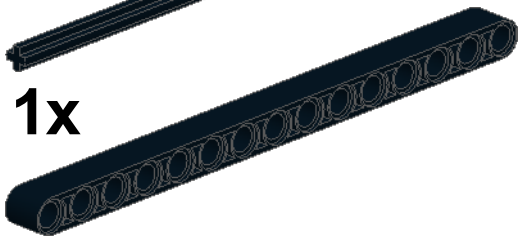

1x

1x

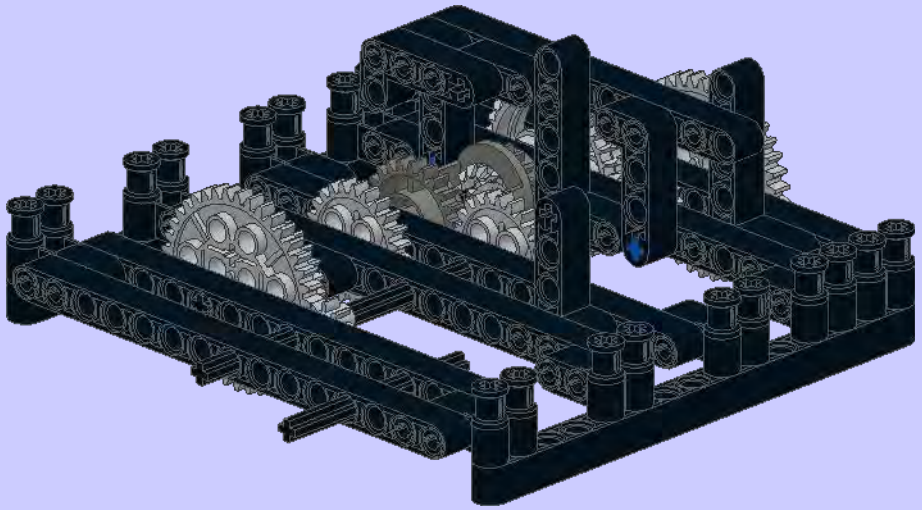

28

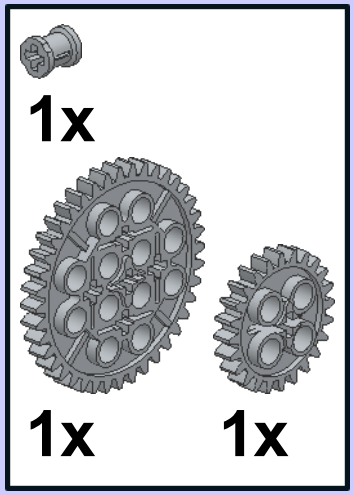


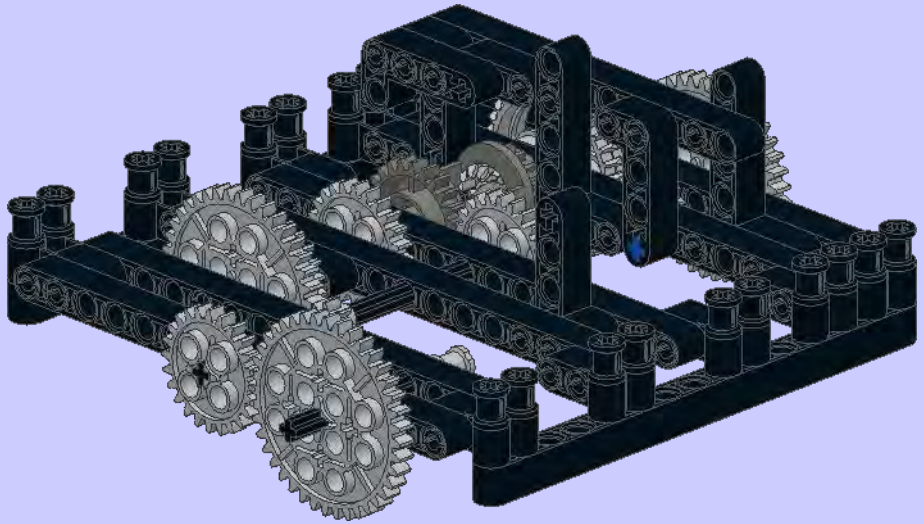

29

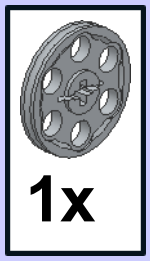


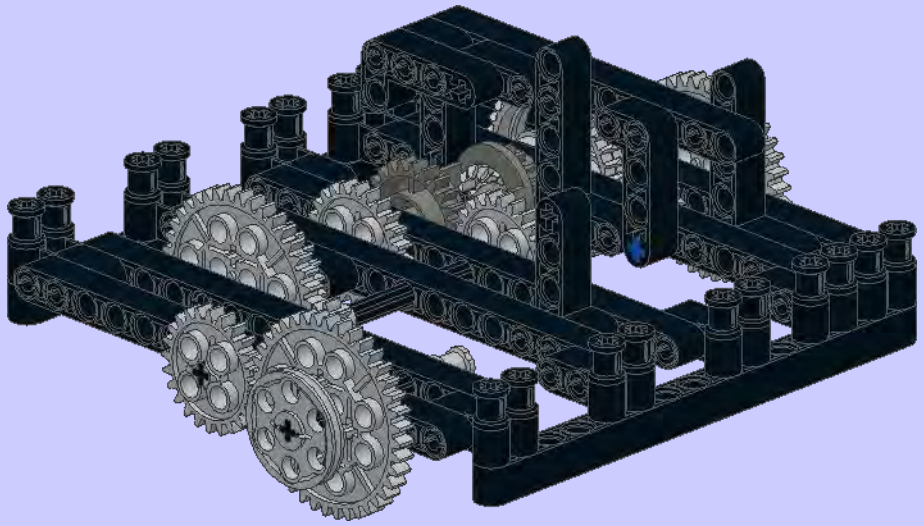

30

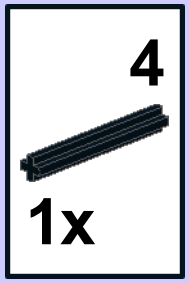


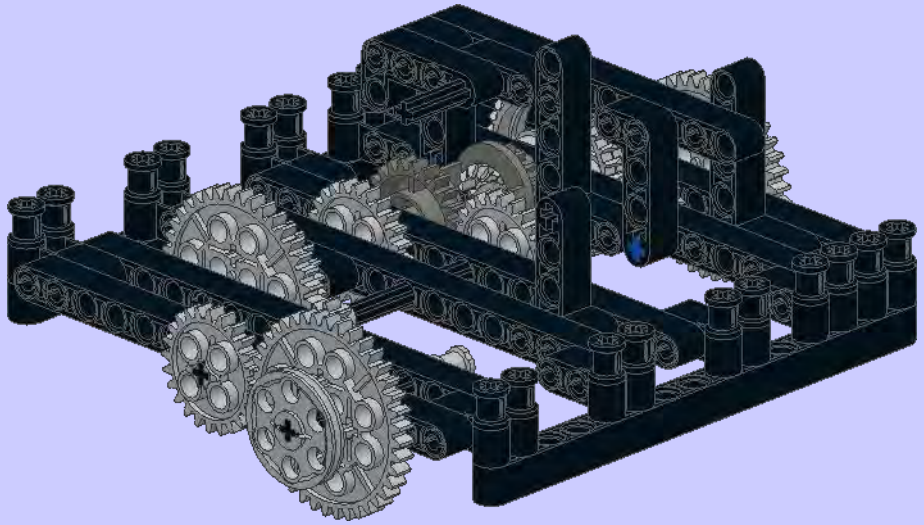

**31**

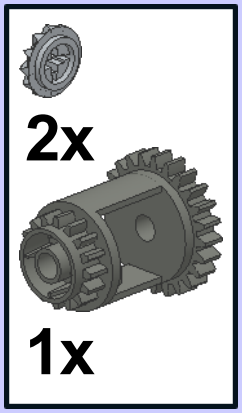


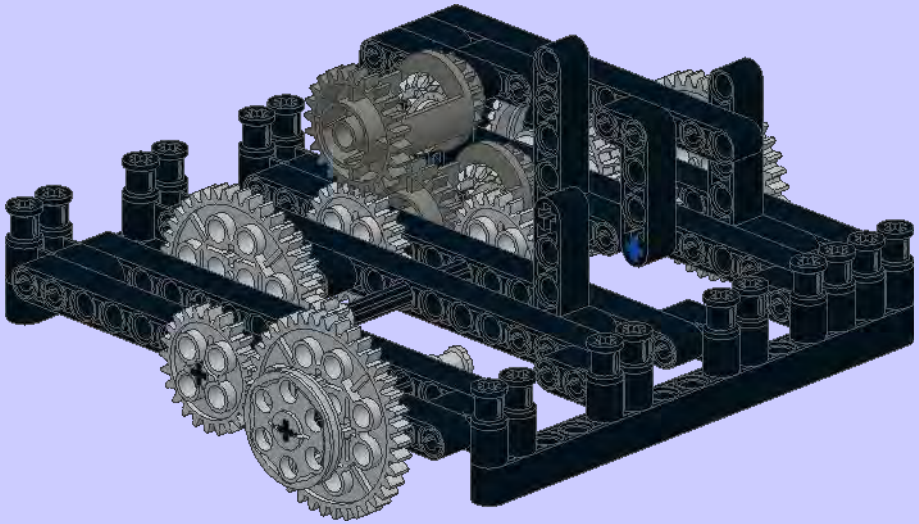

**32**

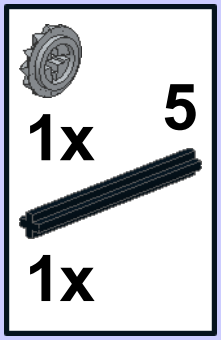


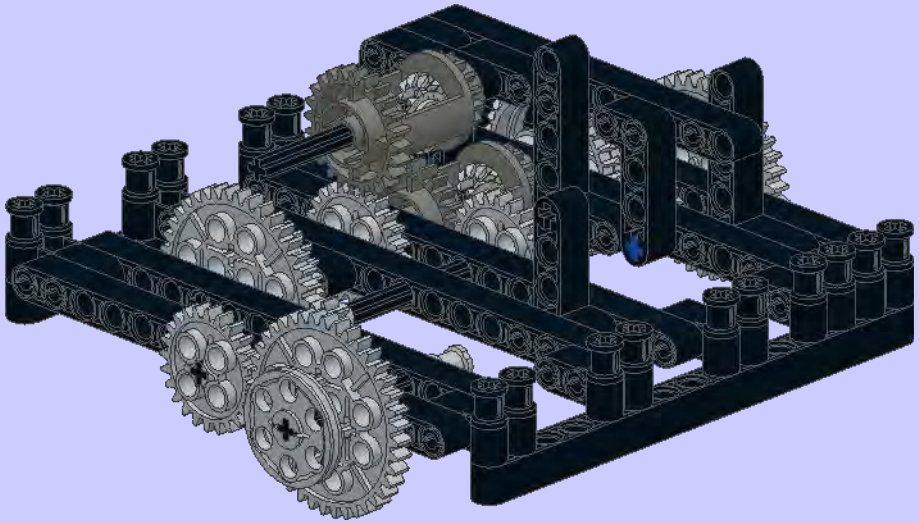

**33**

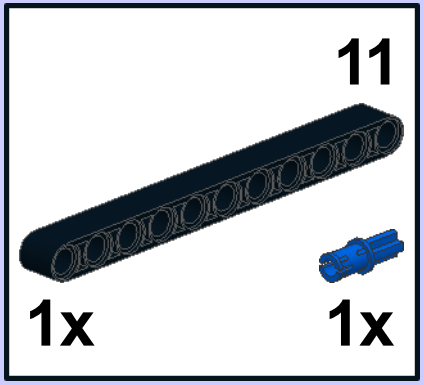


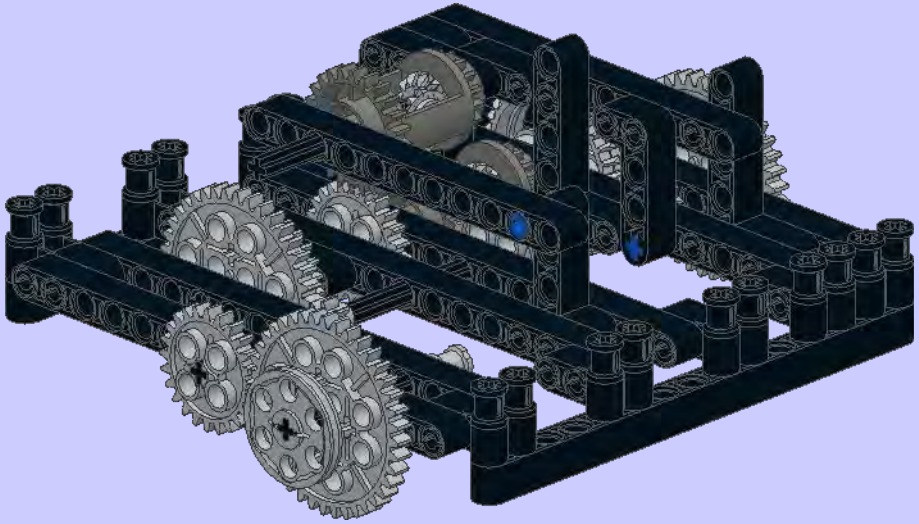

34

4x

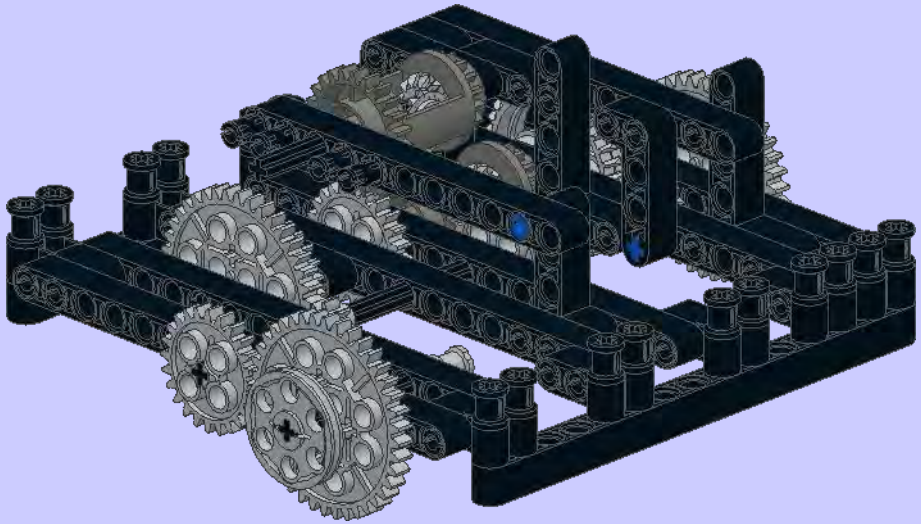

35

3

1x

1x

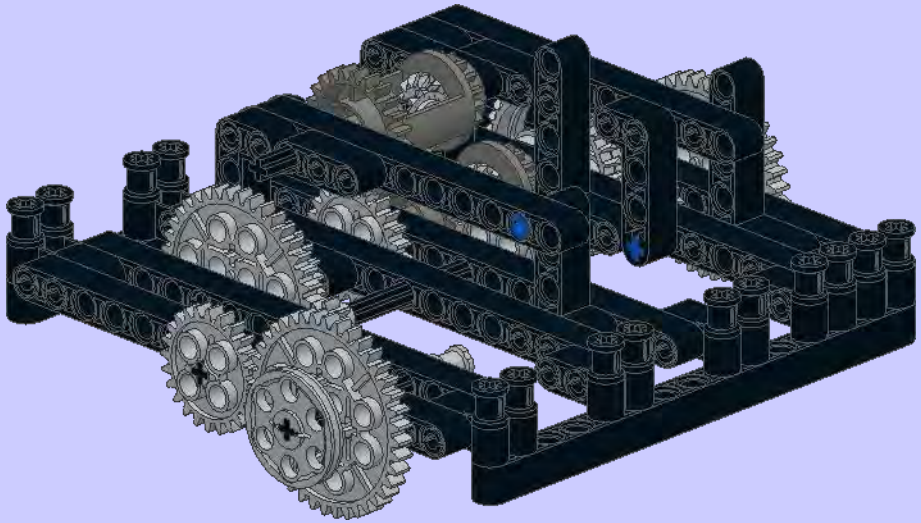

36

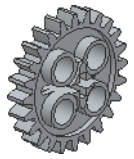

1x

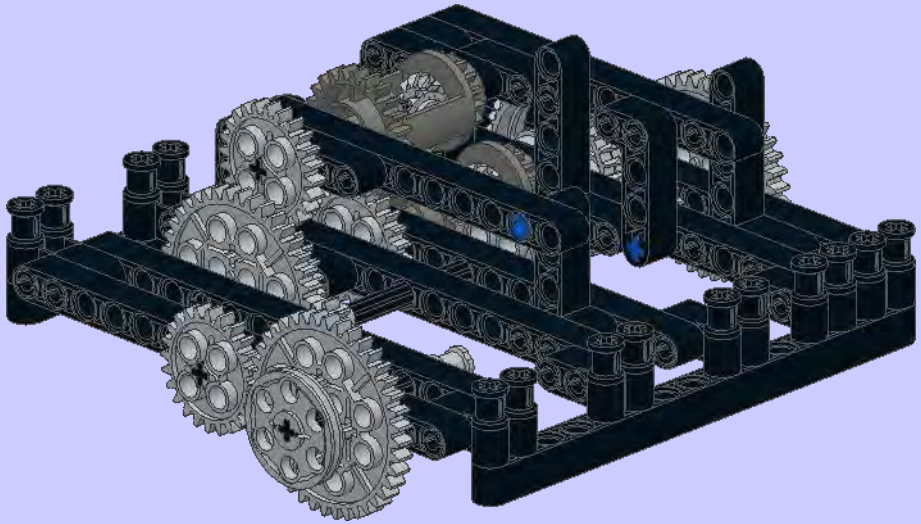

37

8x

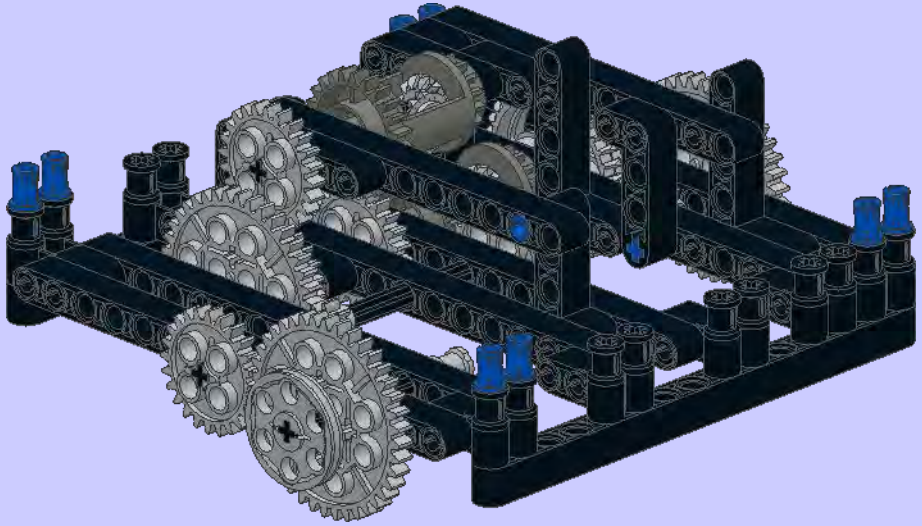

38

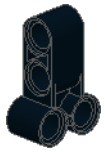

4x

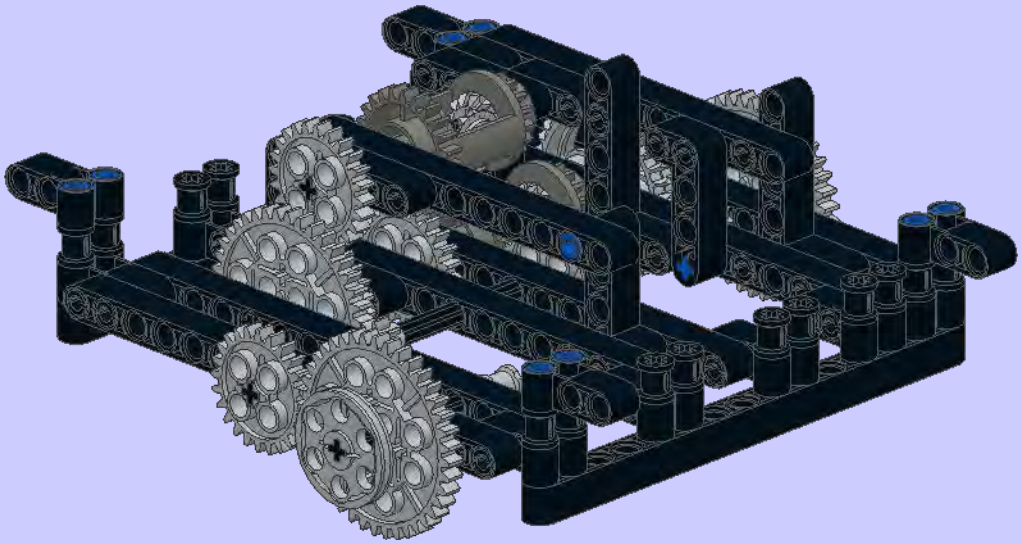

11

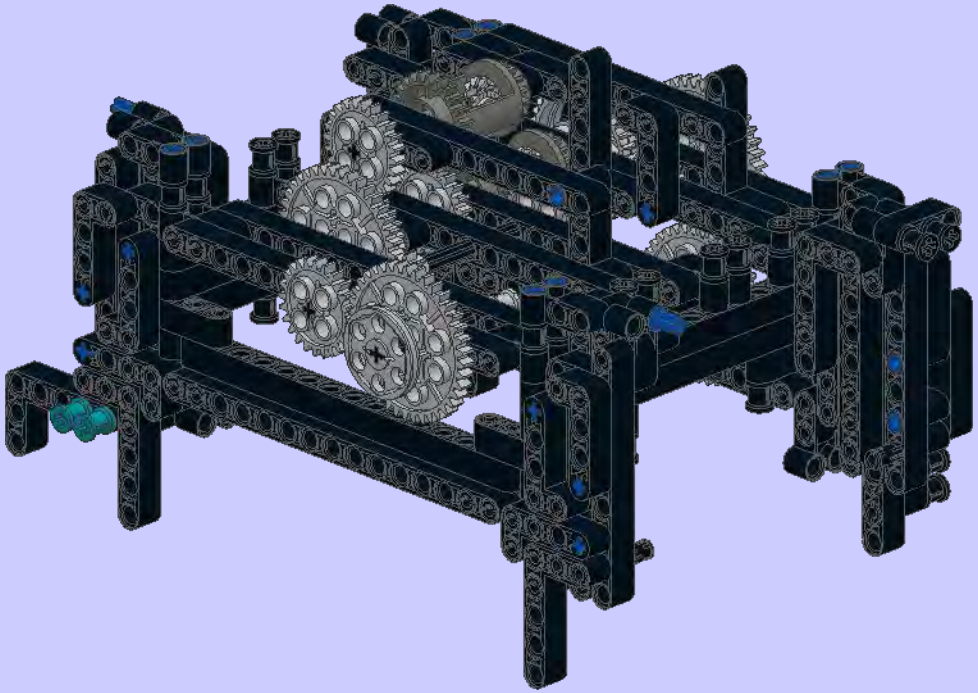

12

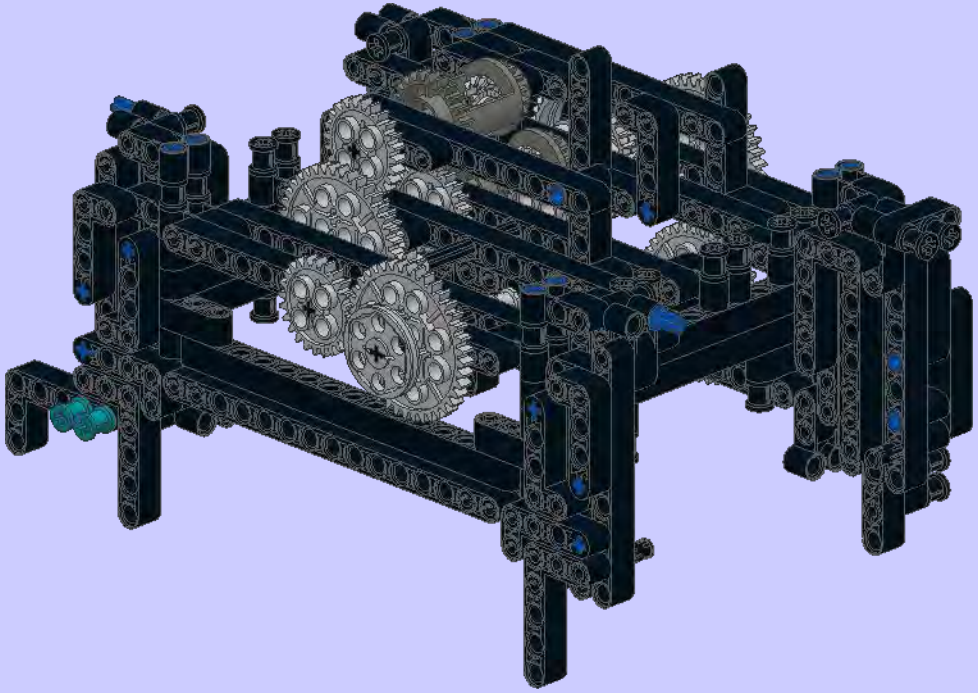

13

3x

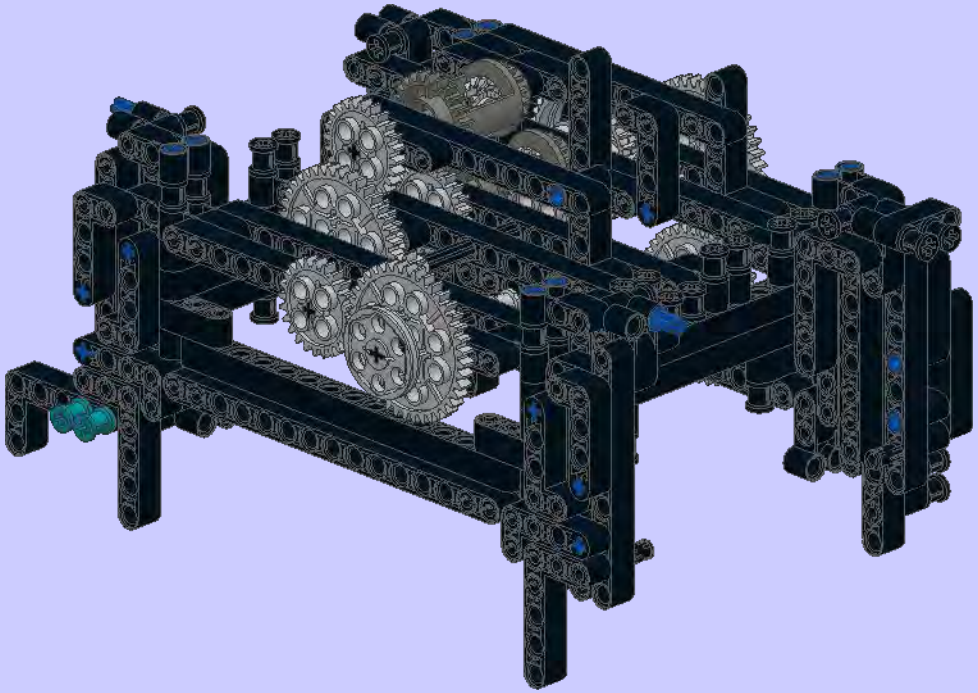

14

3x

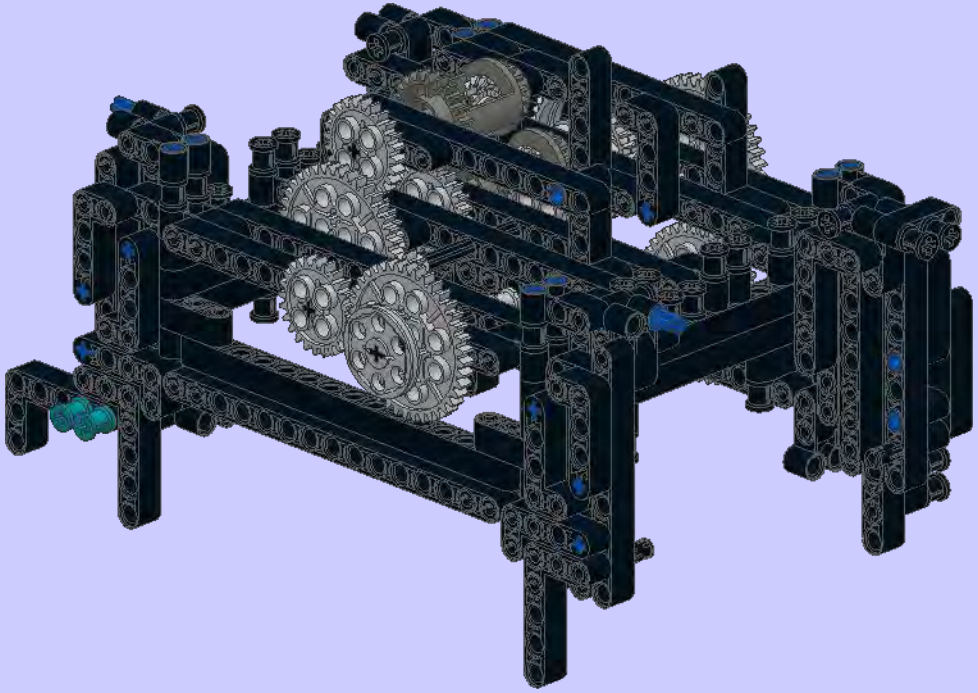

1

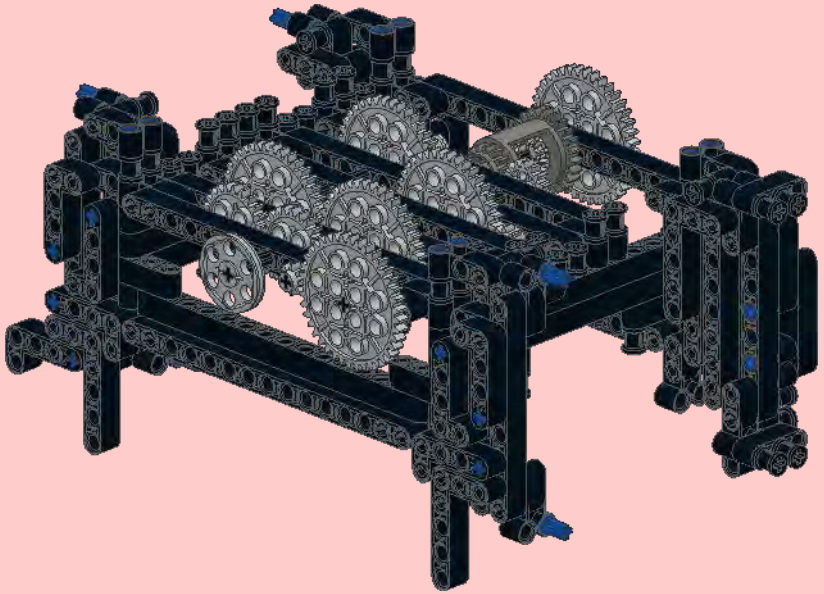

2

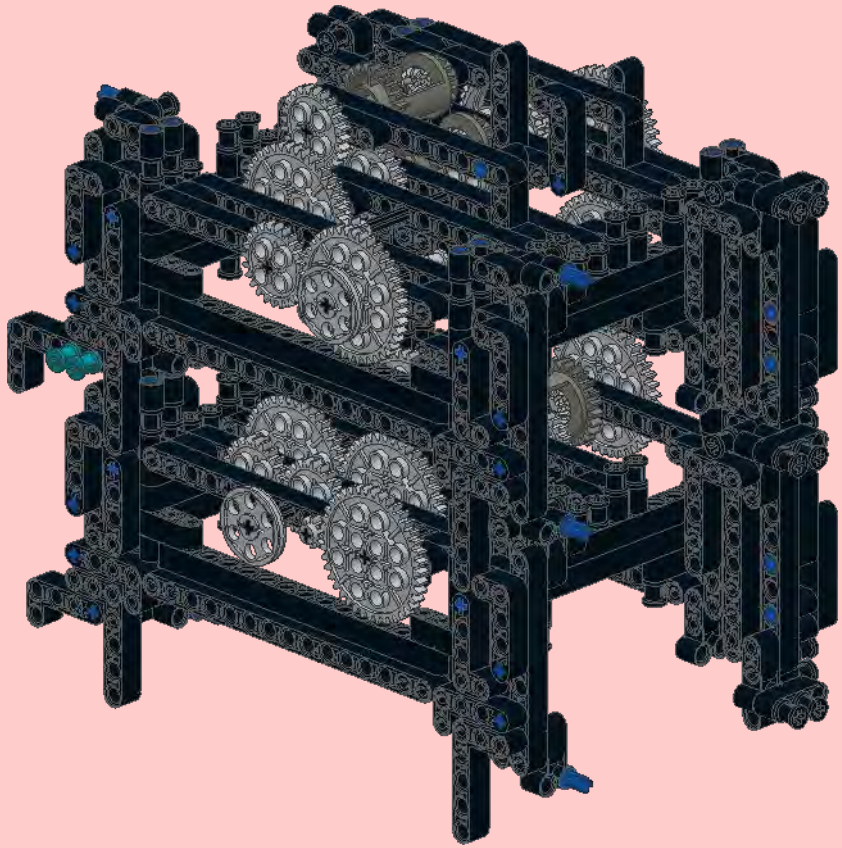

3

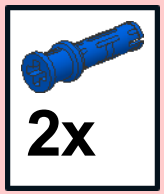


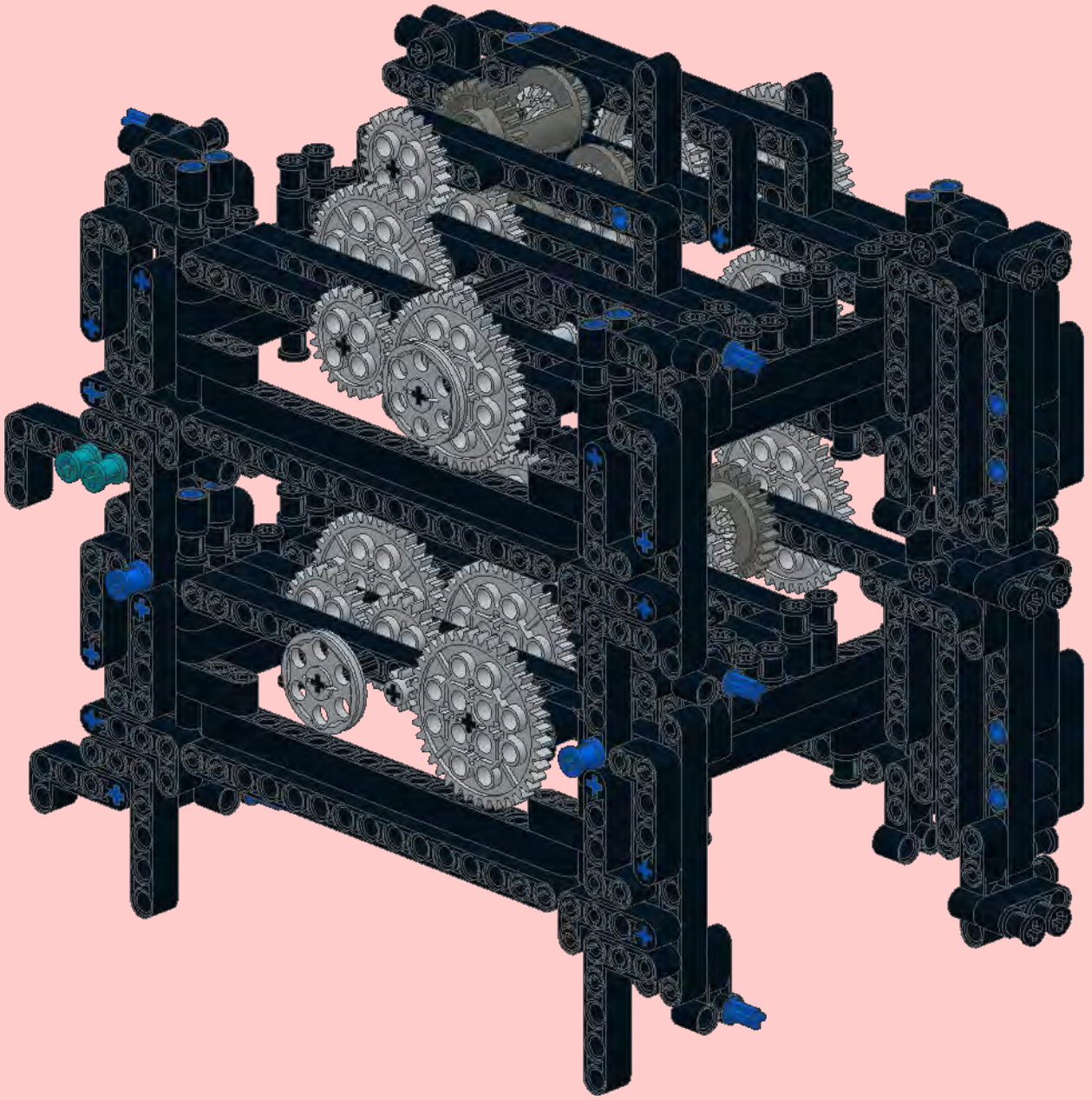

4

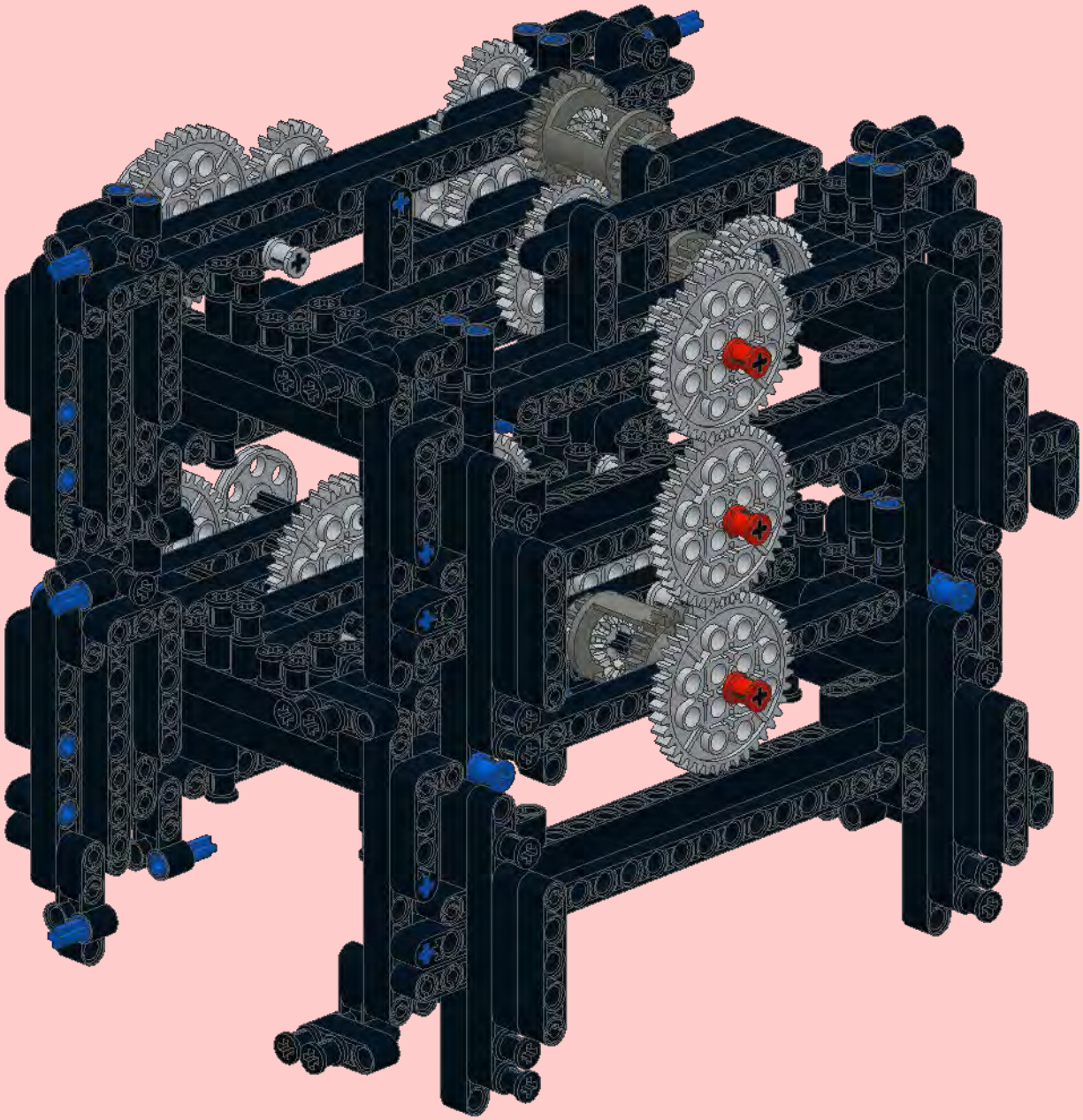

# 6

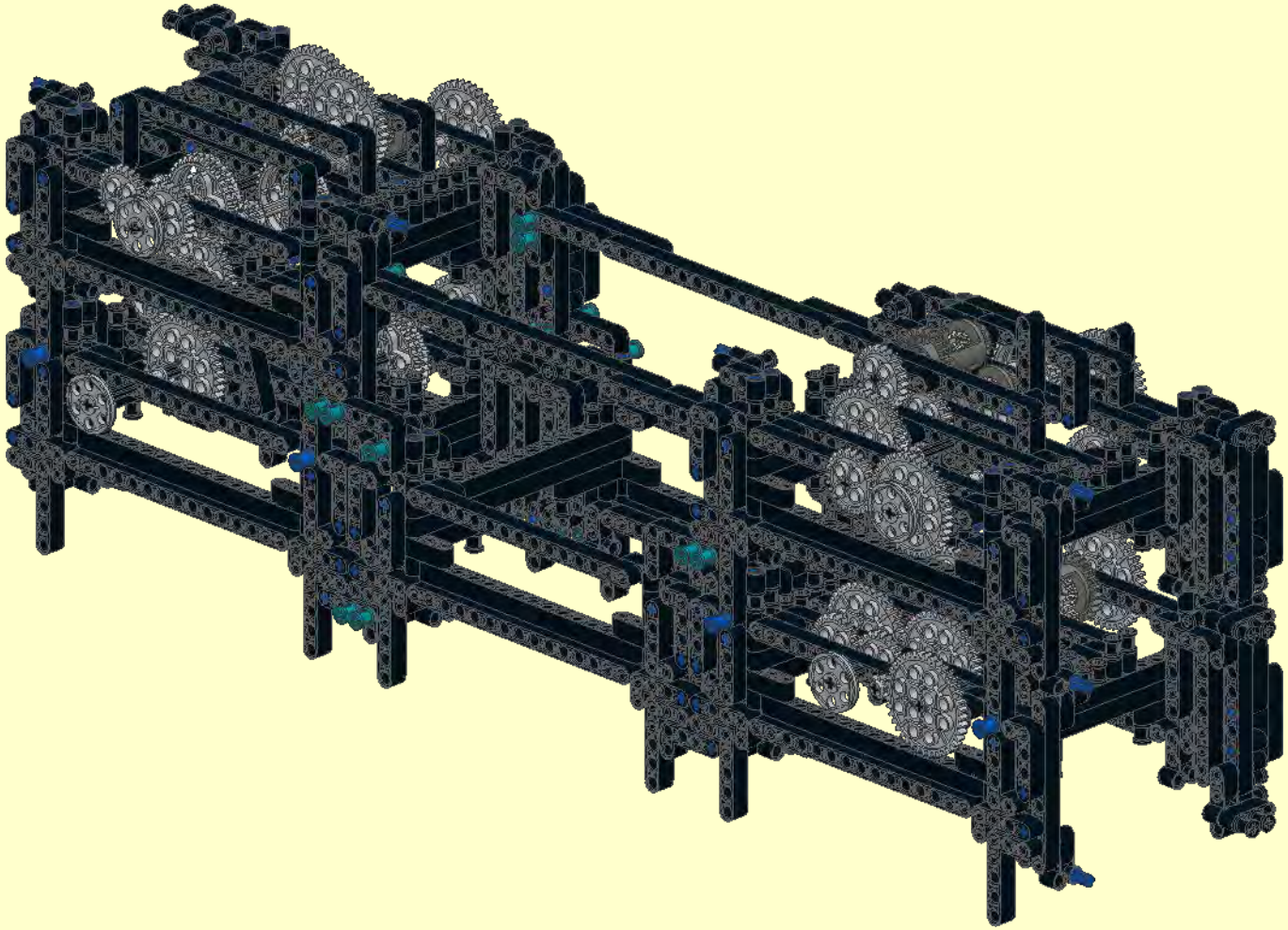

7

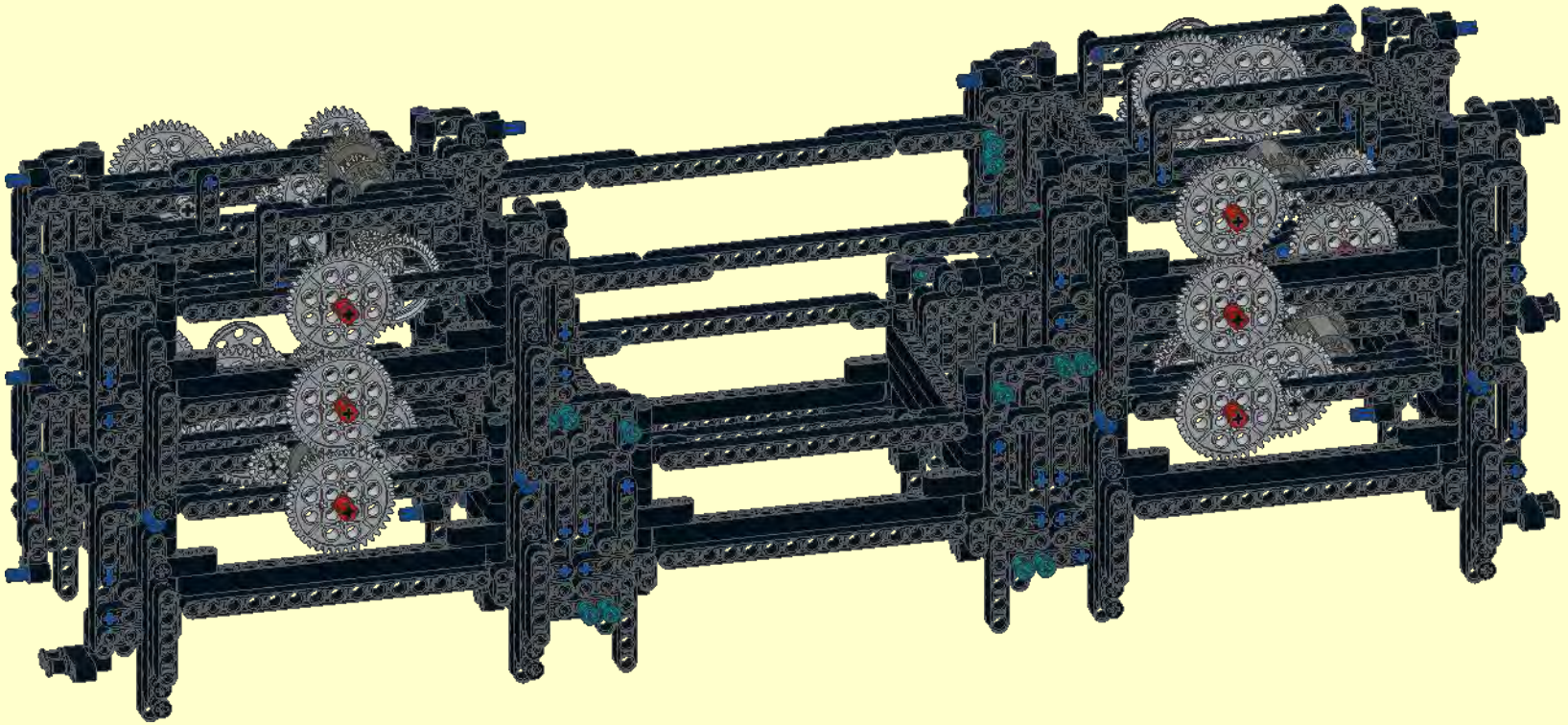

8

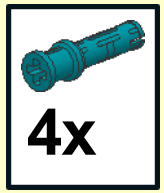


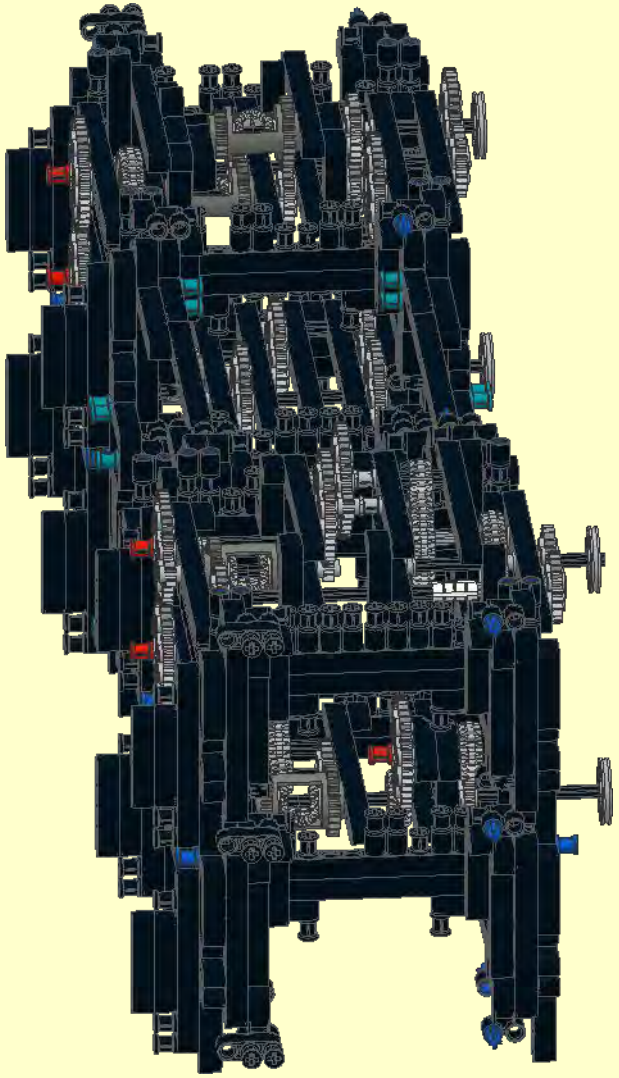

9

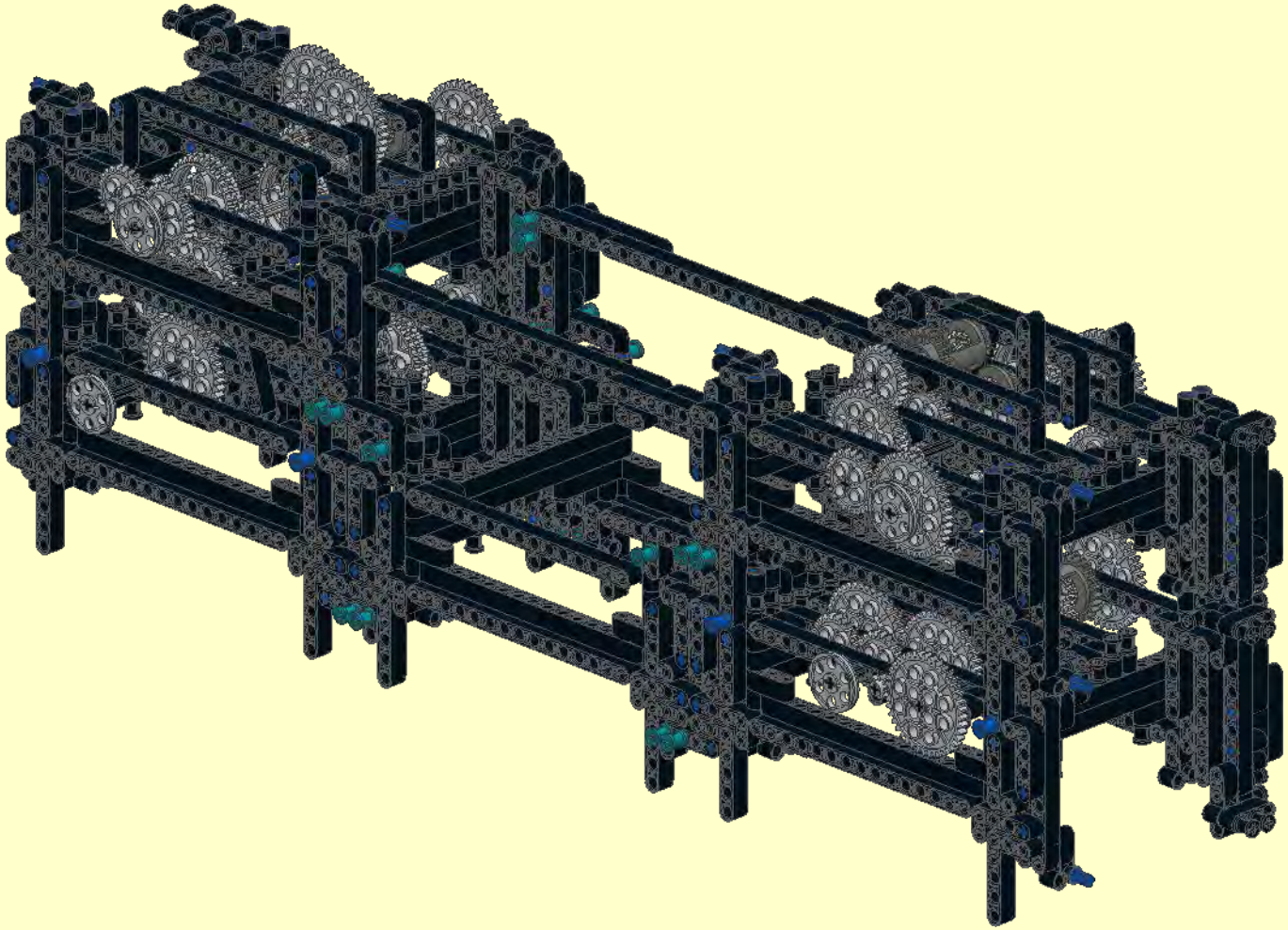

1

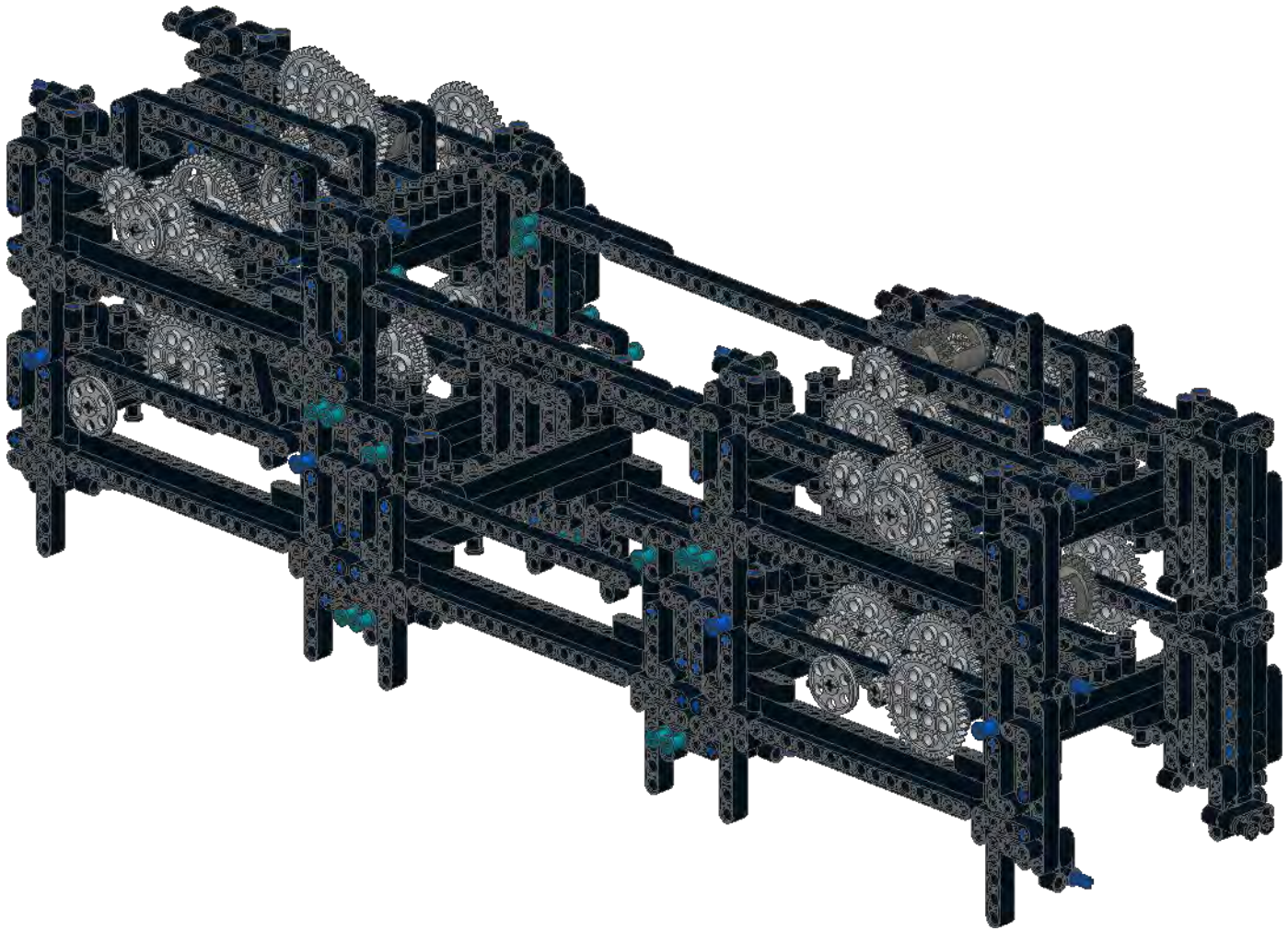

1

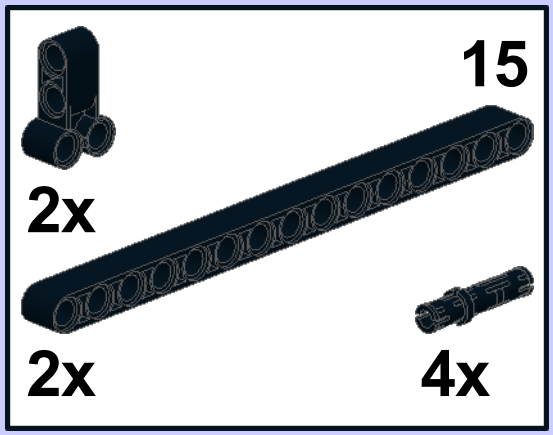


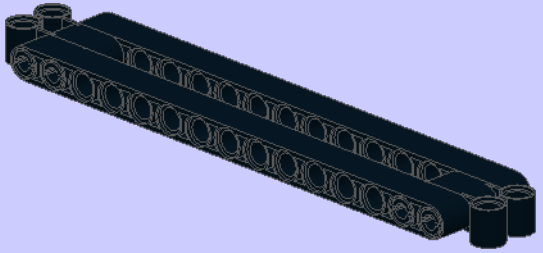

2

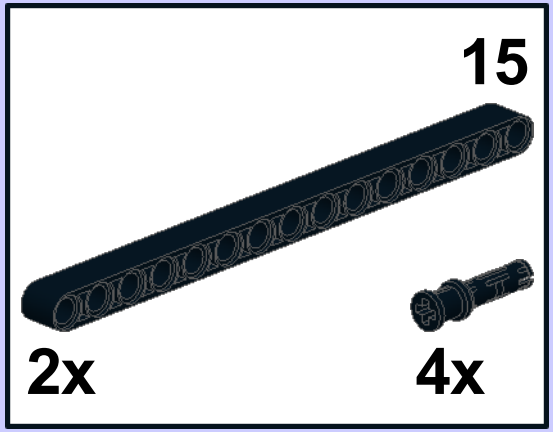


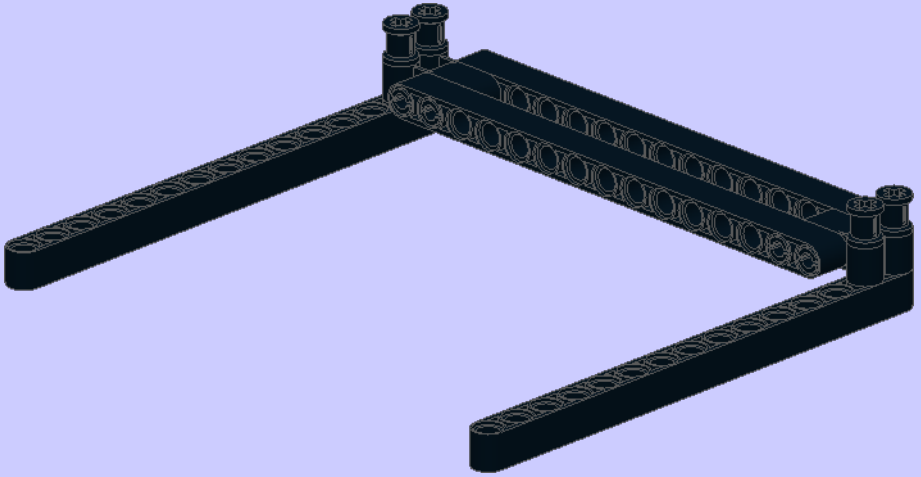

3

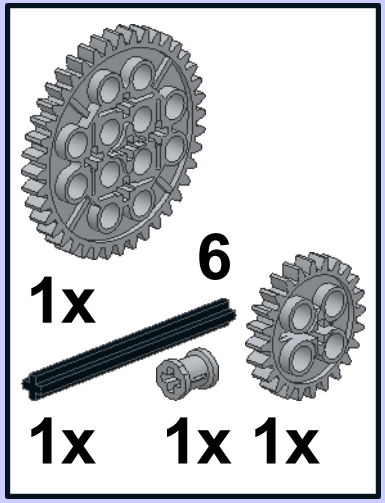


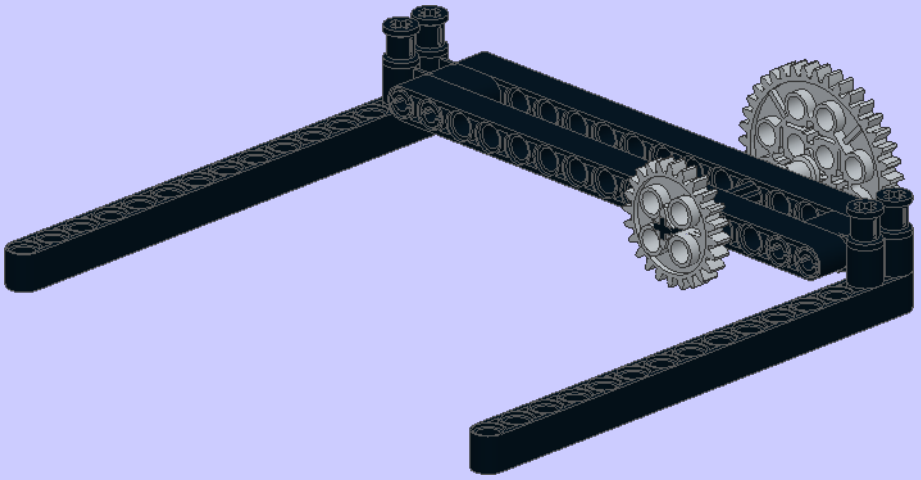

**4**

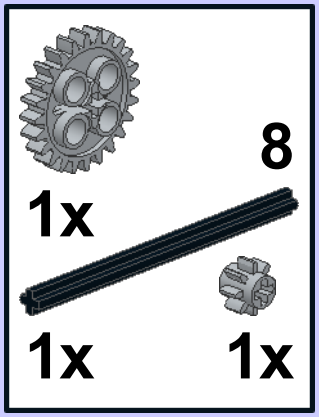


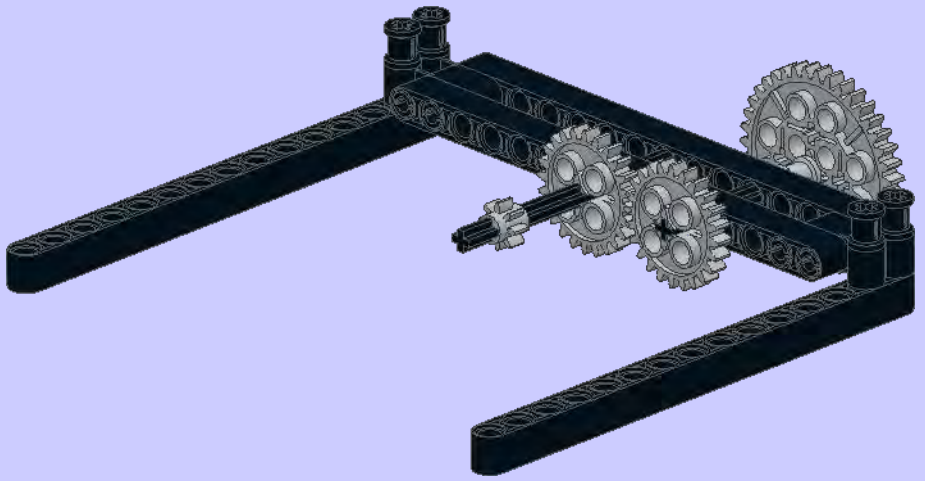

**5**

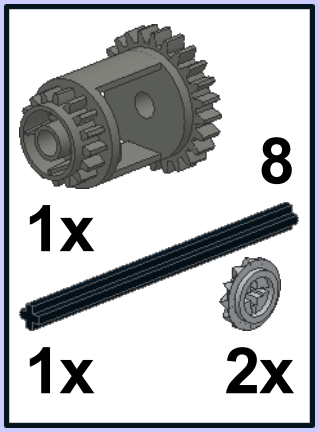


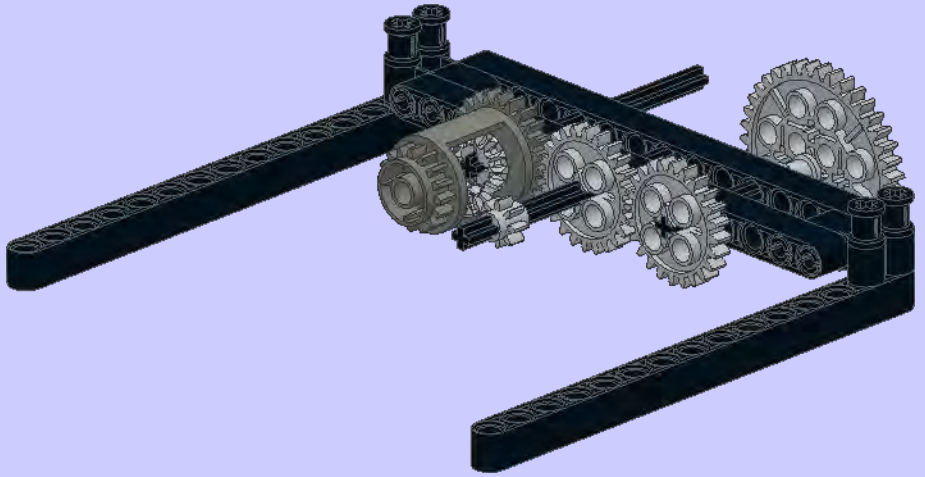

**6**

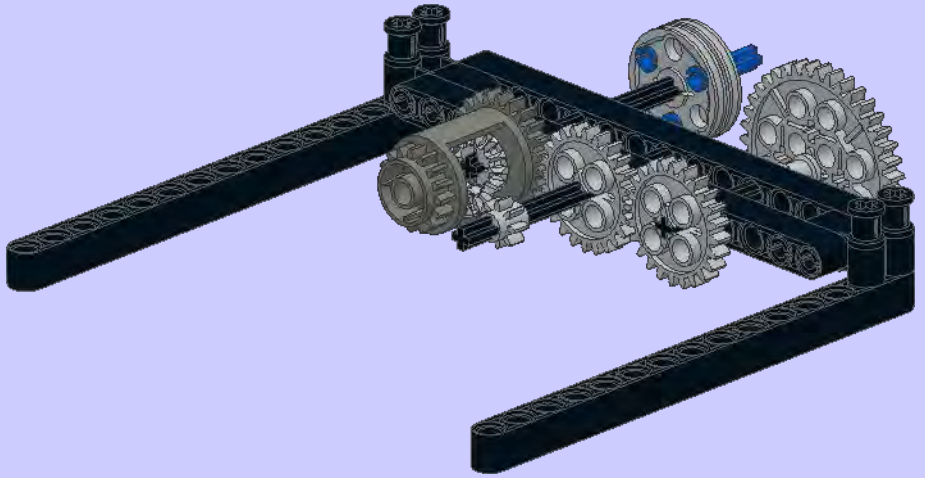

7

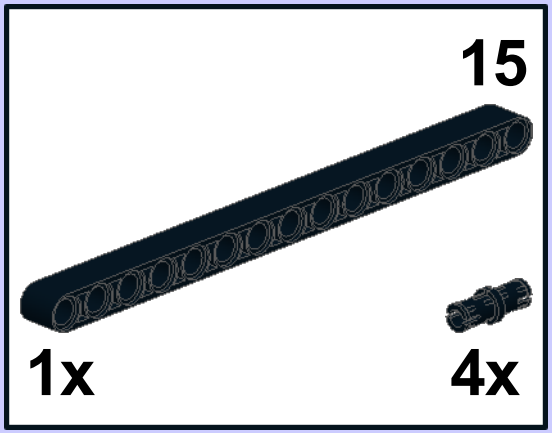


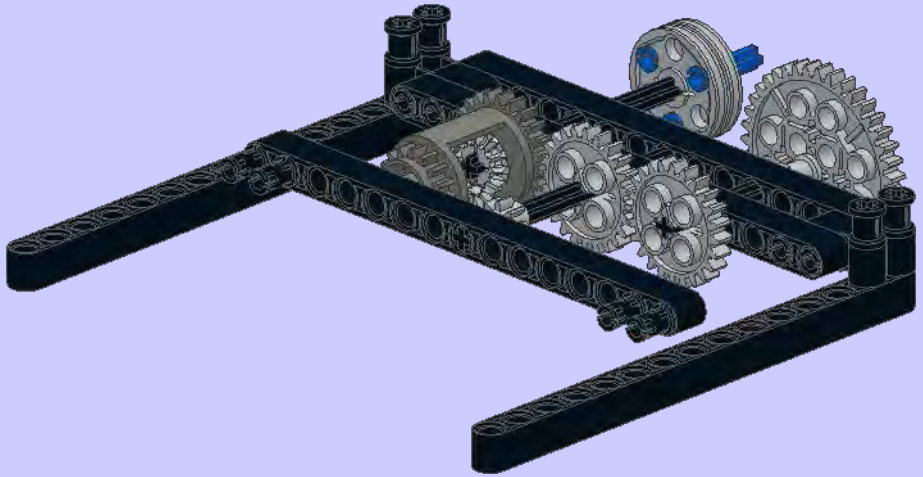

8

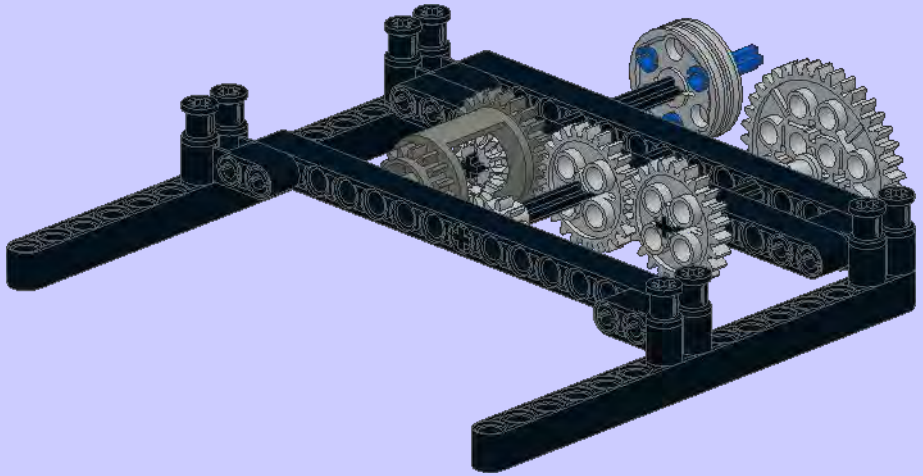

9

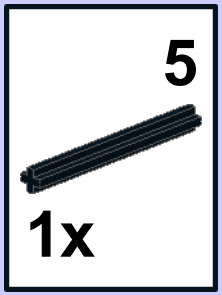


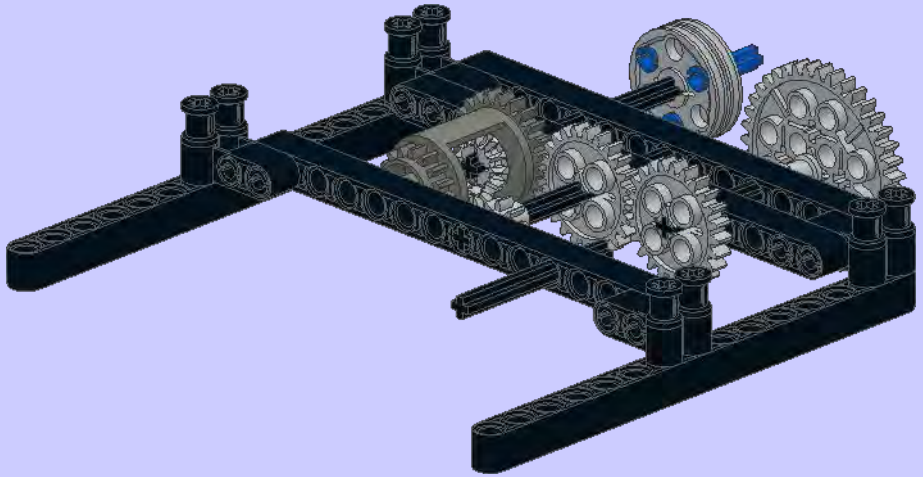

**10**

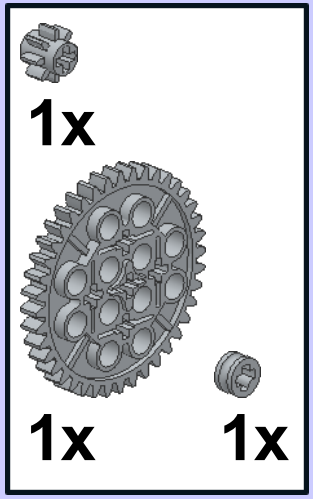


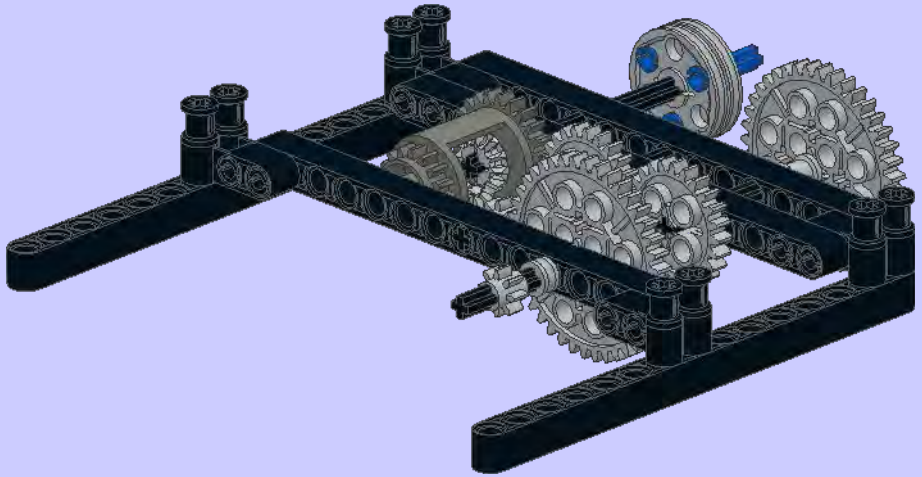

**11**

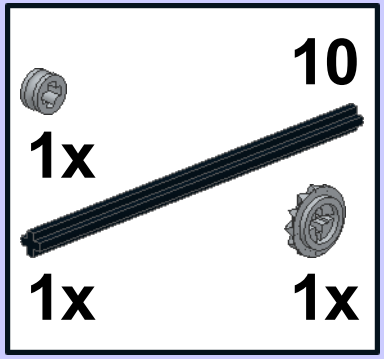


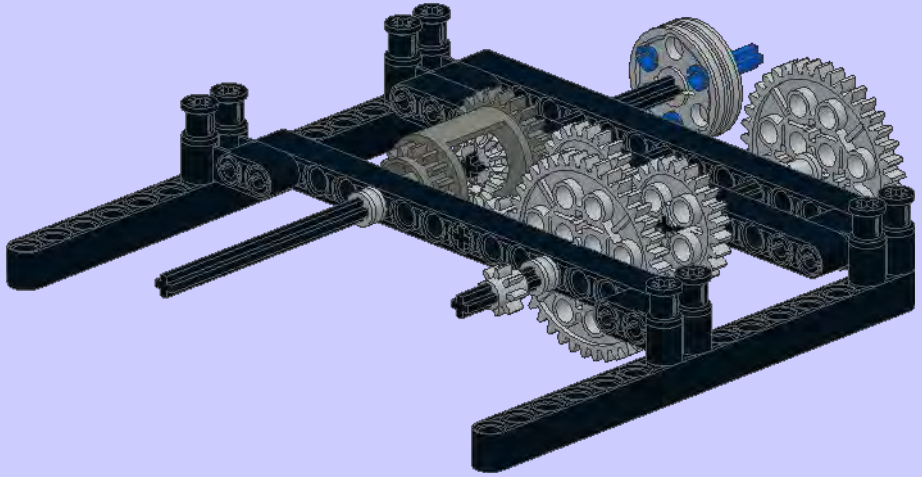

**12**

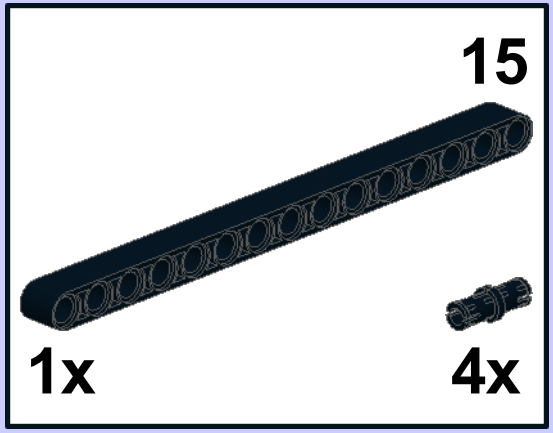


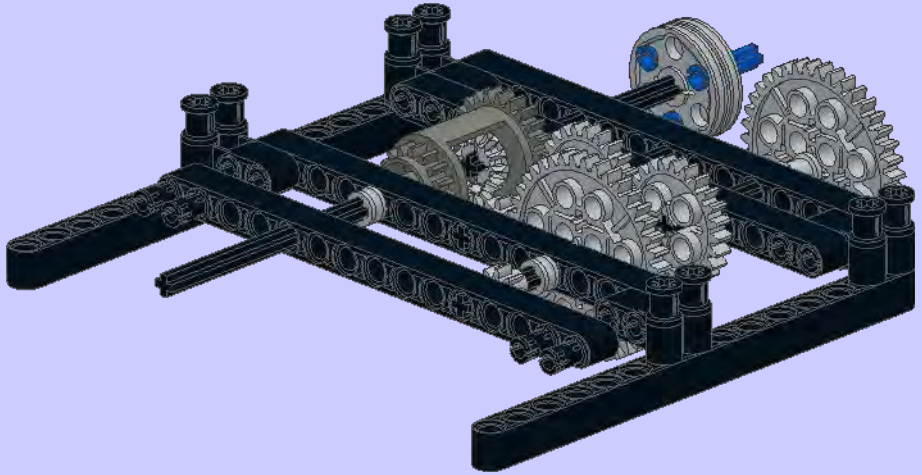

13

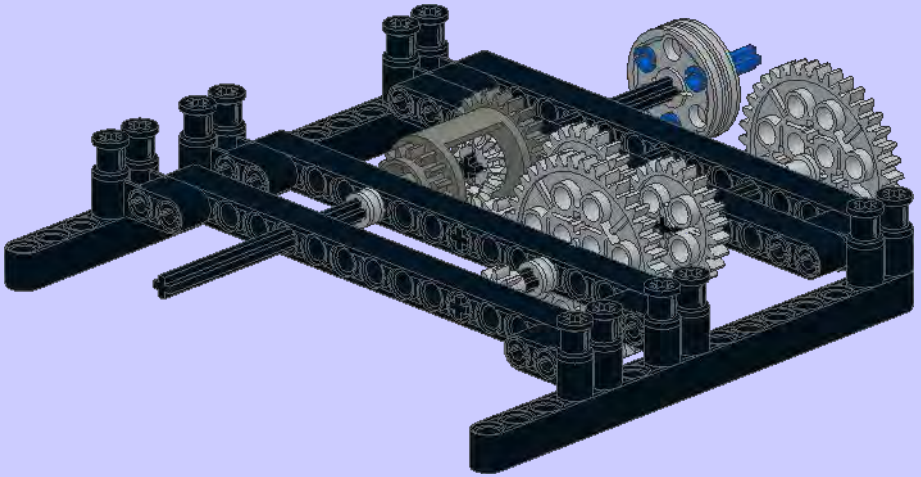

14

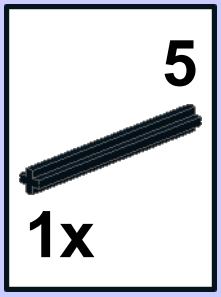


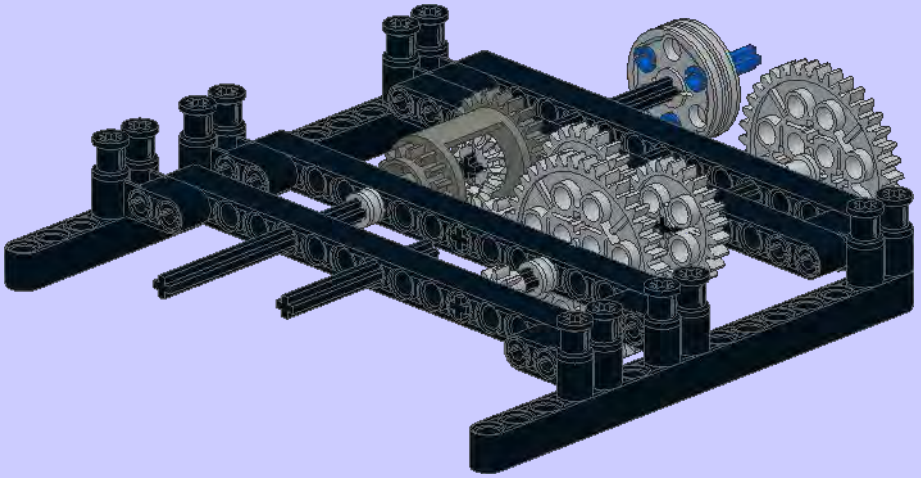

15

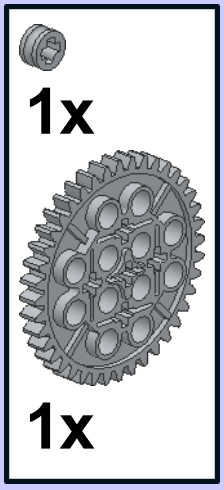


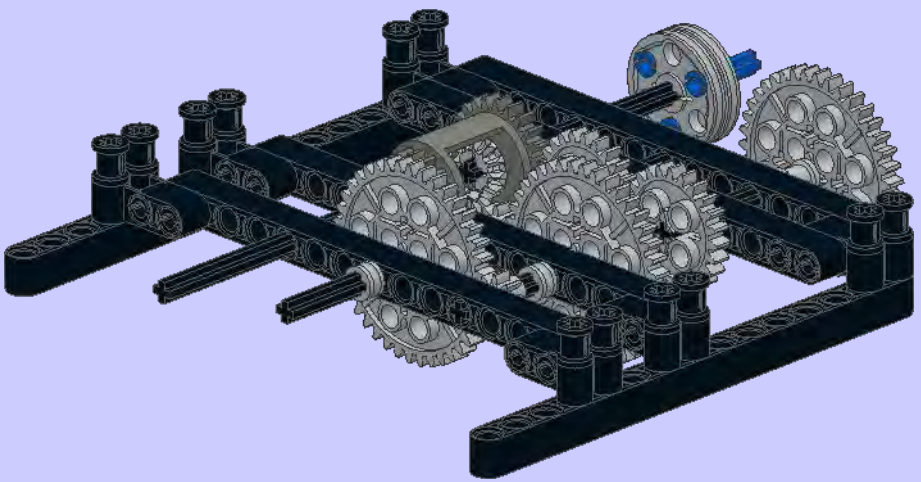

**16**

1x

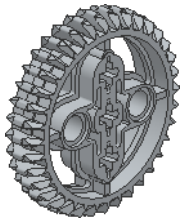

1x

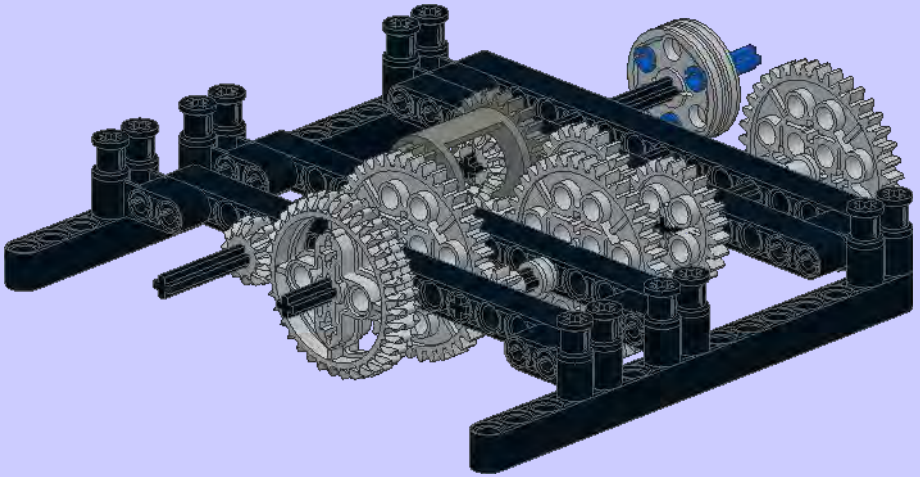

**17**

15

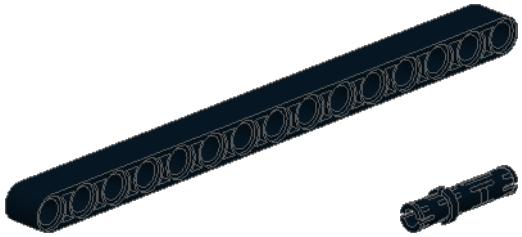



1x 4x

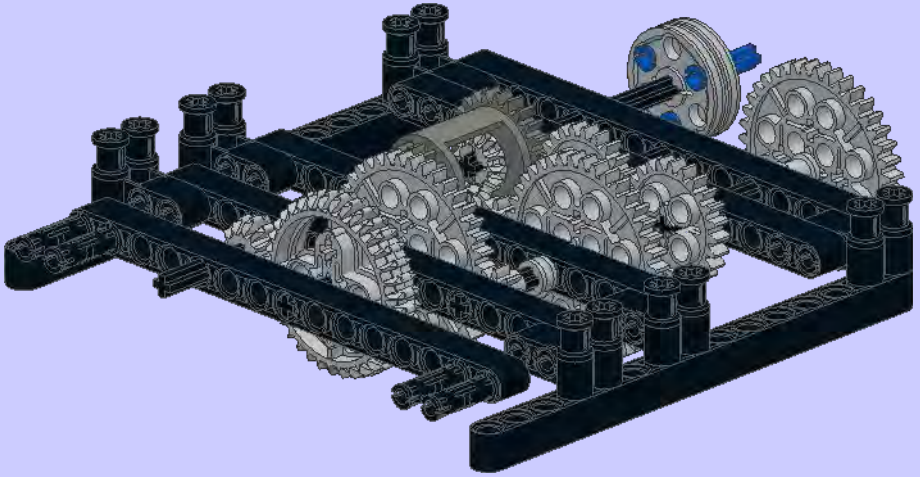

**18**

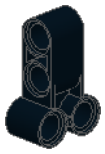

2x

4x

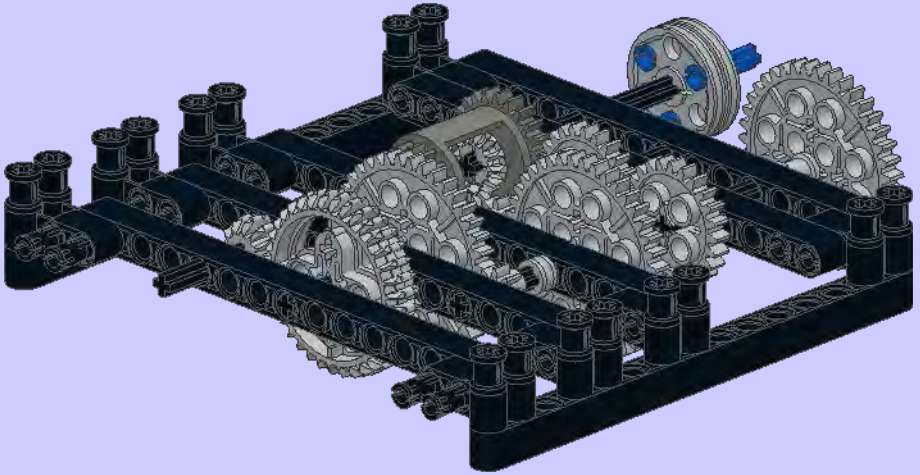

19

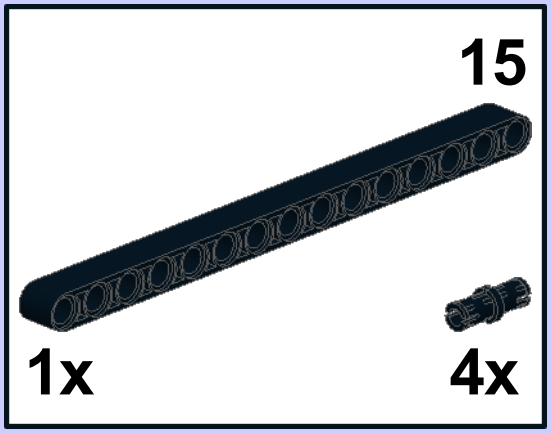


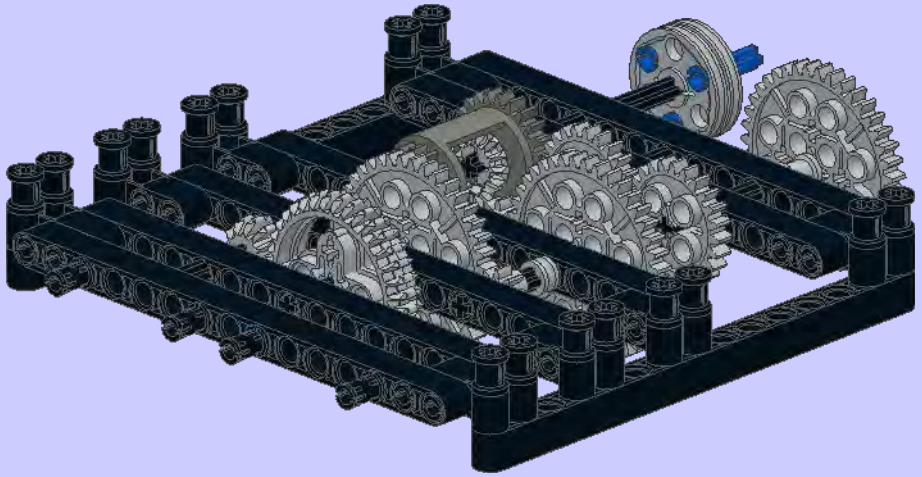

20

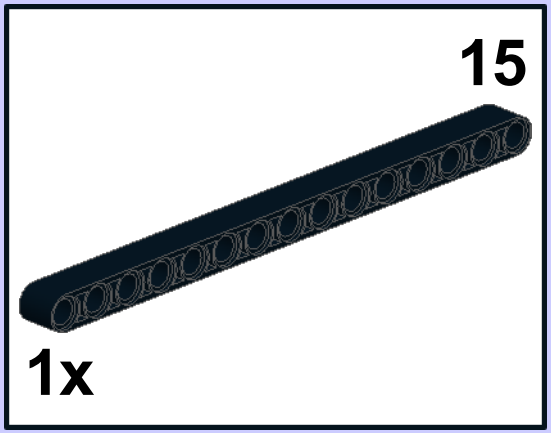


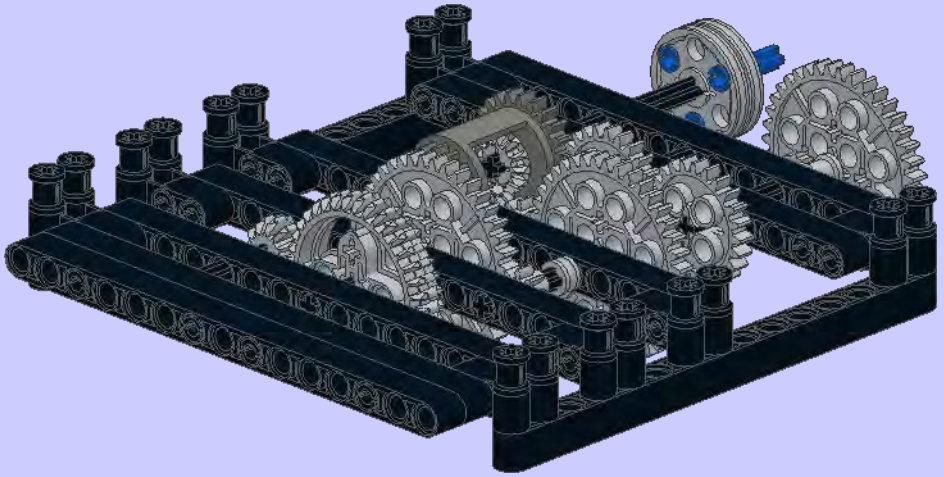

21

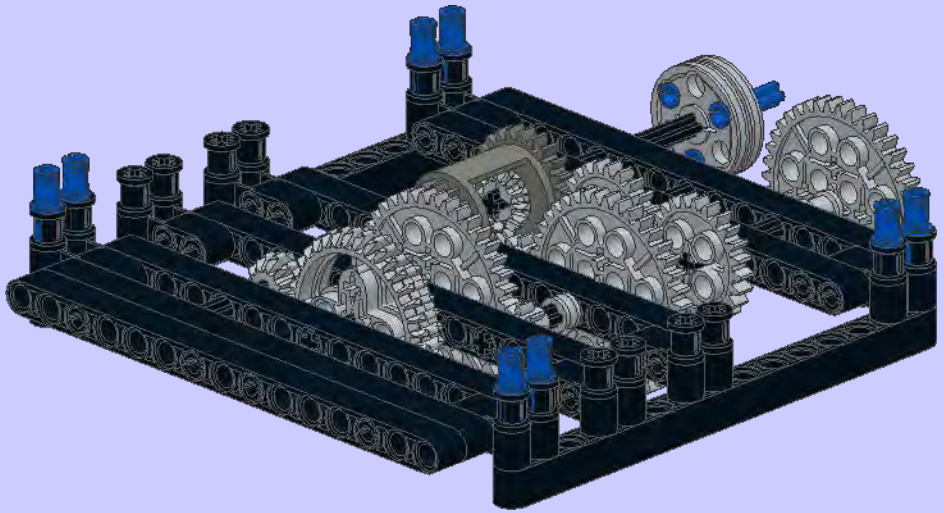

22

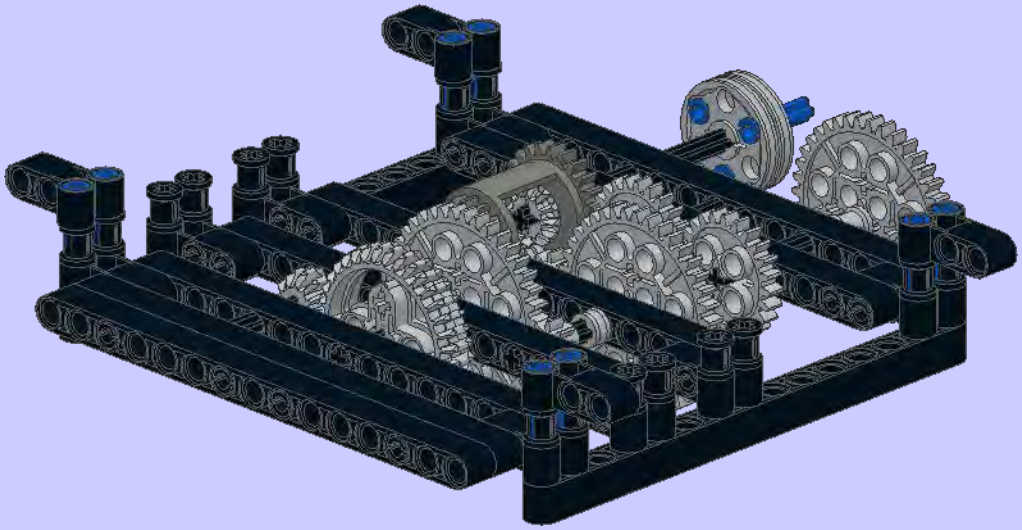

1

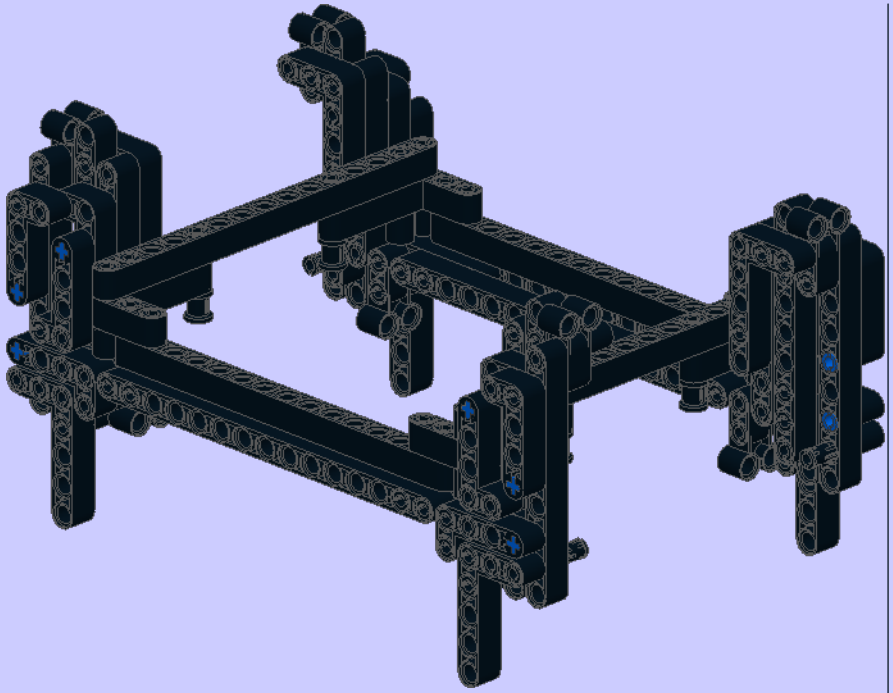

2

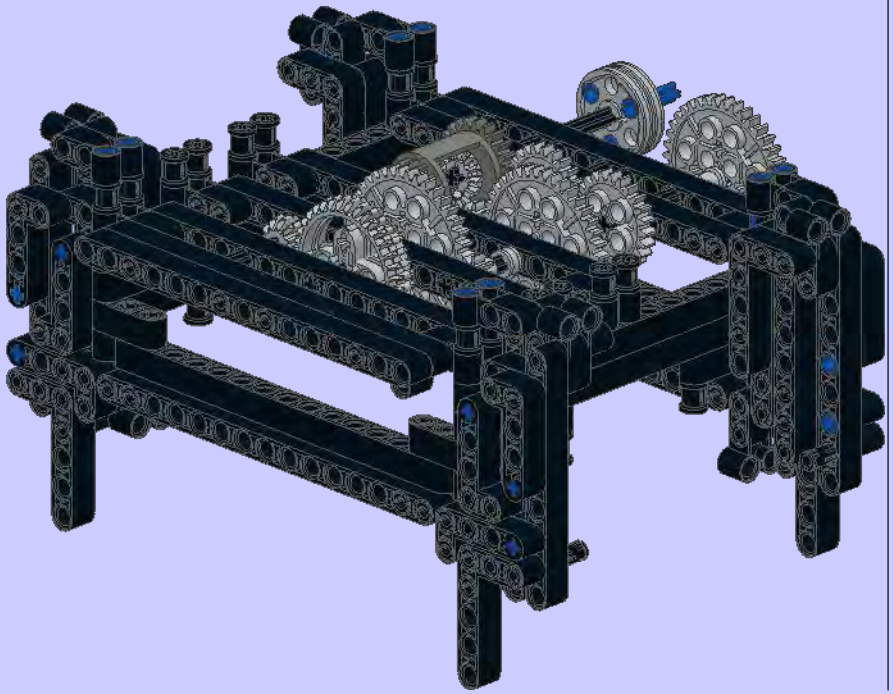

3

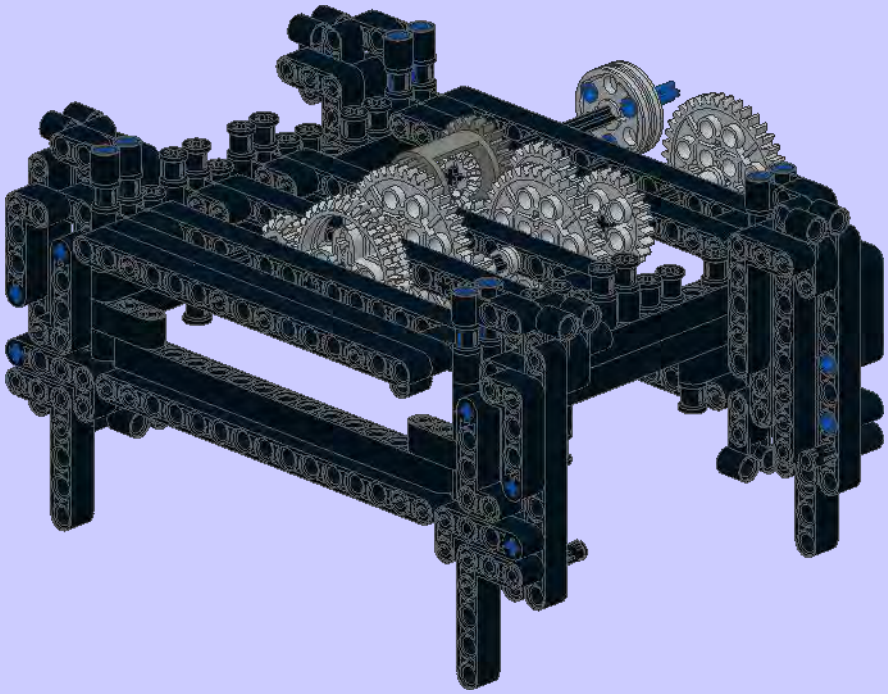

4

4x

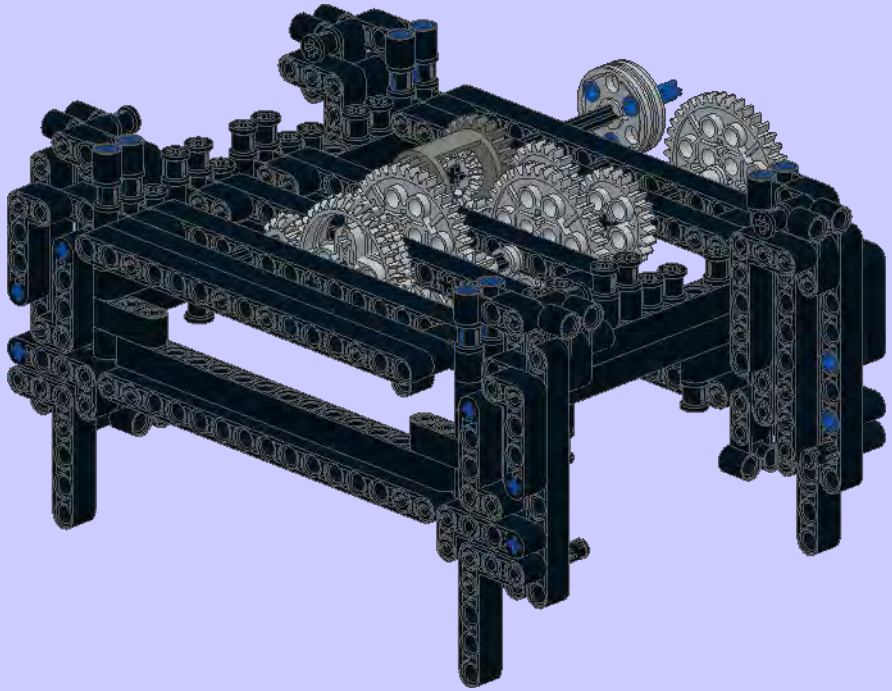

5

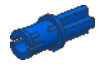

2x

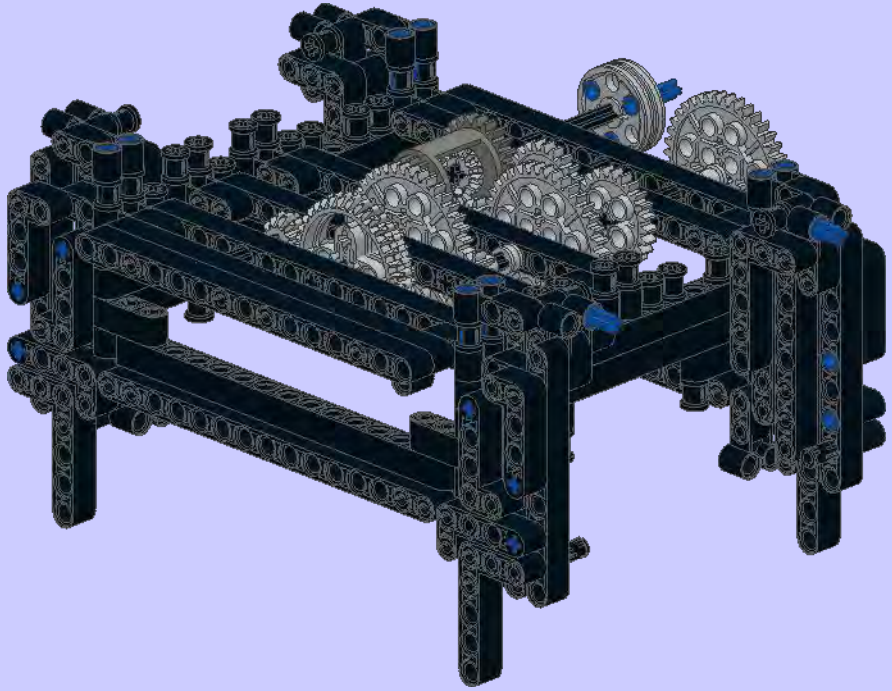

6

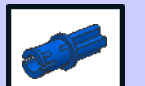

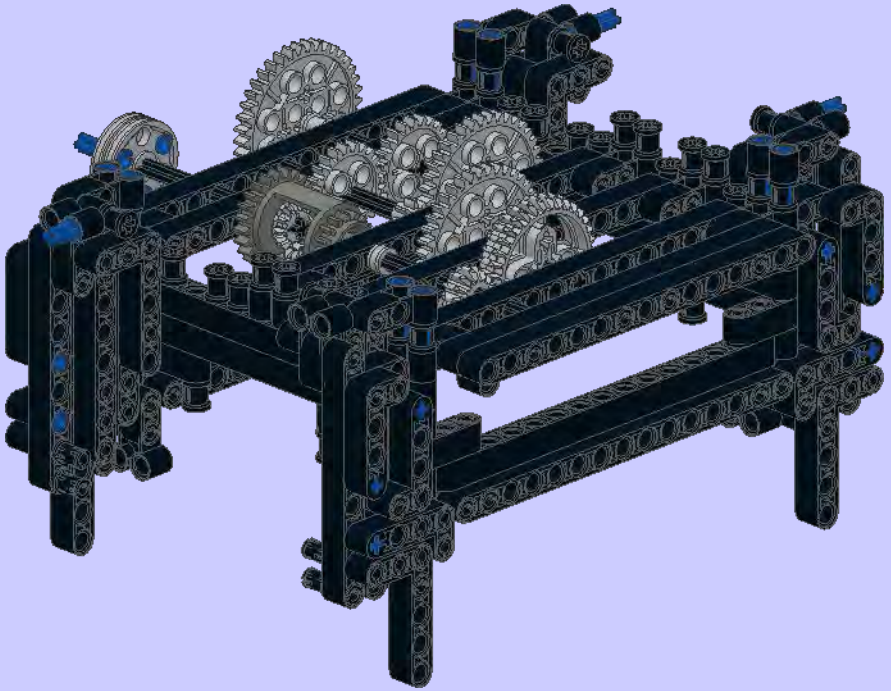

7

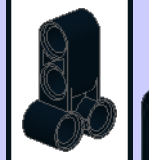


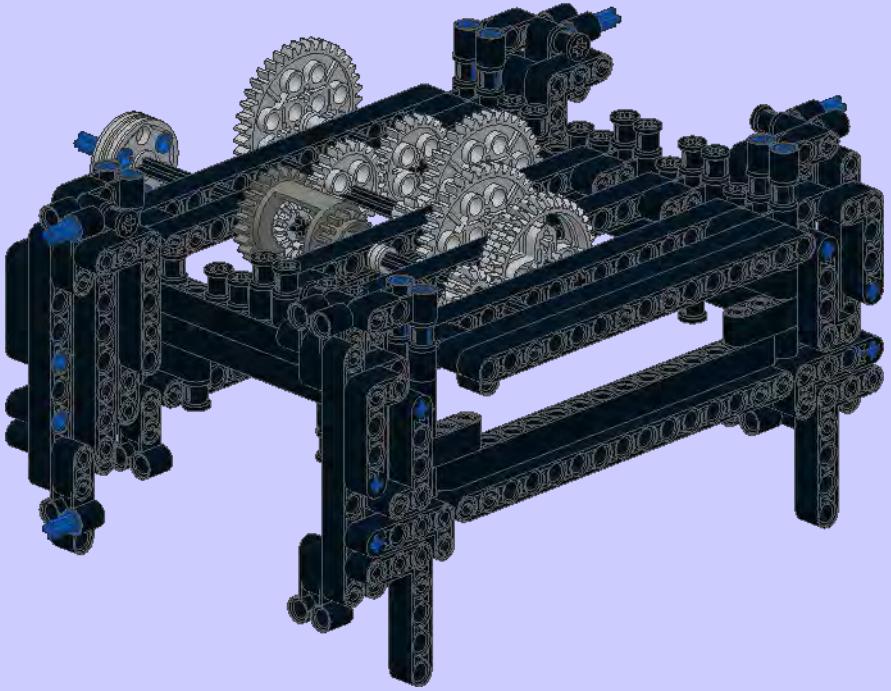

8

4x

3

2x

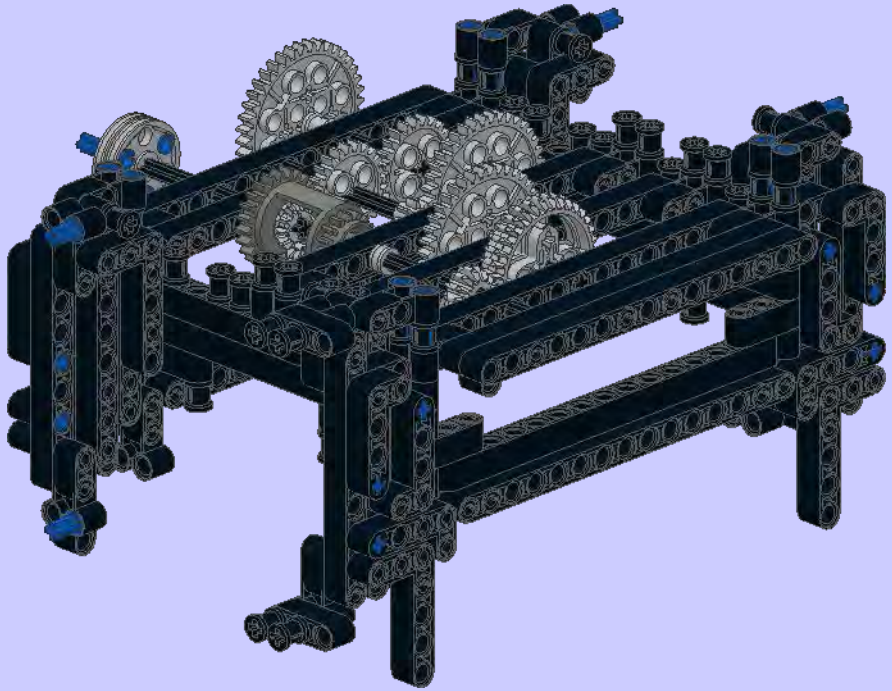

9

8x

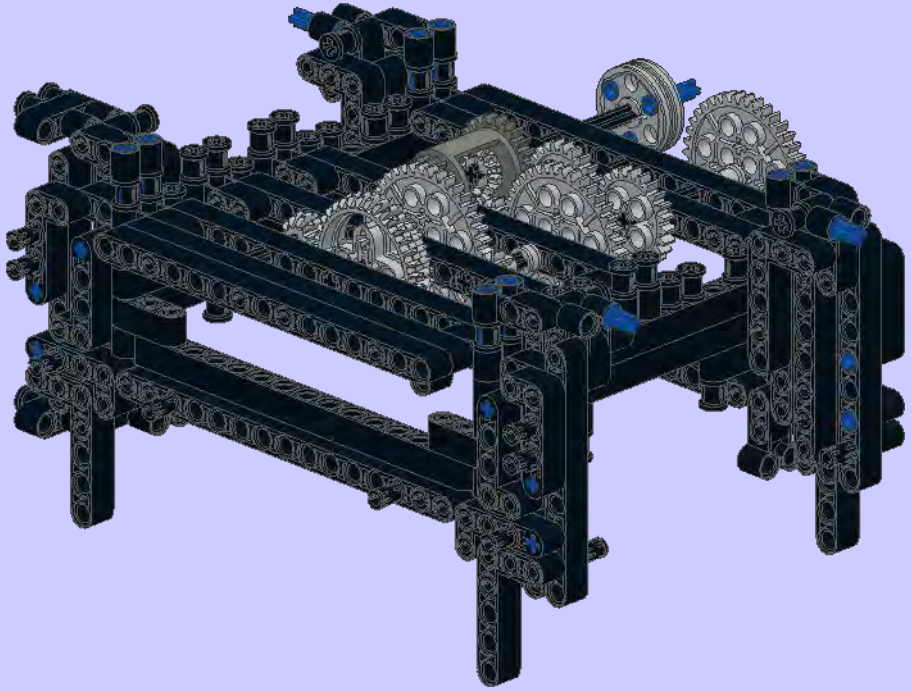

10

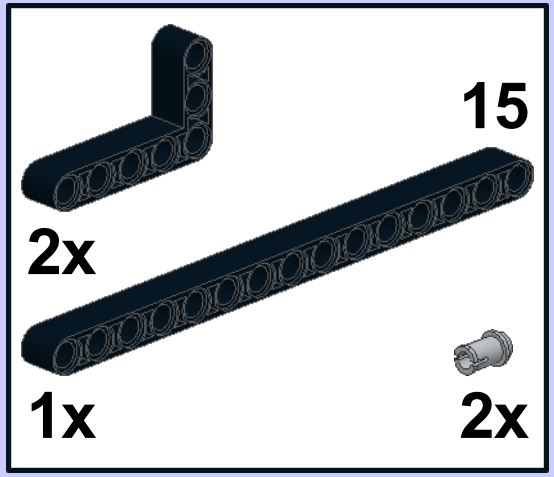


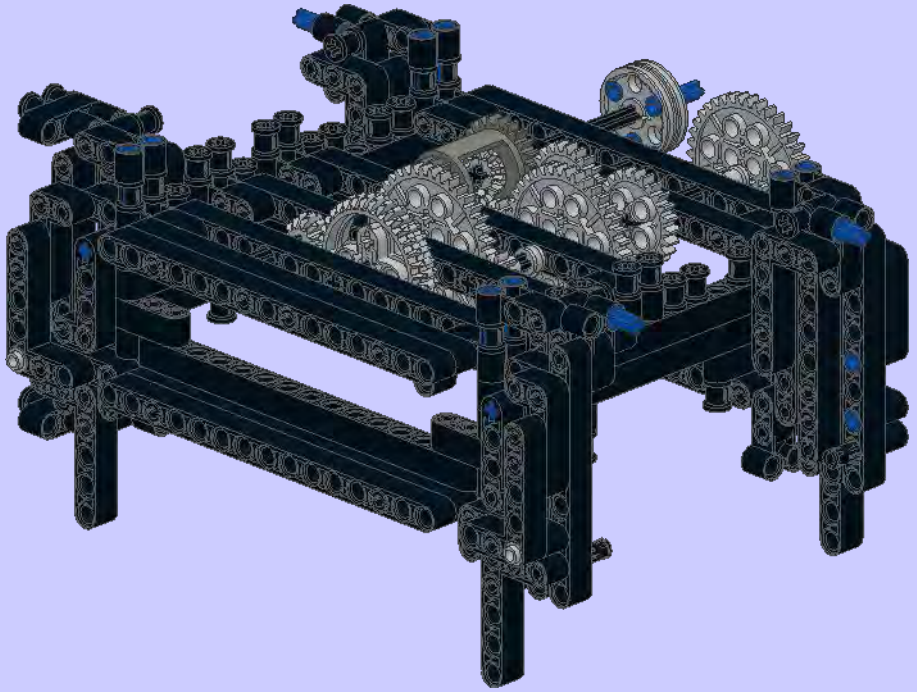

11

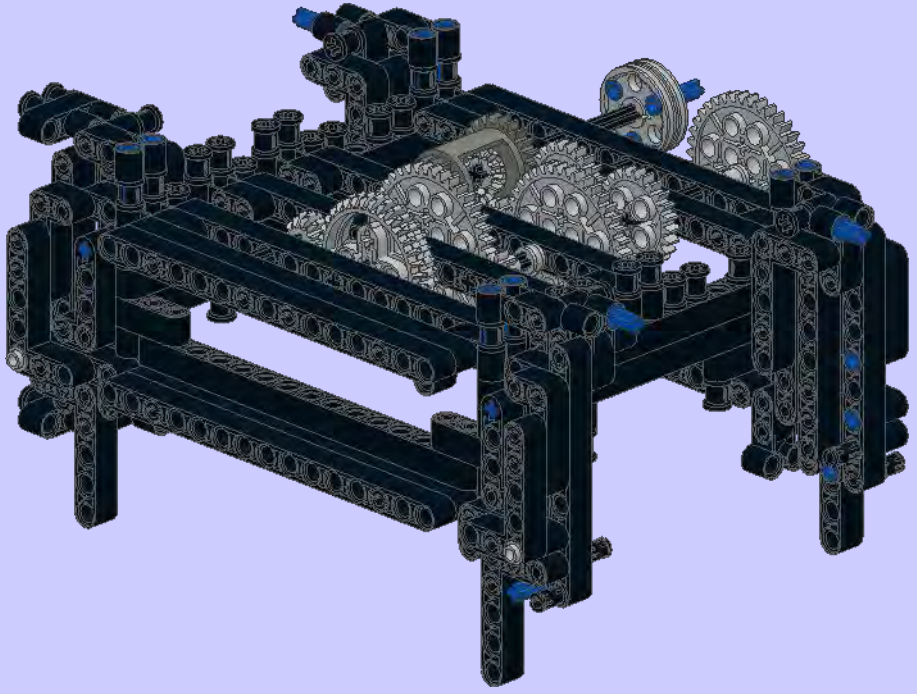

12

2x

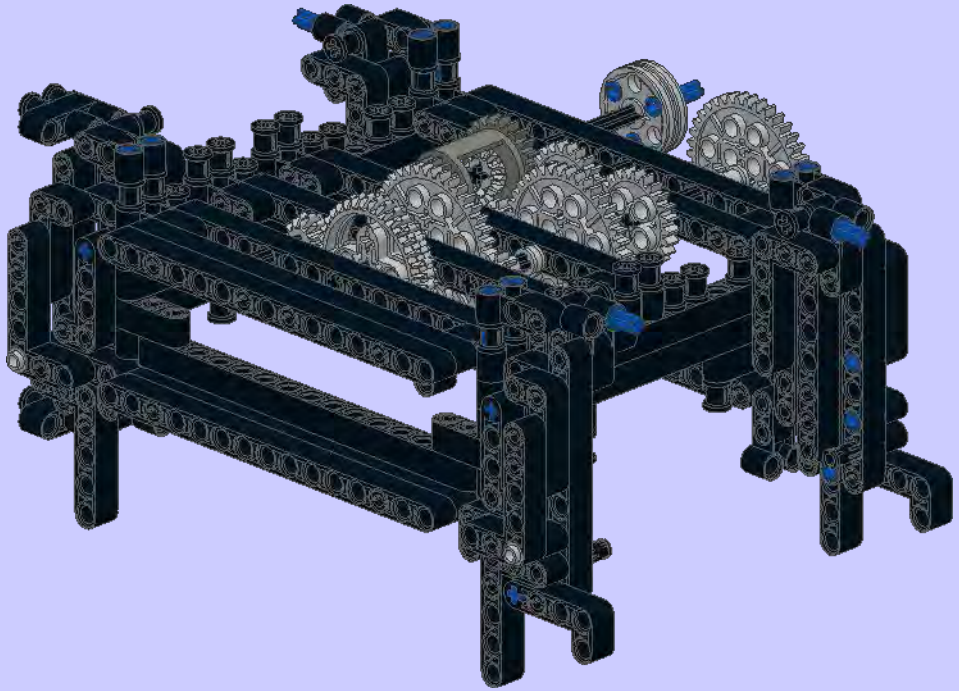

13

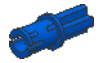

2x

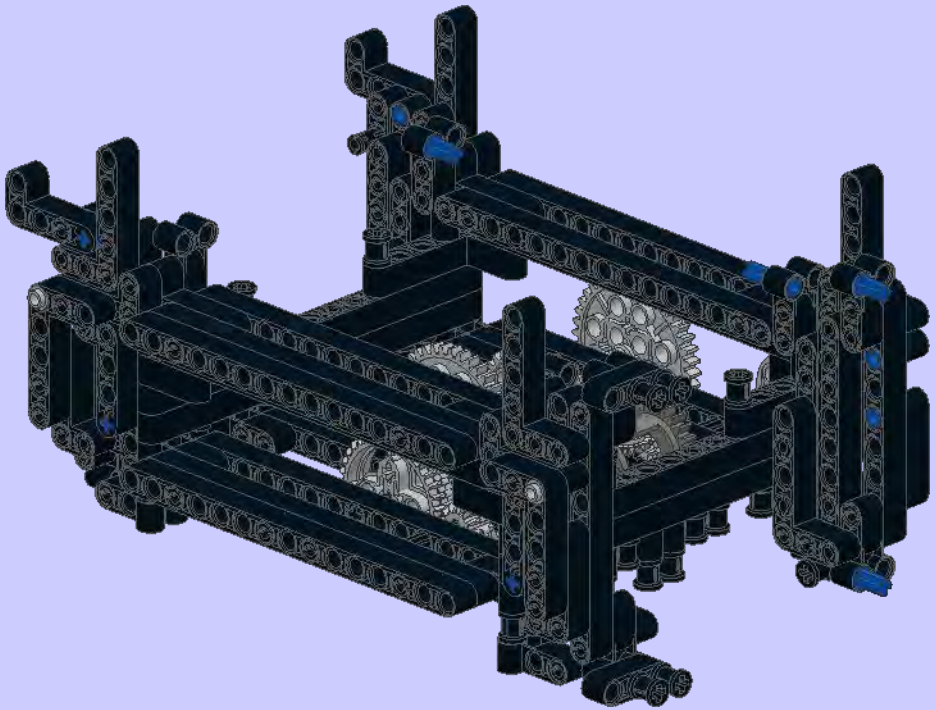

1

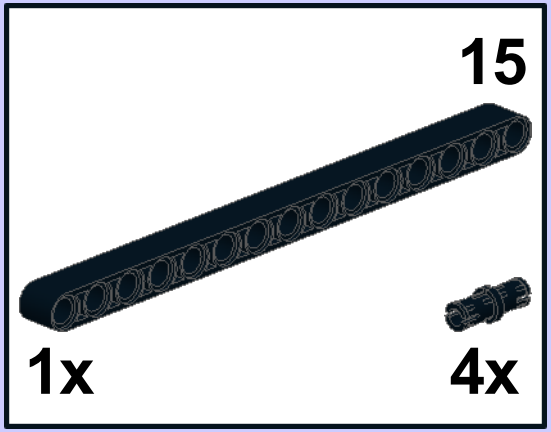


2

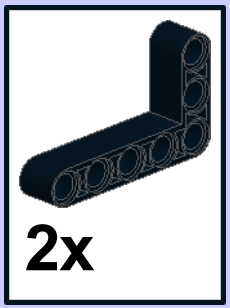


3

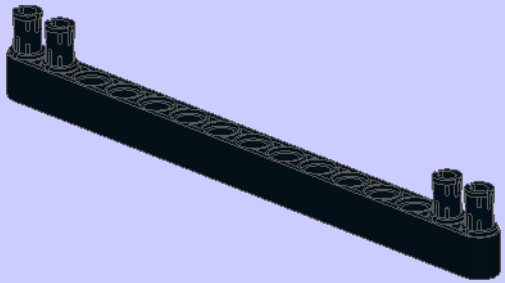

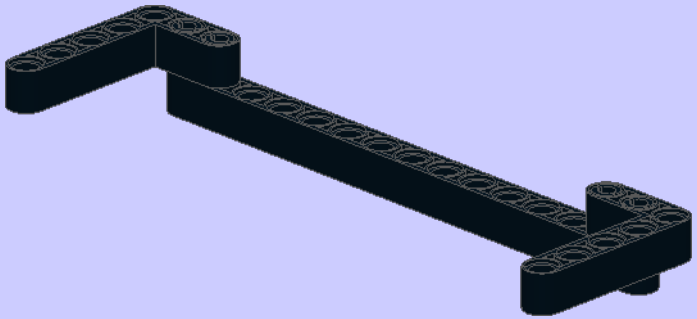

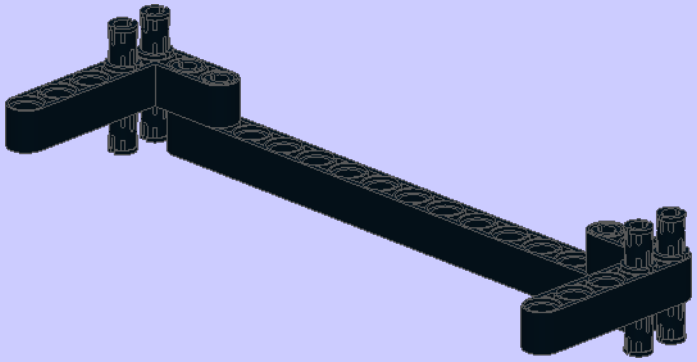

**4**

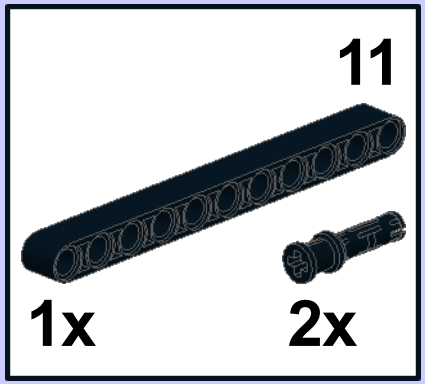


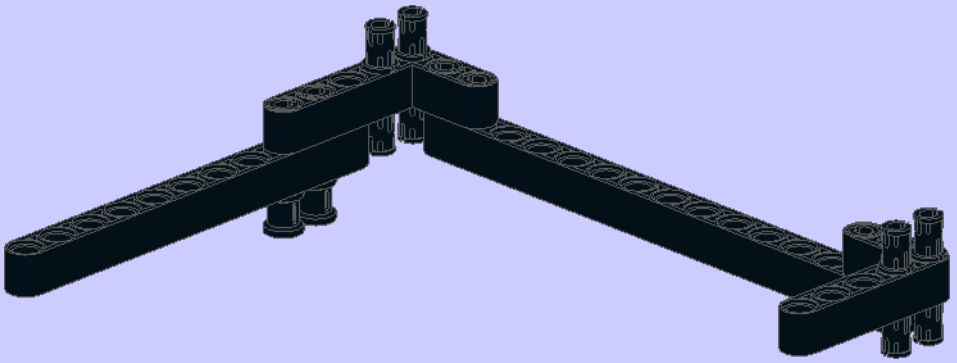

**5**

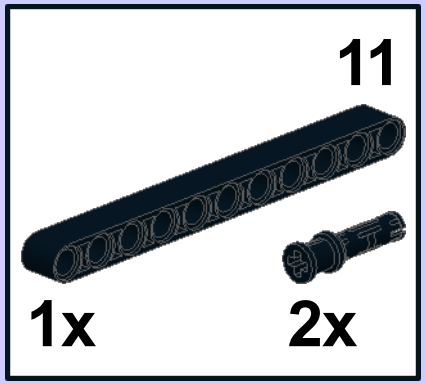


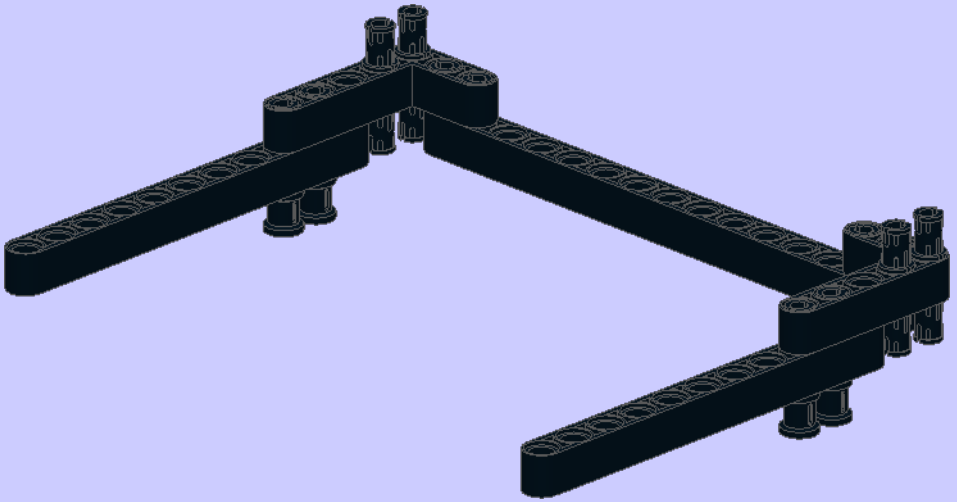

**6**

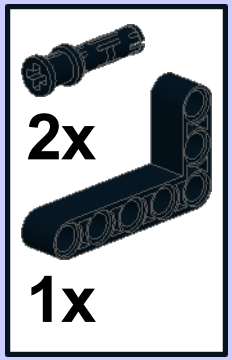


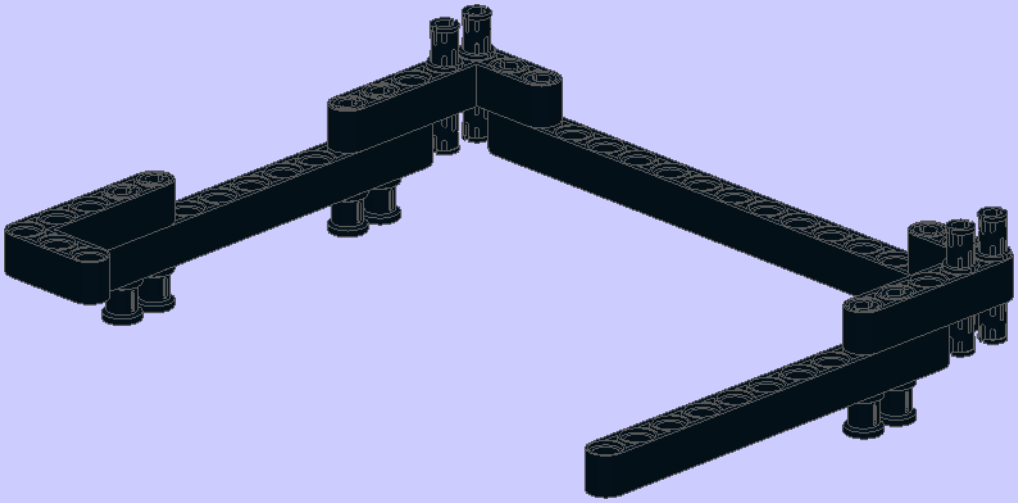

7

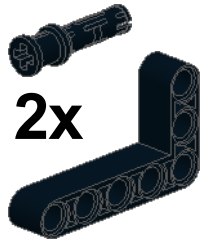


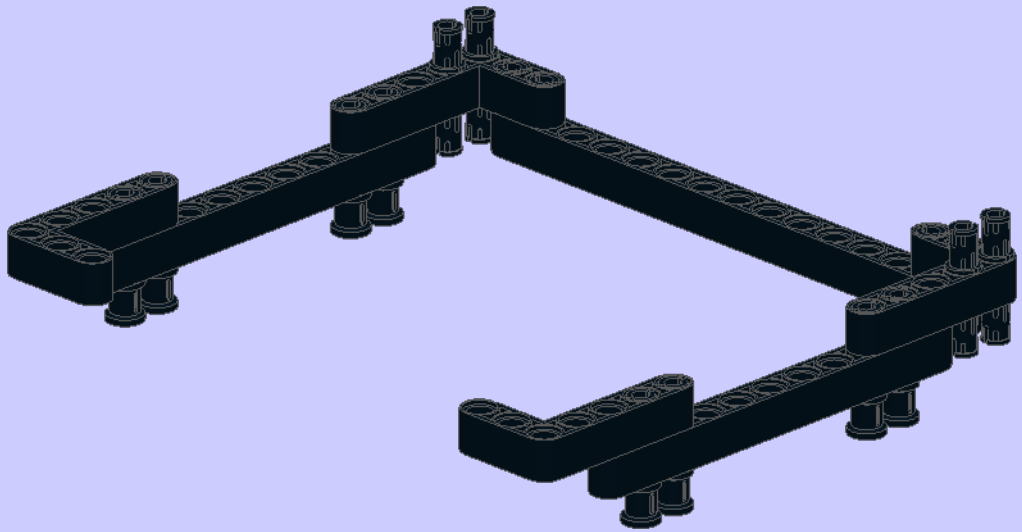

8

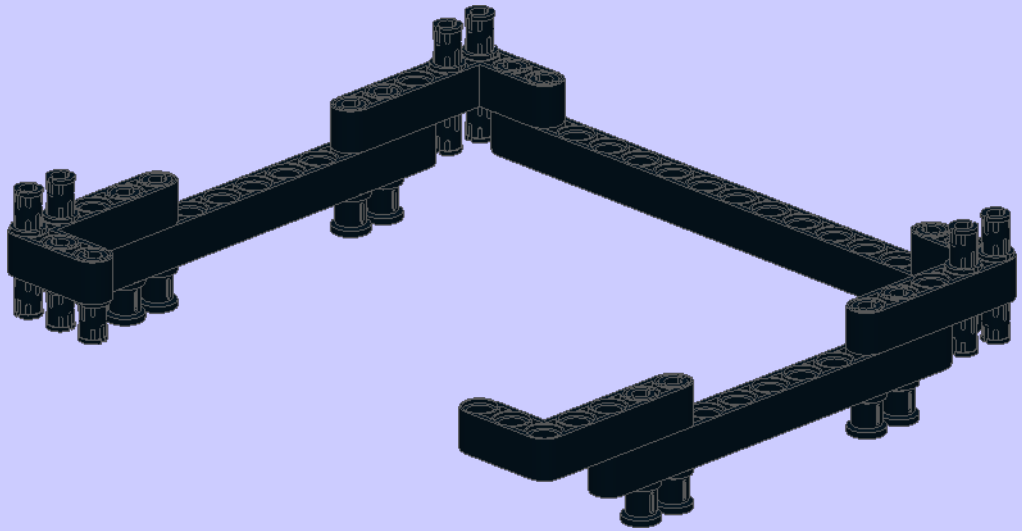

9

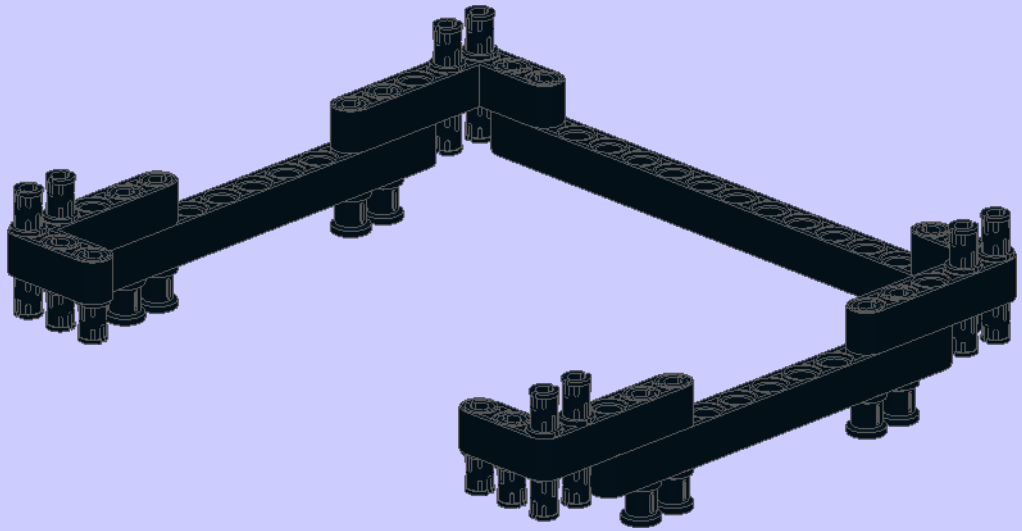

10

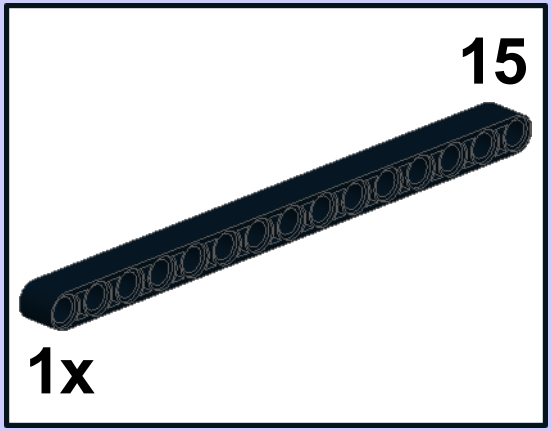


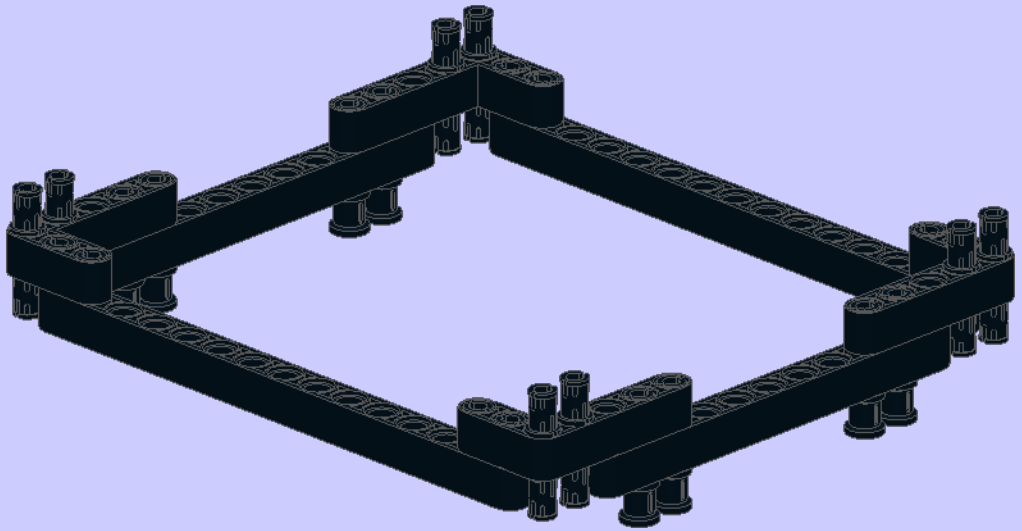

11

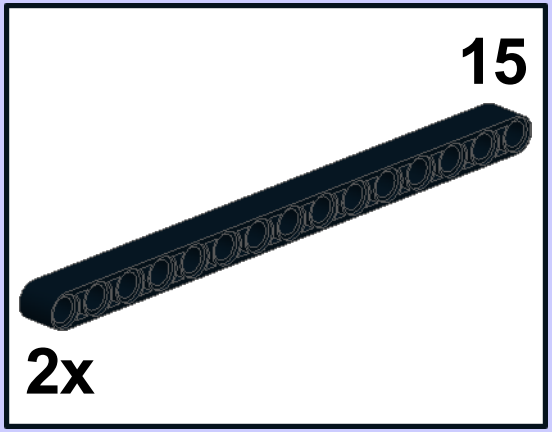


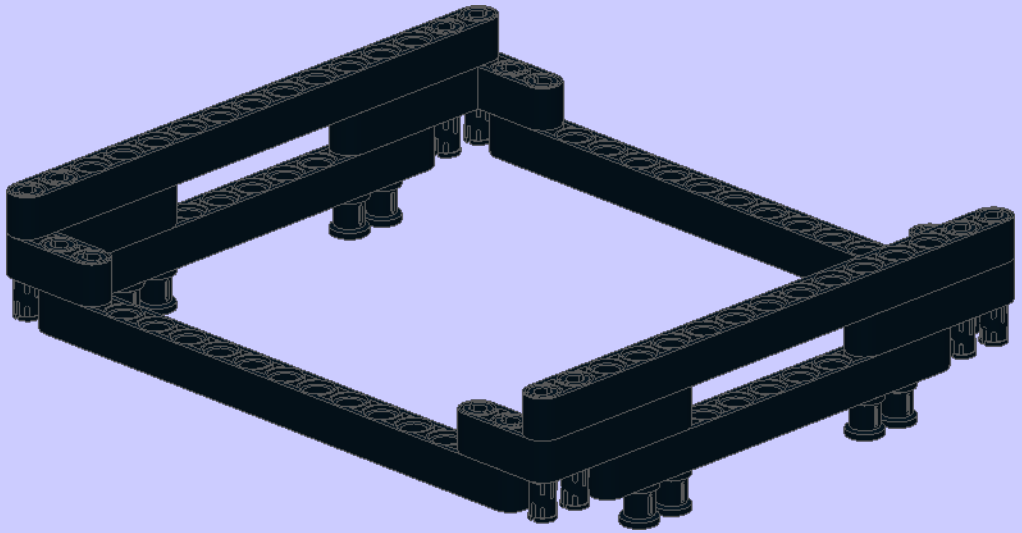

1

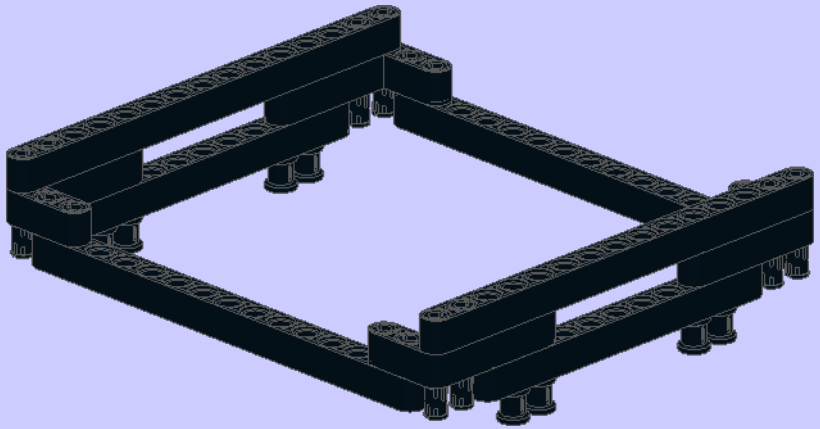

2

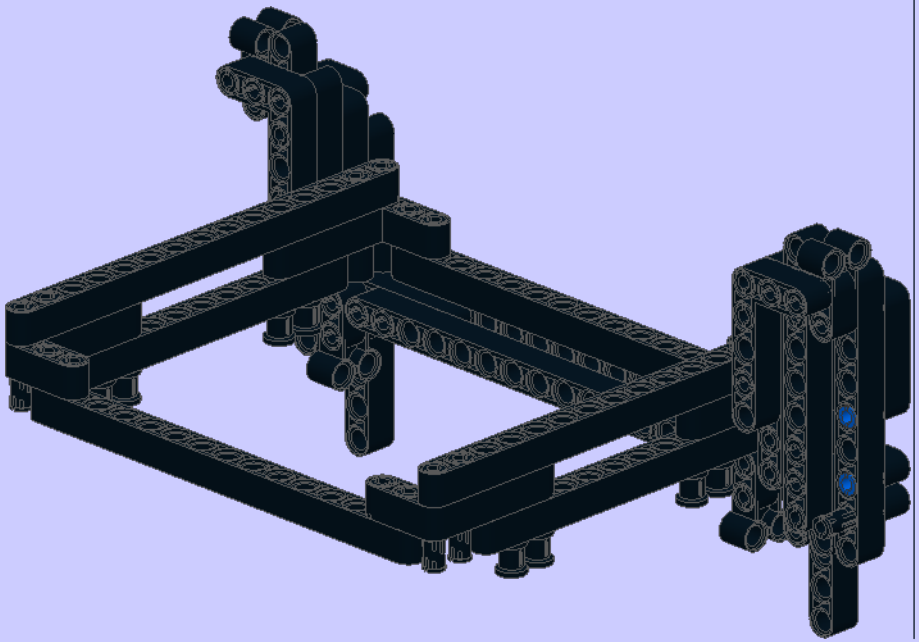

3

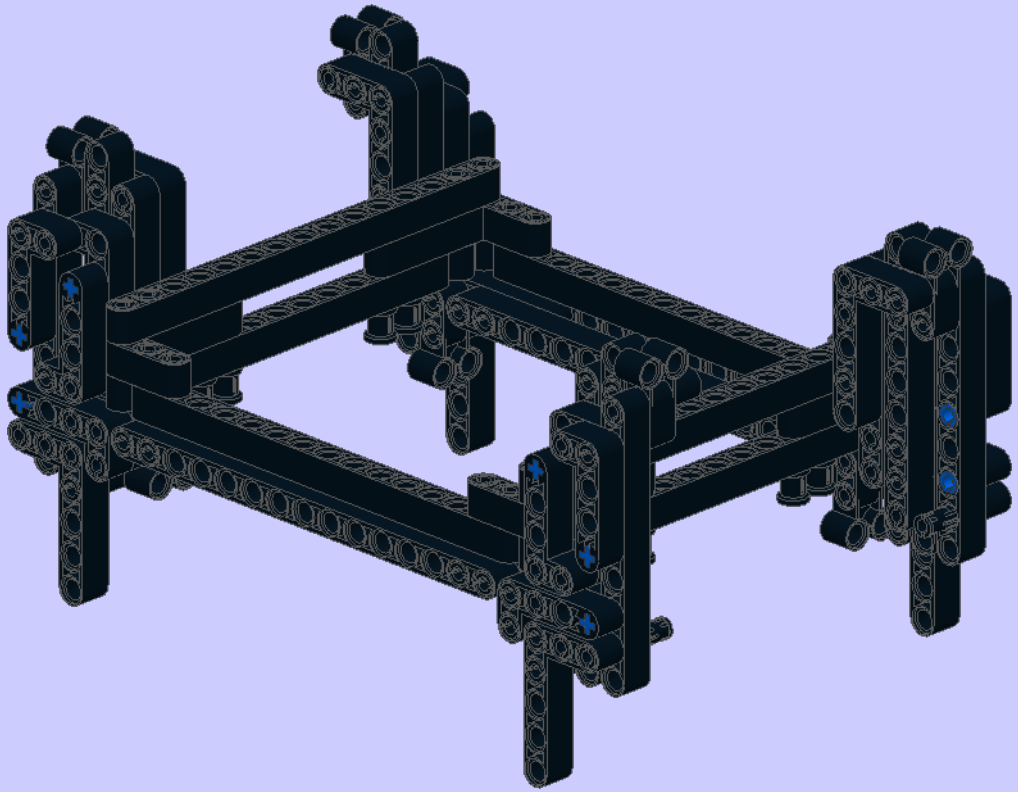

x3

1

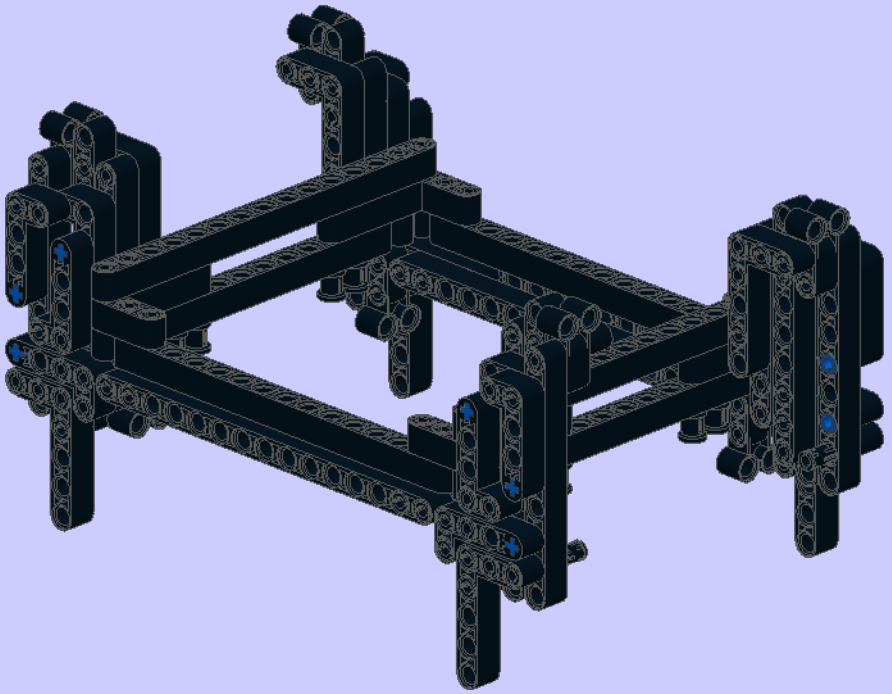

2

2x 6

1x 10

1x 12

1x

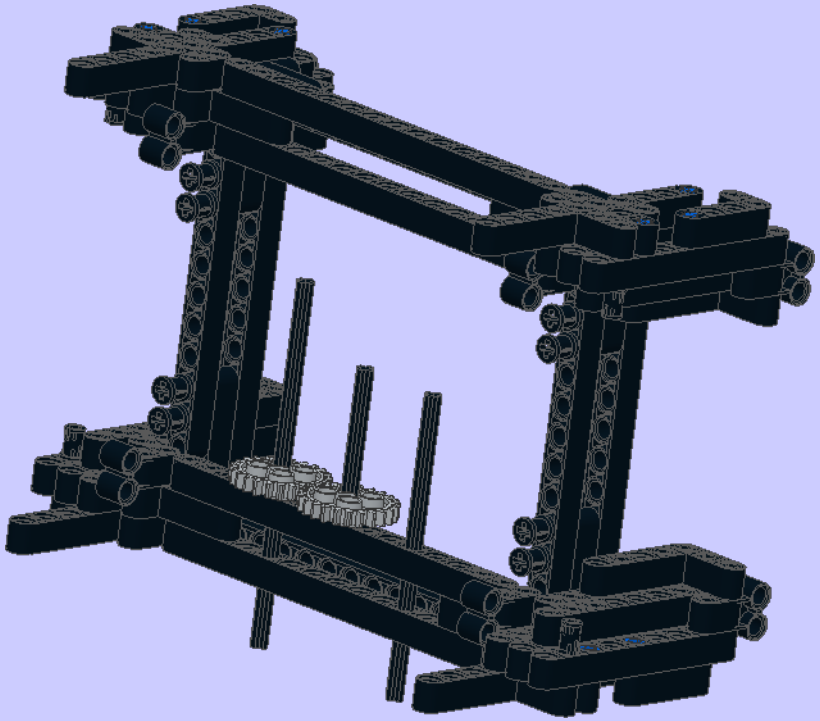

3

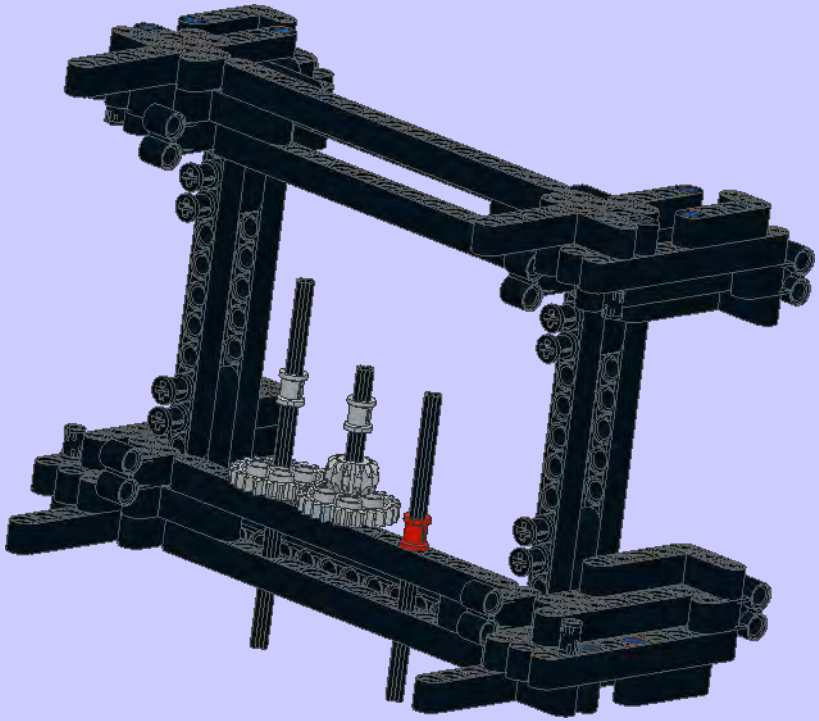

4

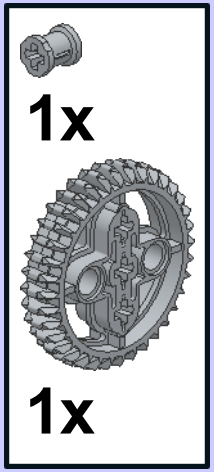


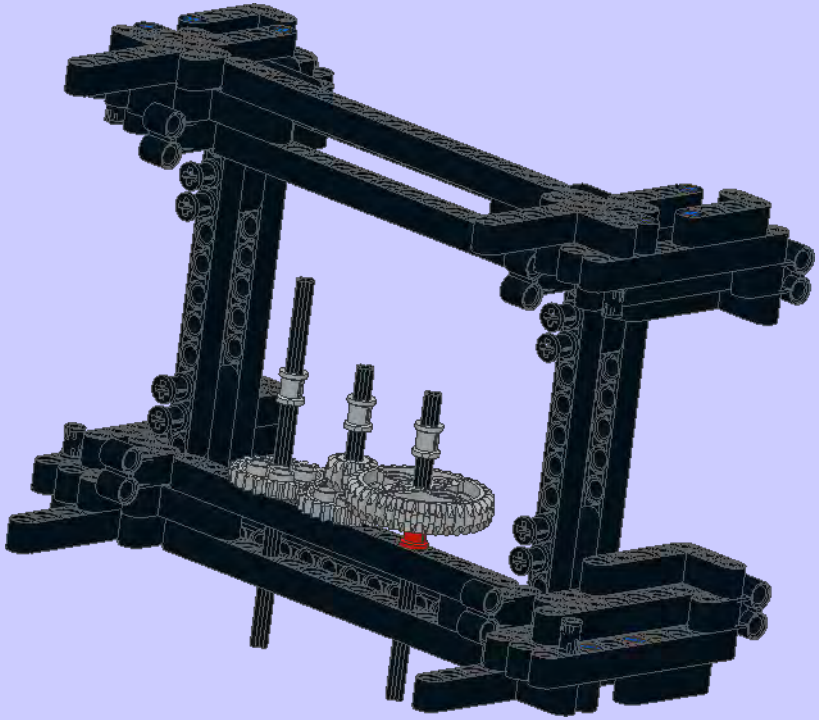

**5**

4x

2x

4x

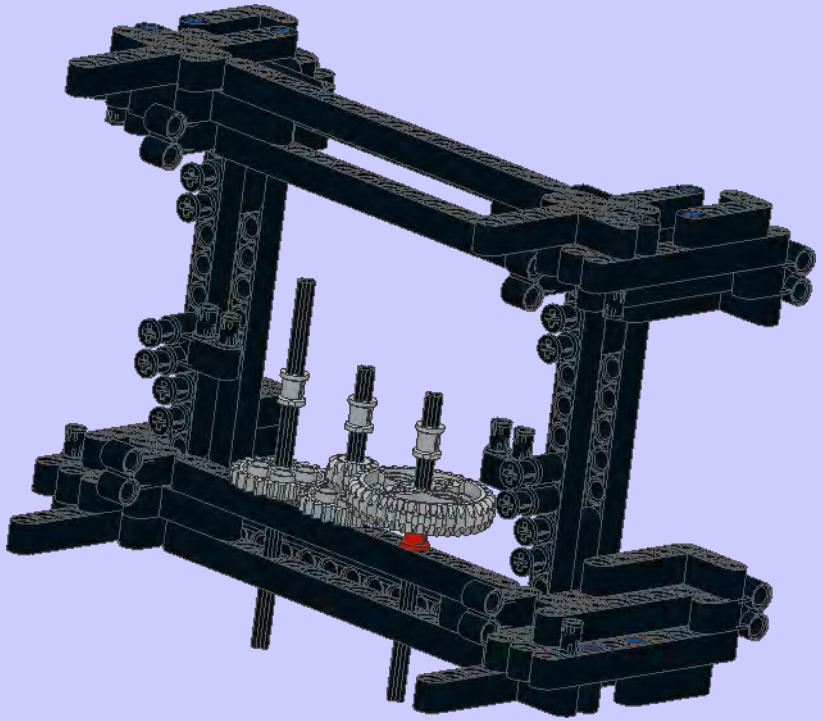

**6**

15

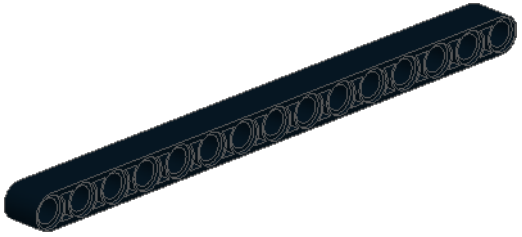
1x

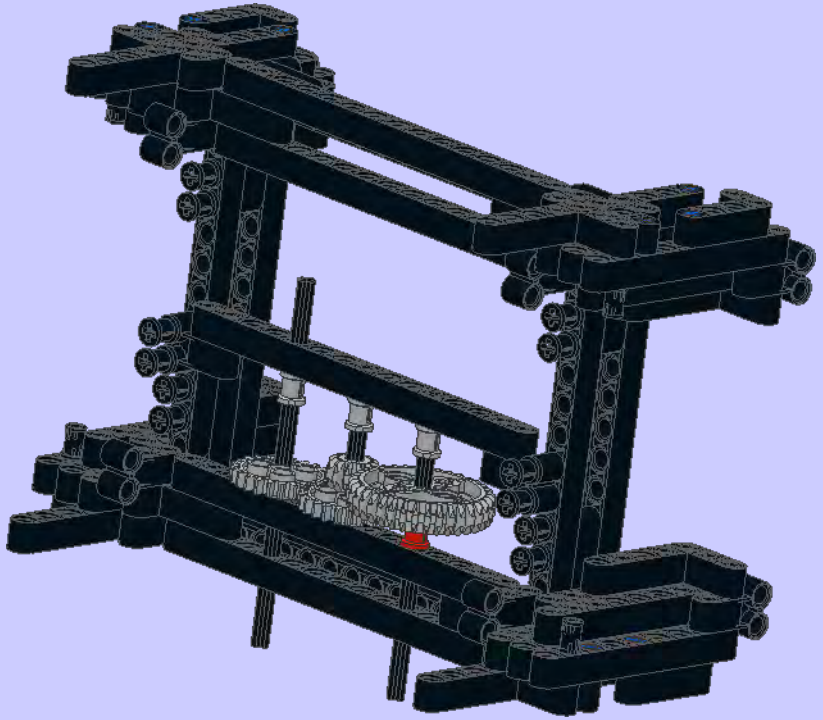

7

1x

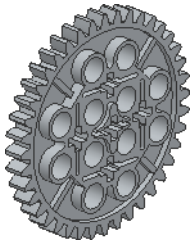

1x

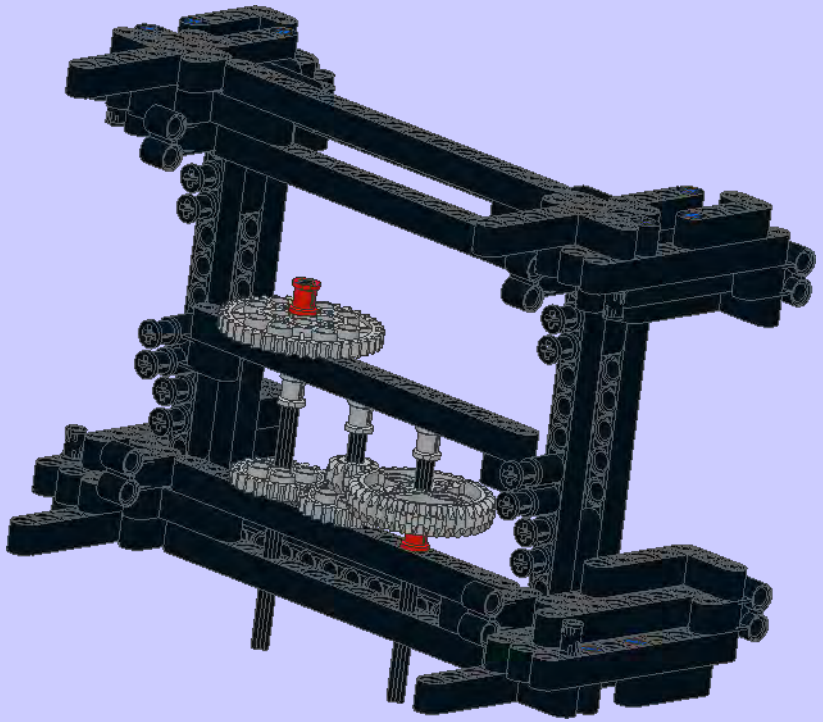

8

15

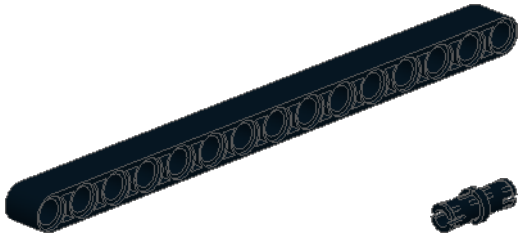



1x

3x

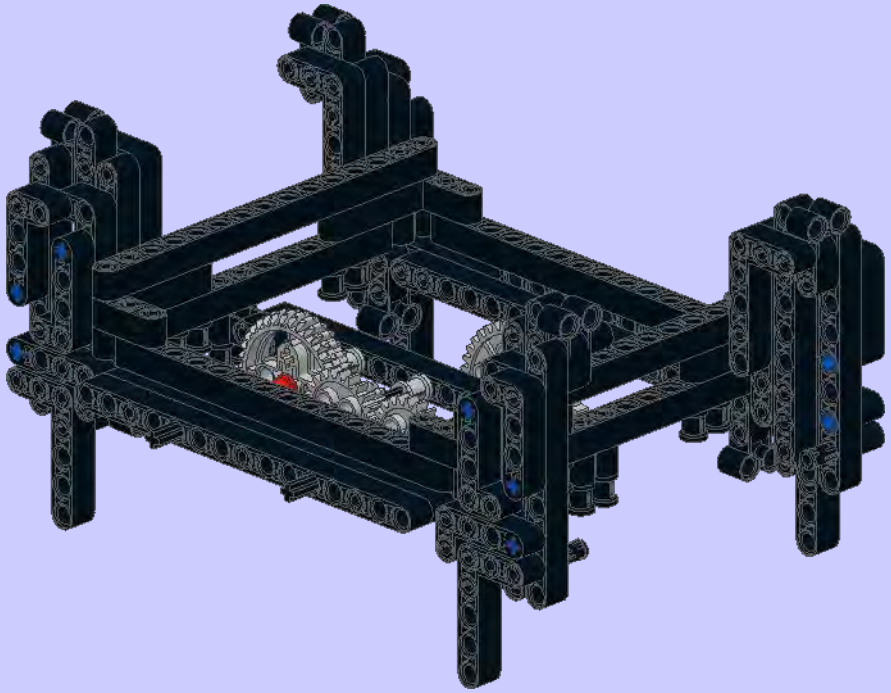

9

6x

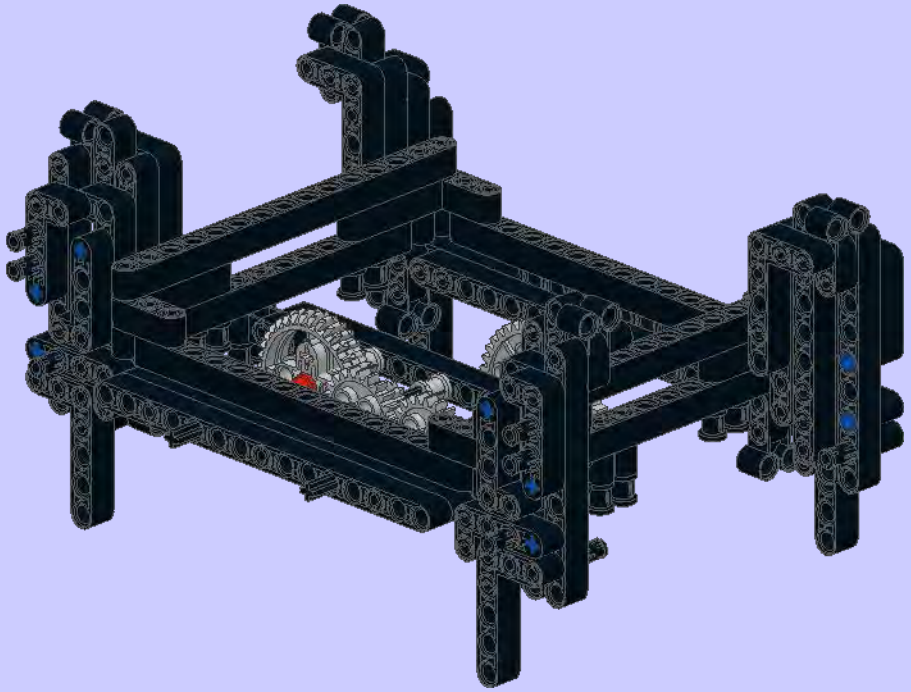

10

2x

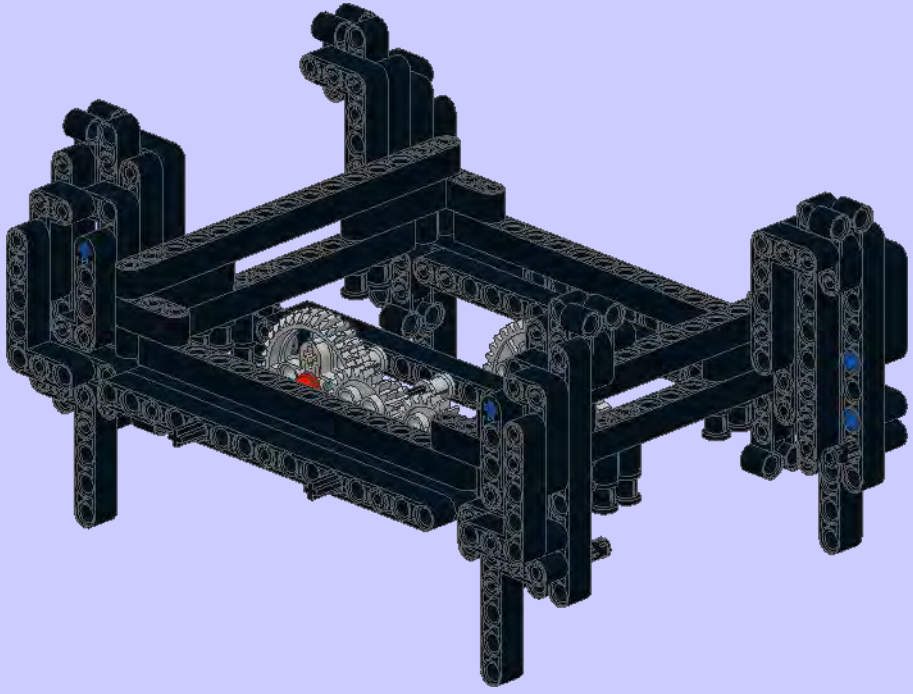

11

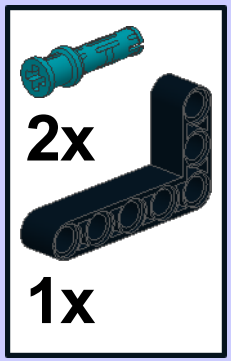


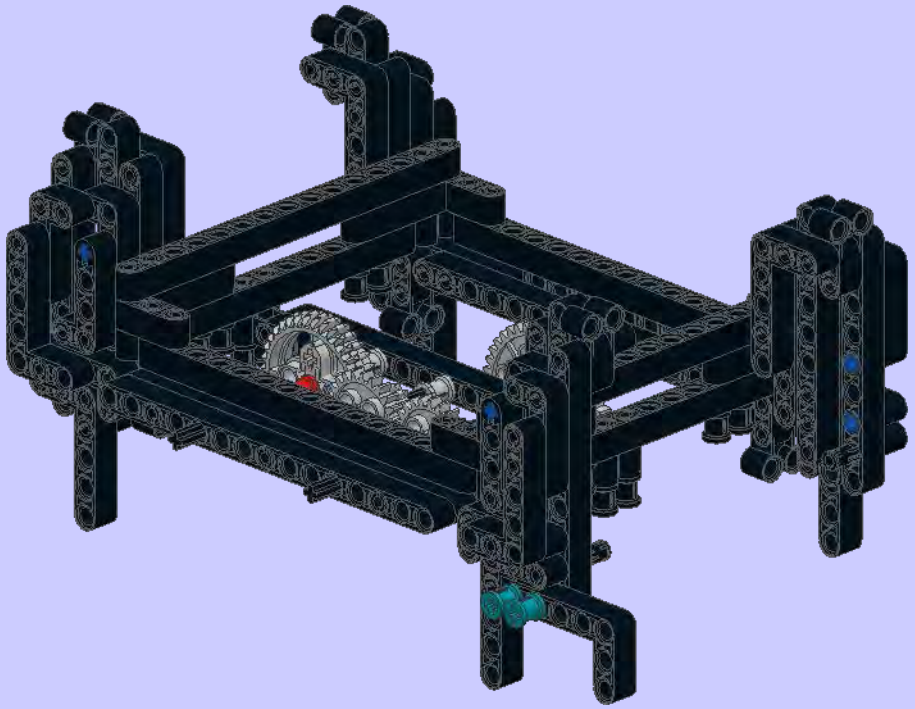

12

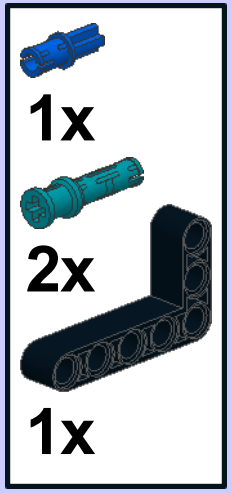


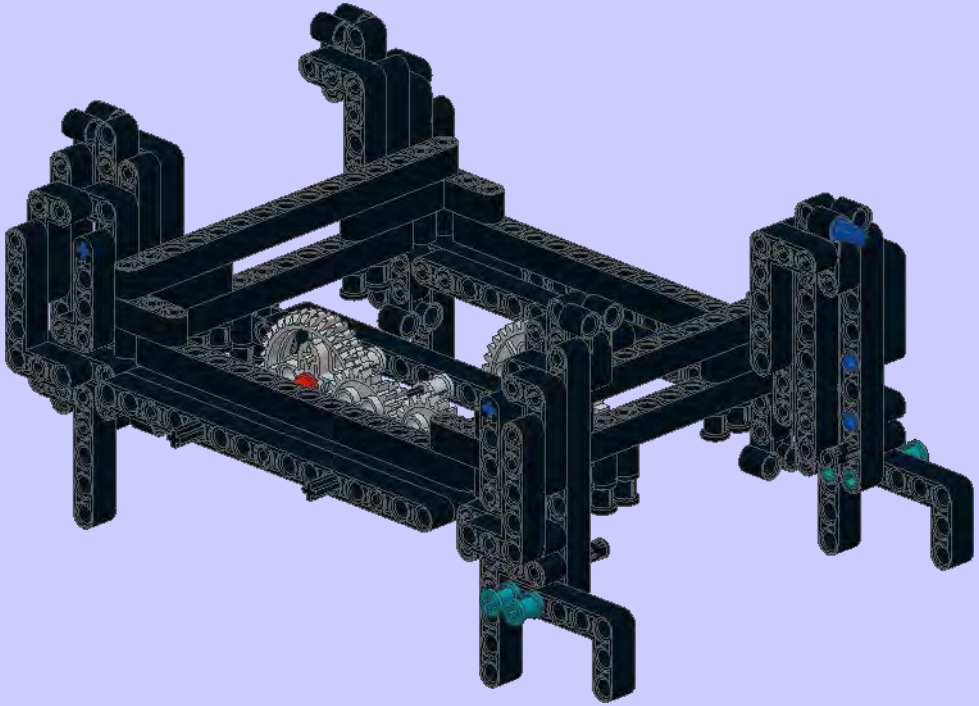

1

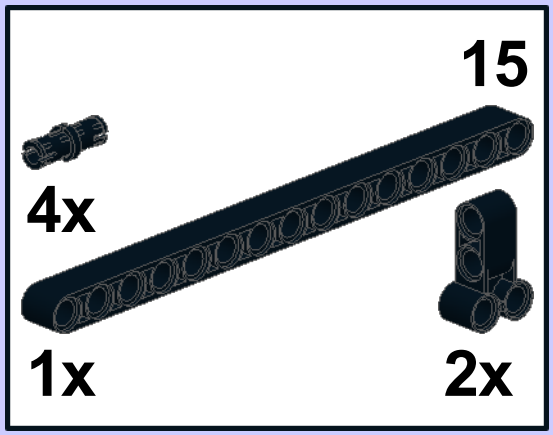


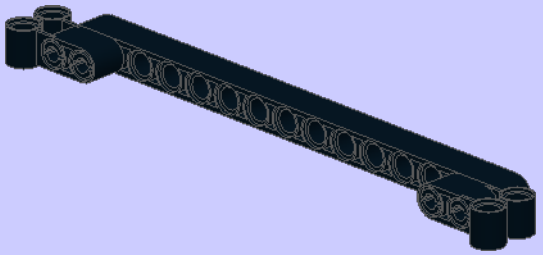

2

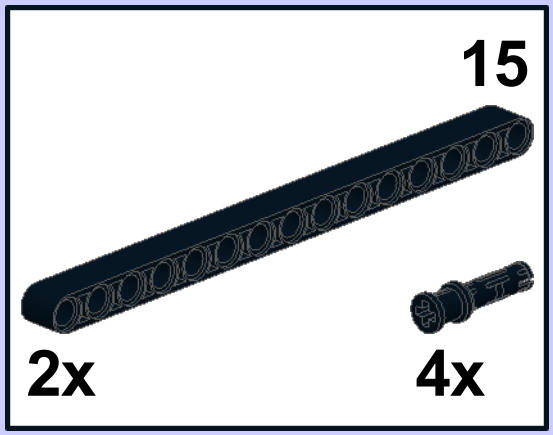


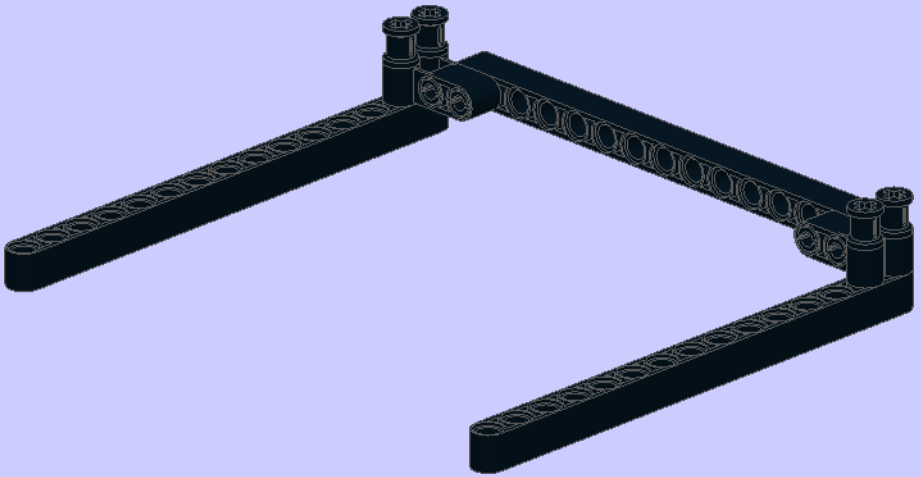

3

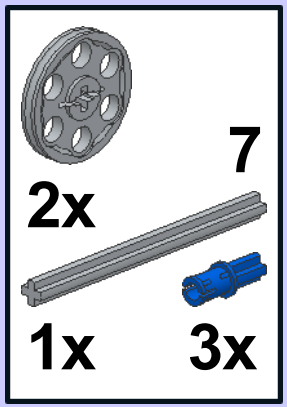


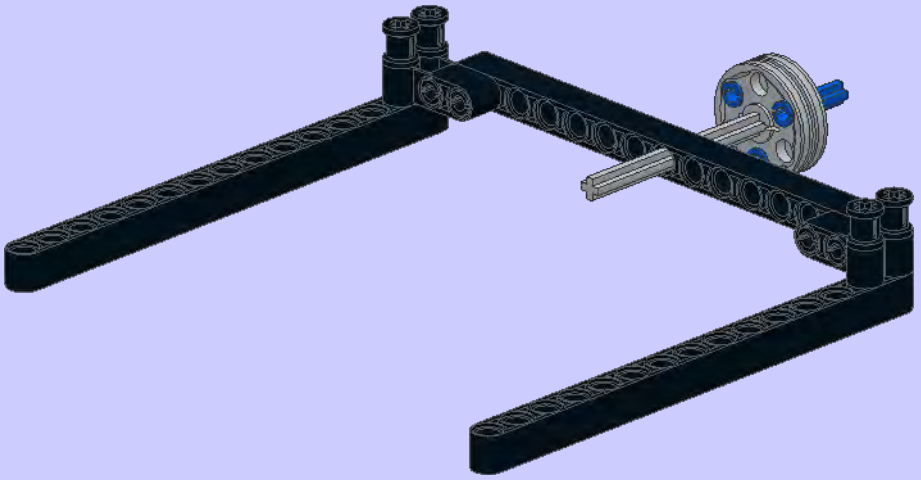

**4**

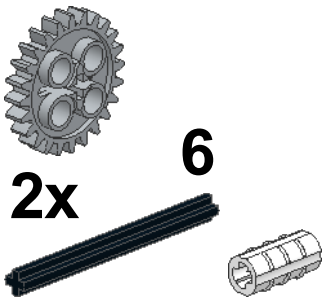


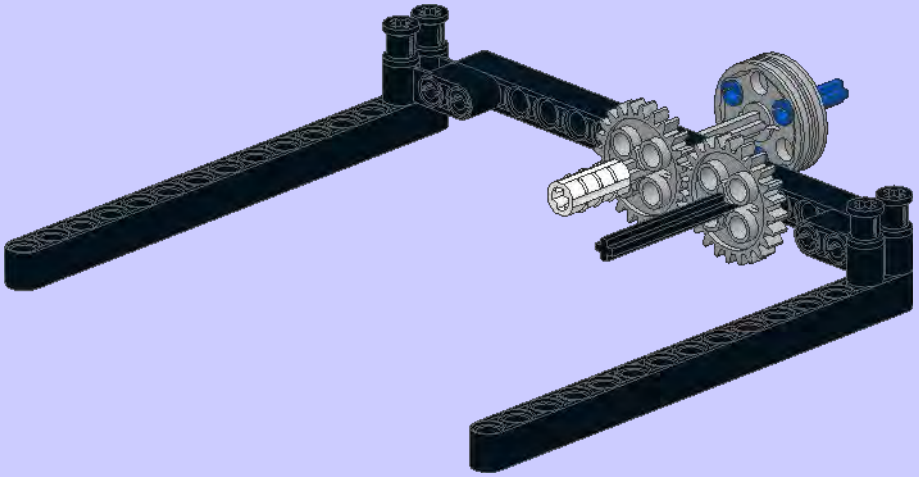

**5**

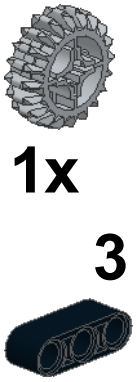


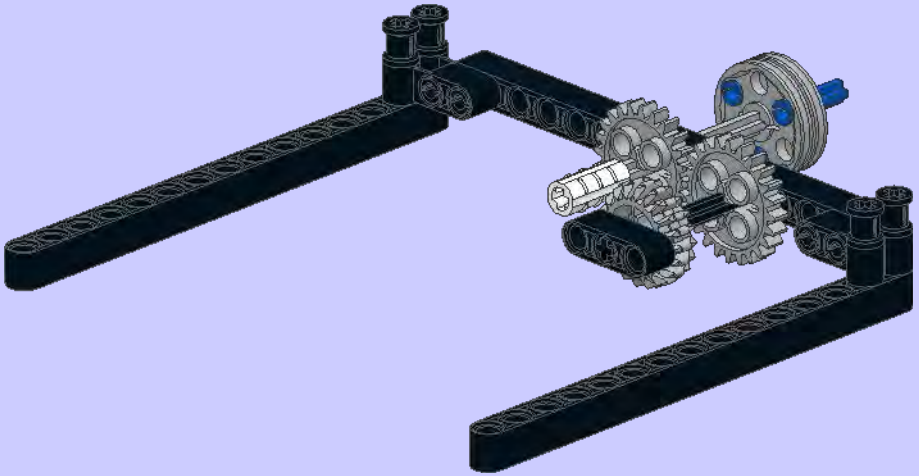

**6**

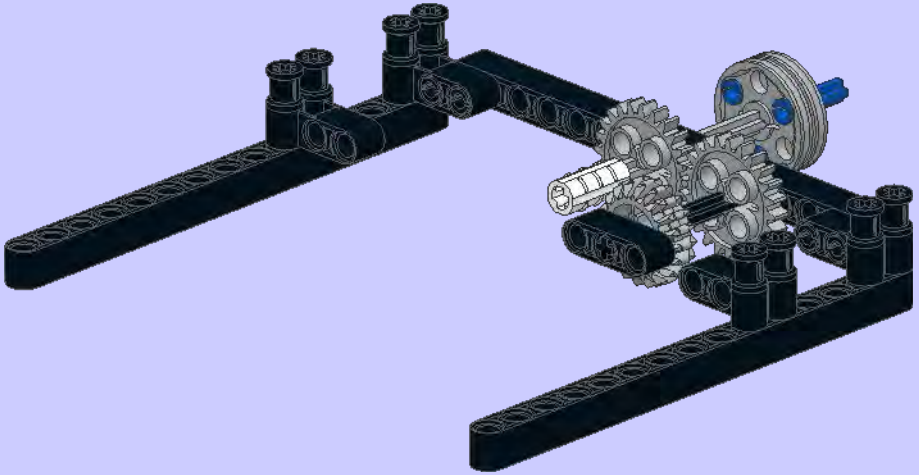

7

6x

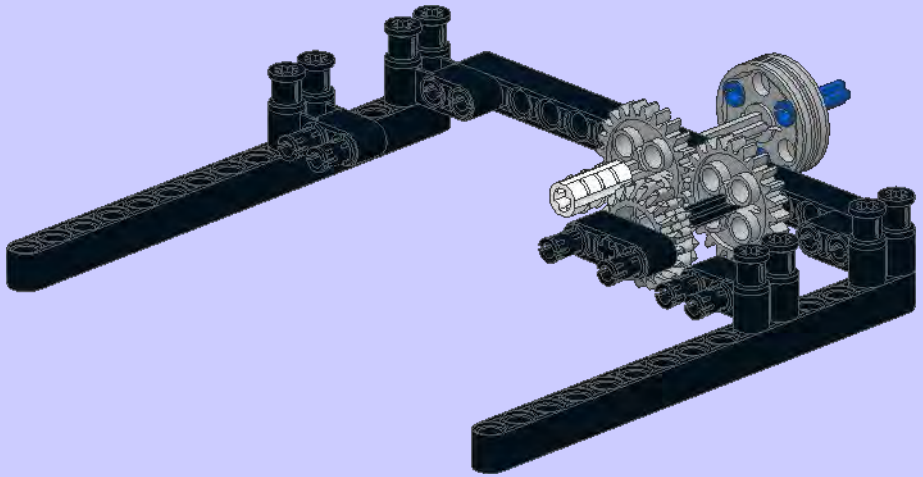

8

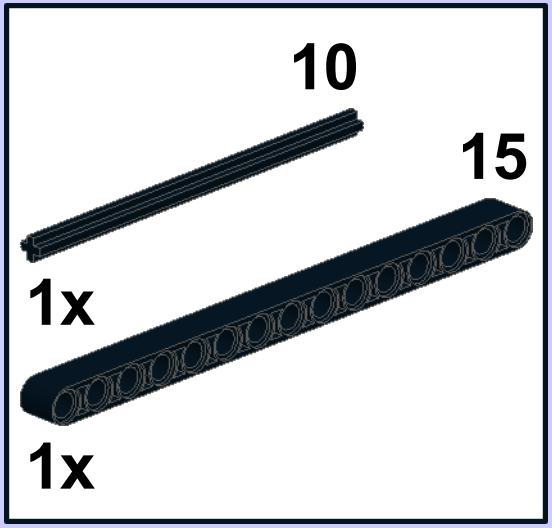


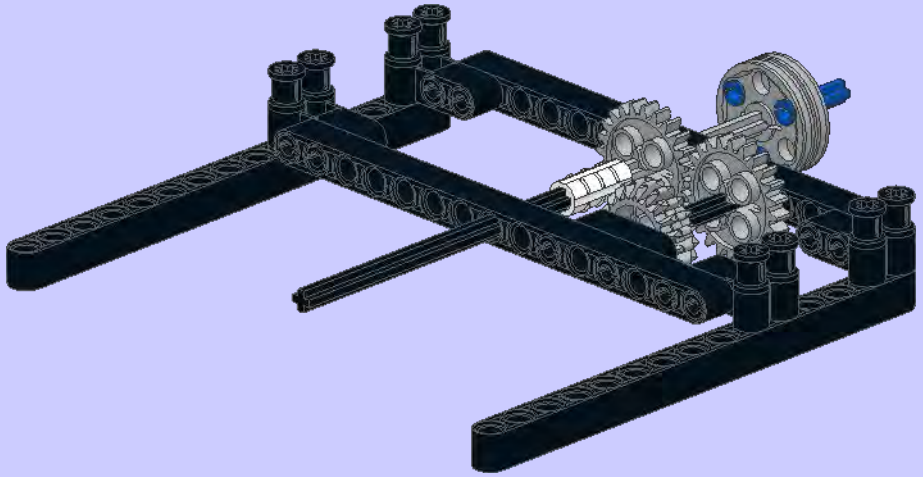

9

2x

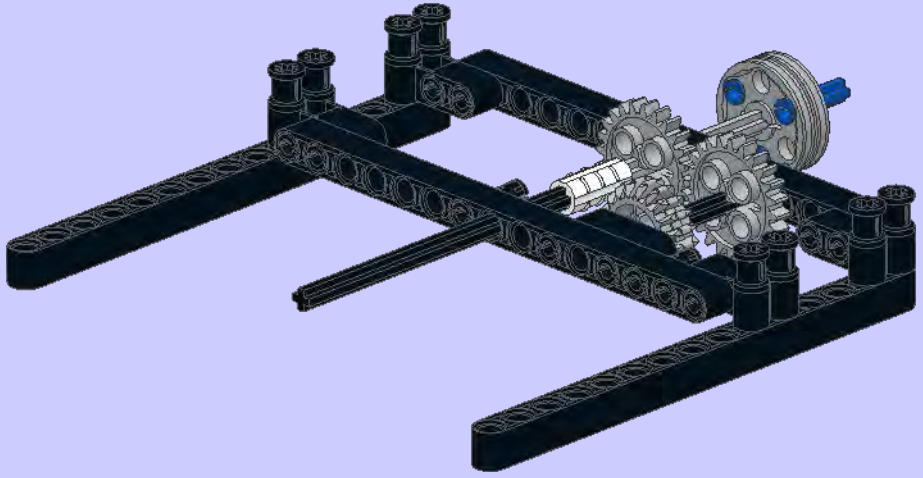

**10**

**11**

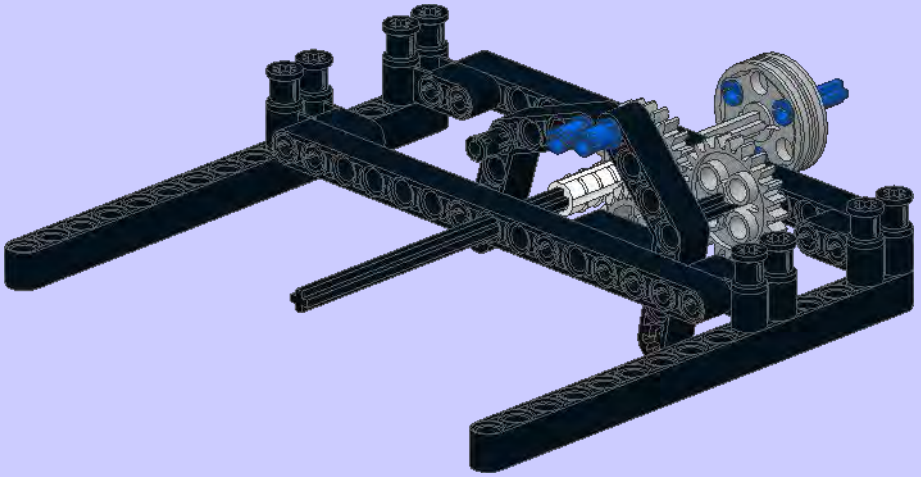

**12**

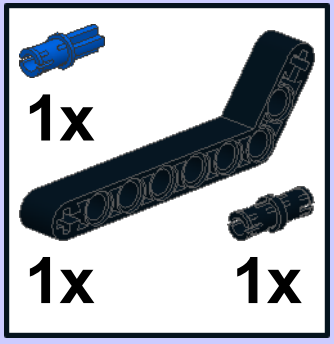


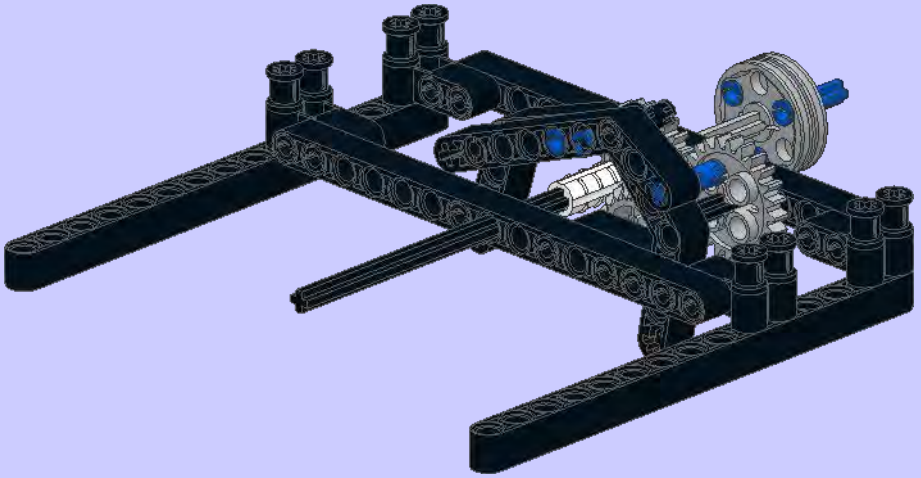

13

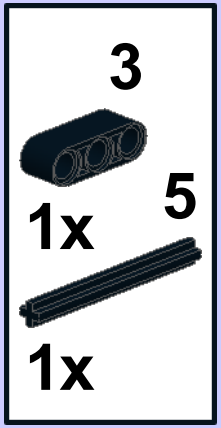


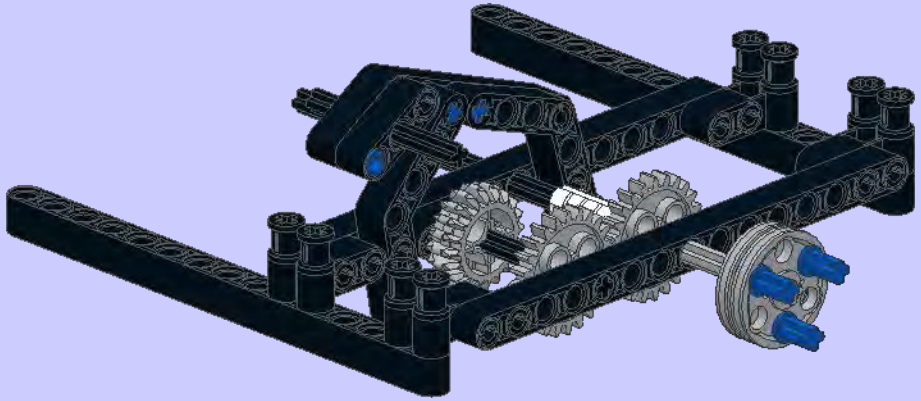

14

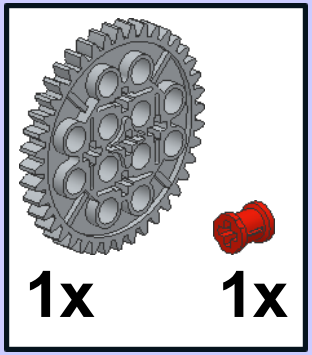


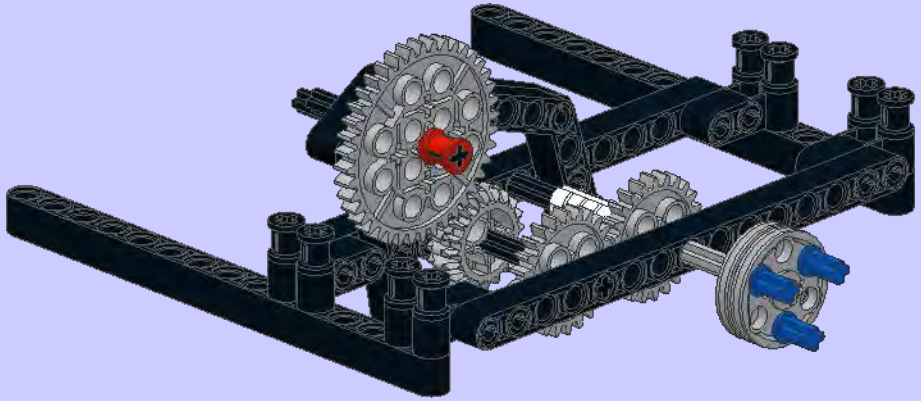

15

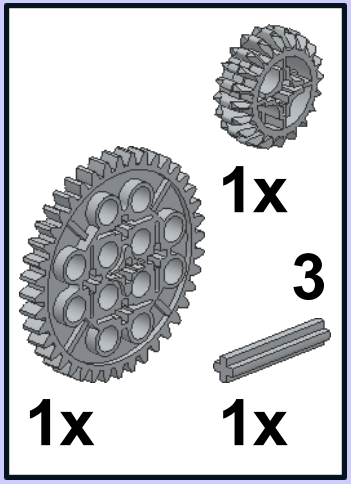


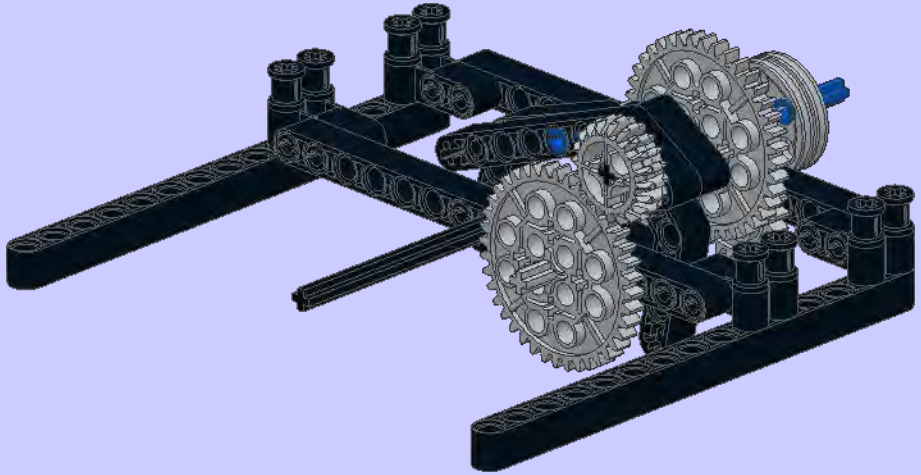

**16**

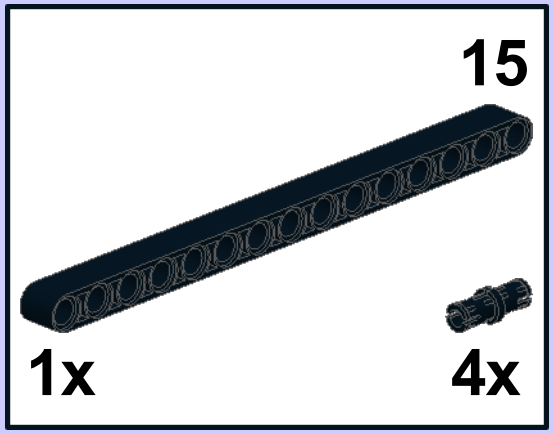


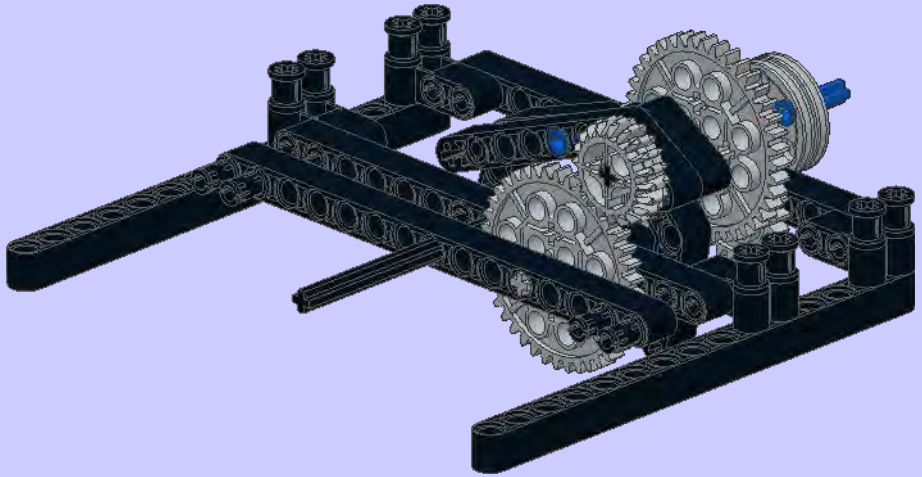

**17**

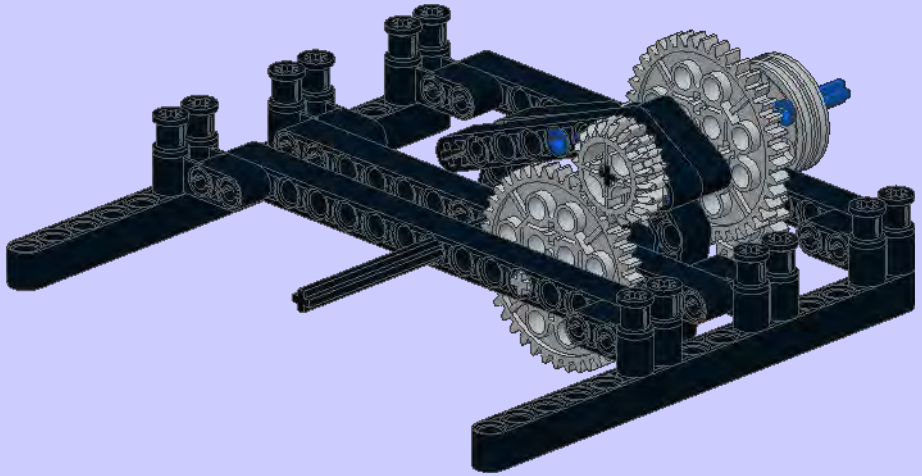

**18**

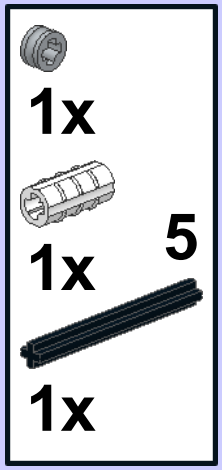


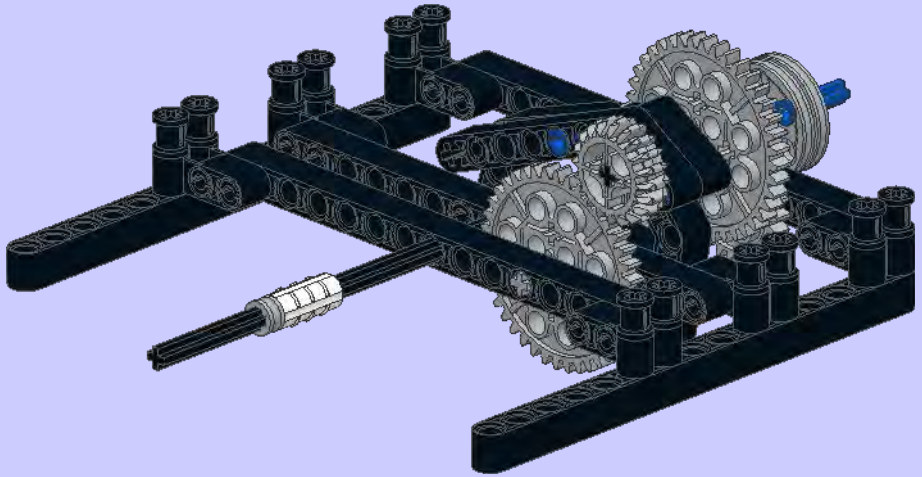

19

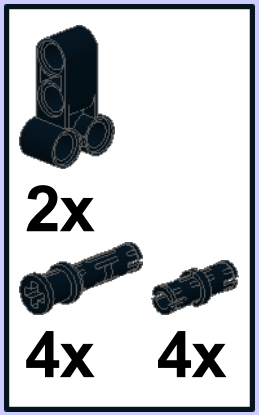


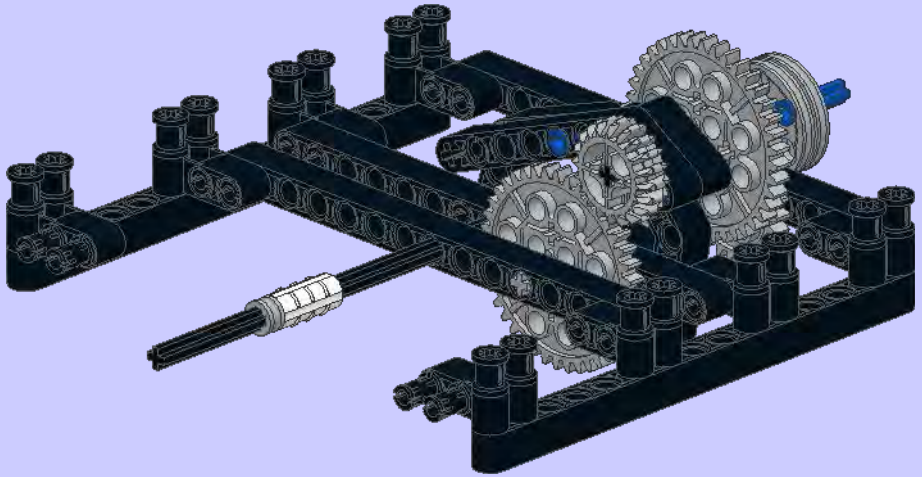

20

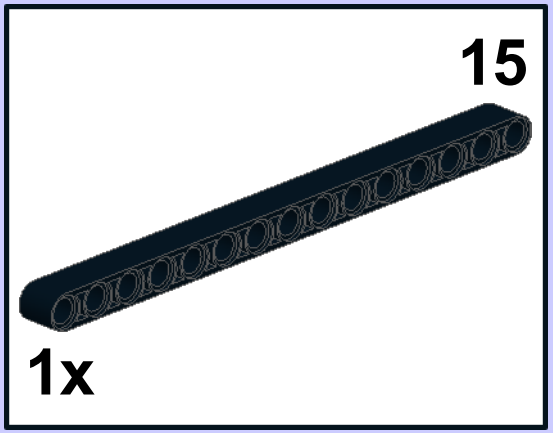


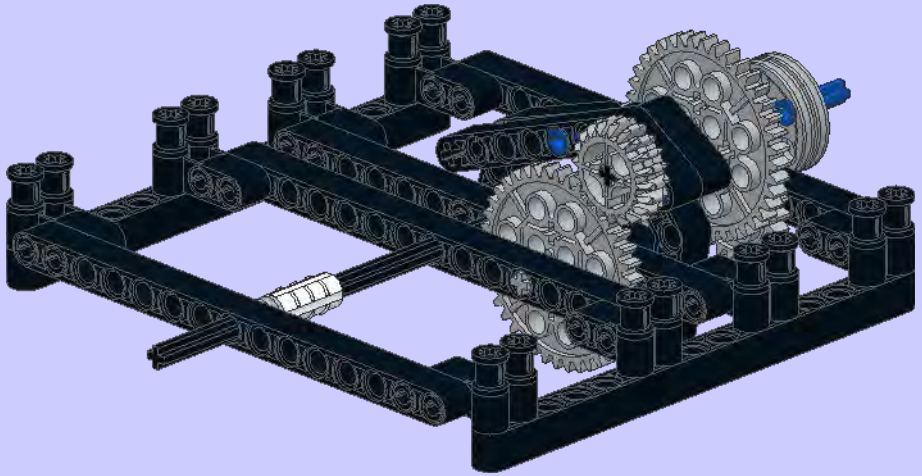

21

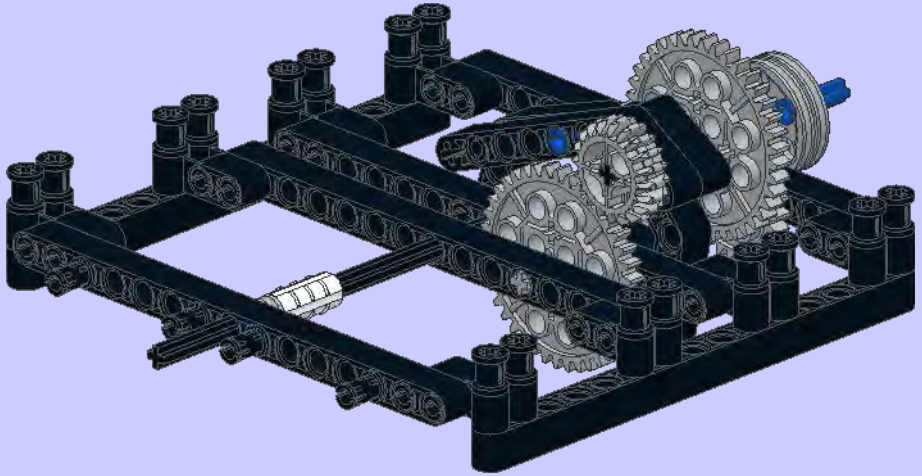

22

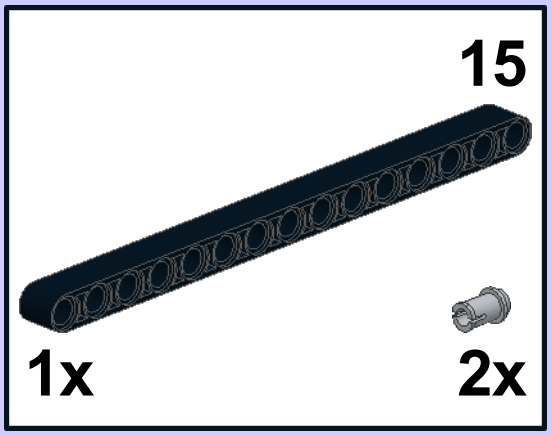


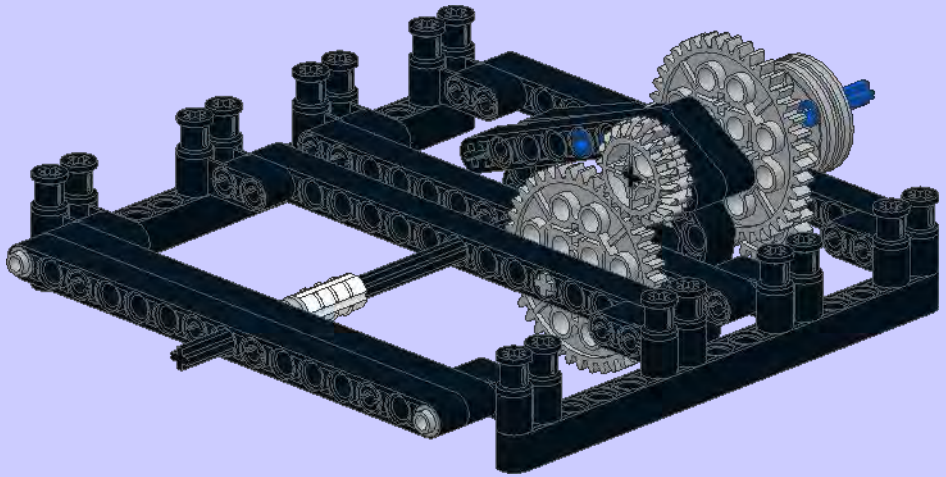

23

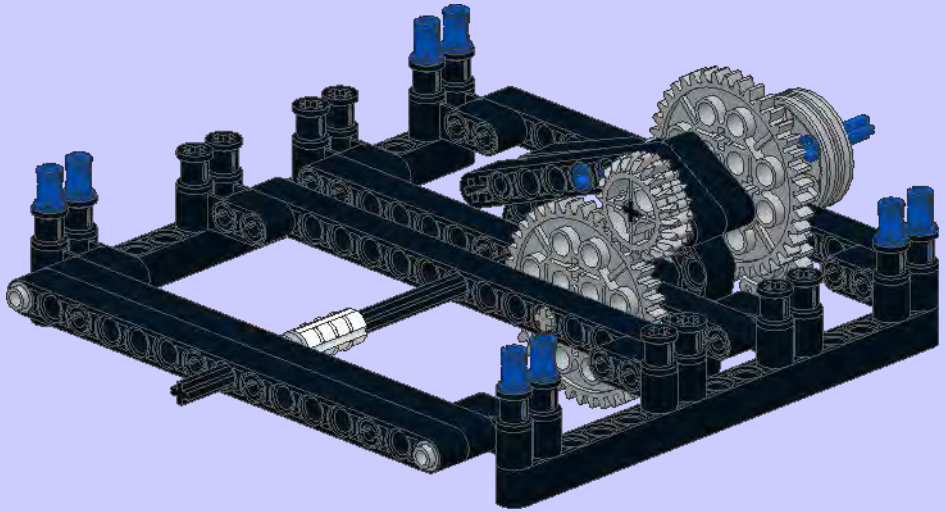

24

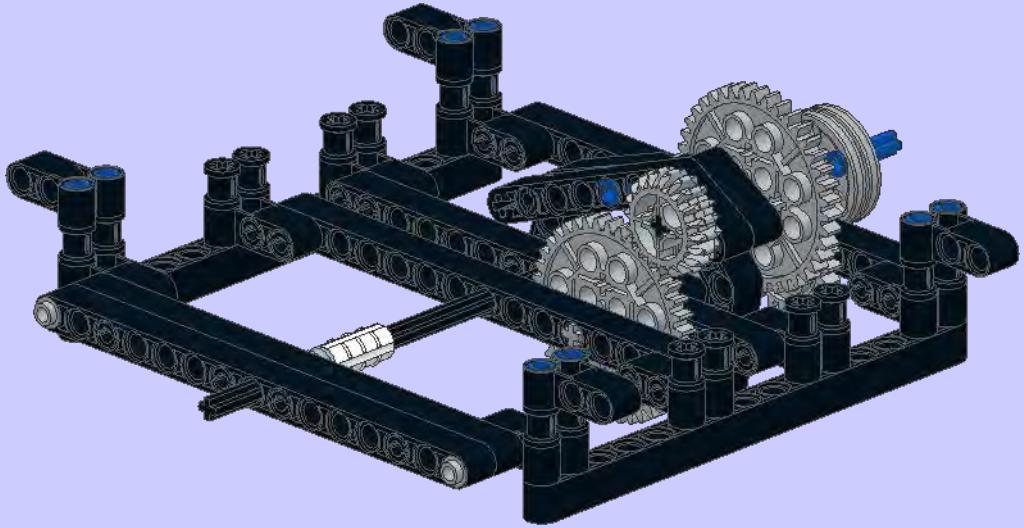

13

1x

2x

3

1x

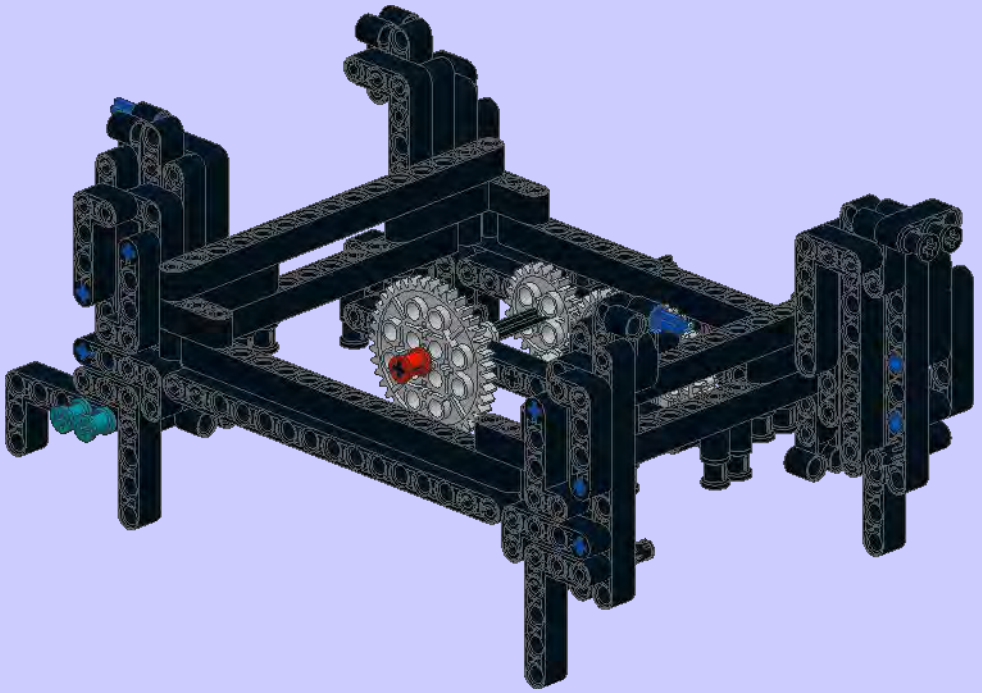

14

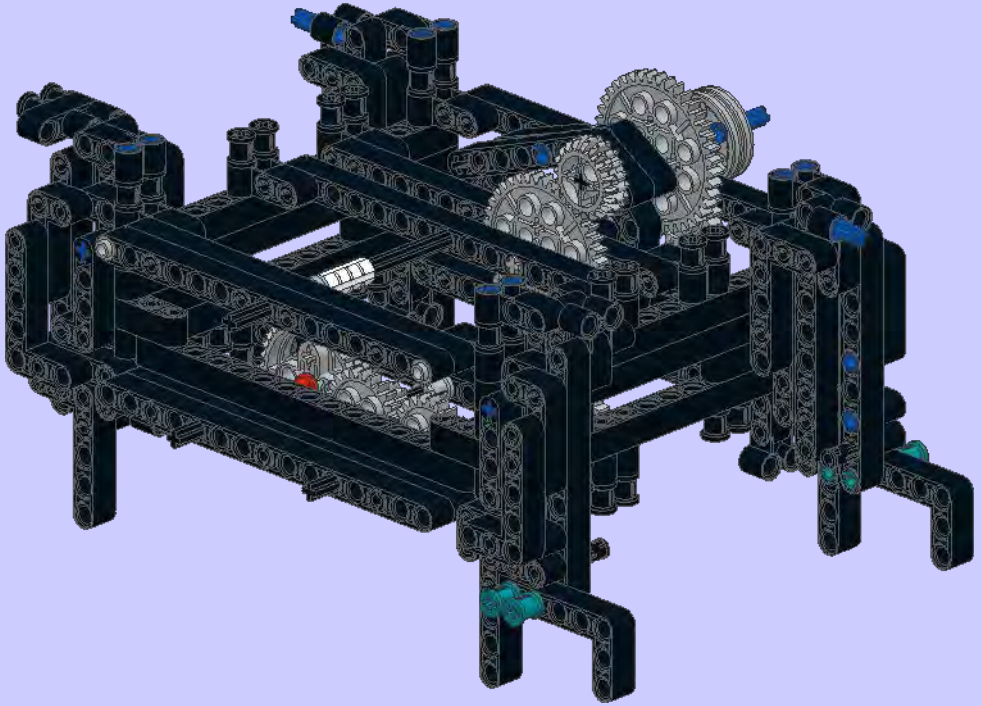

15

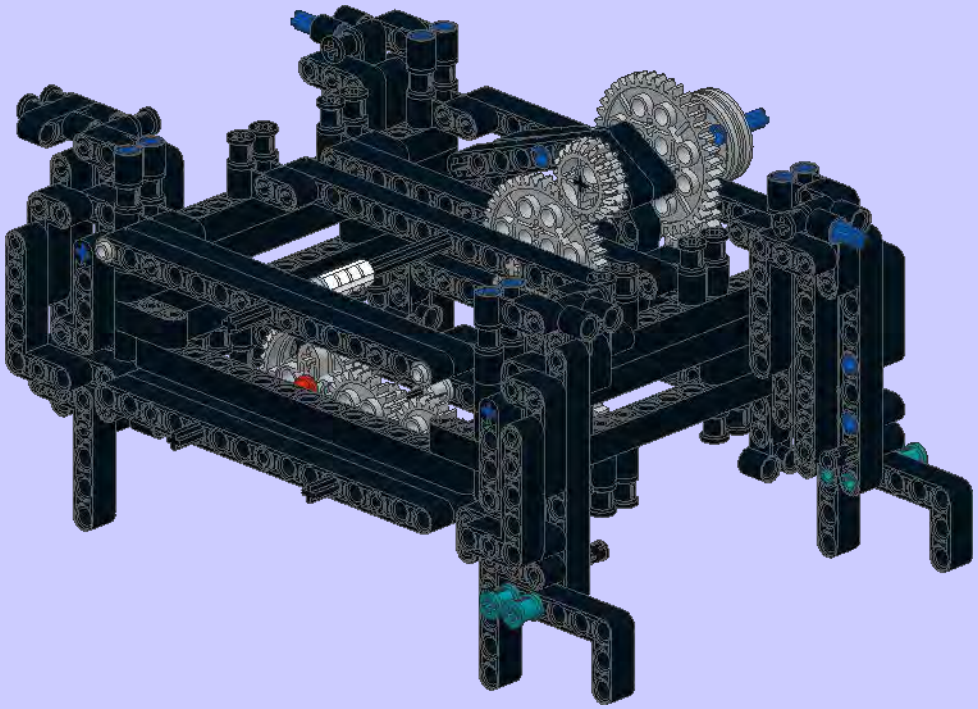

16

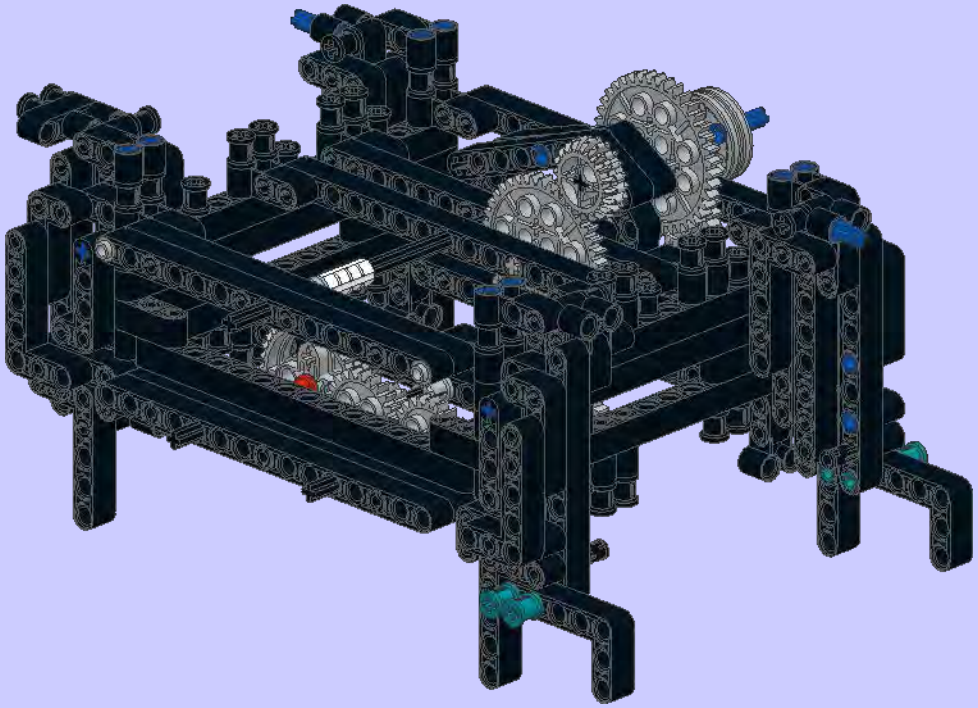

1

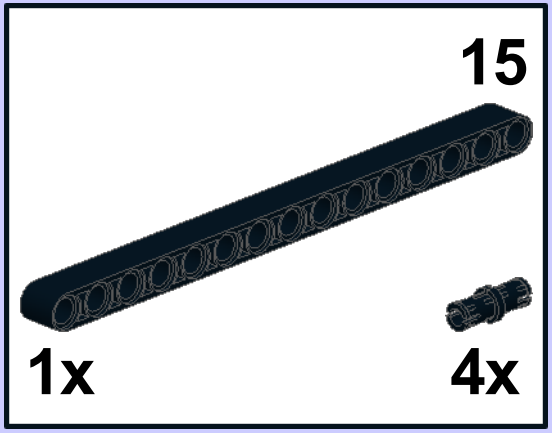


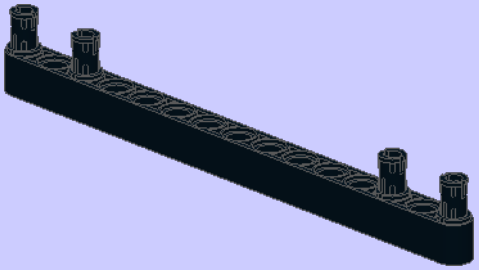

2

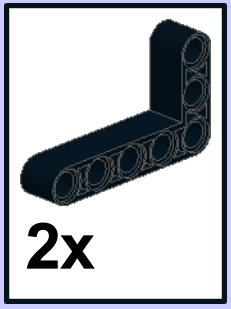


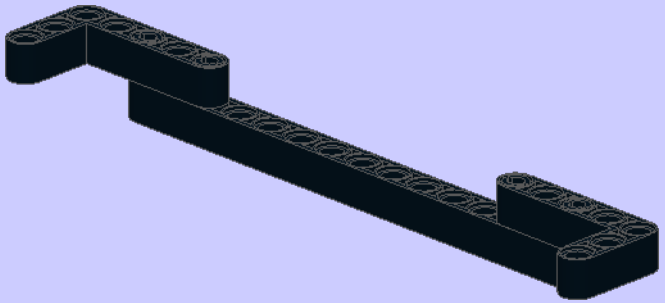

3

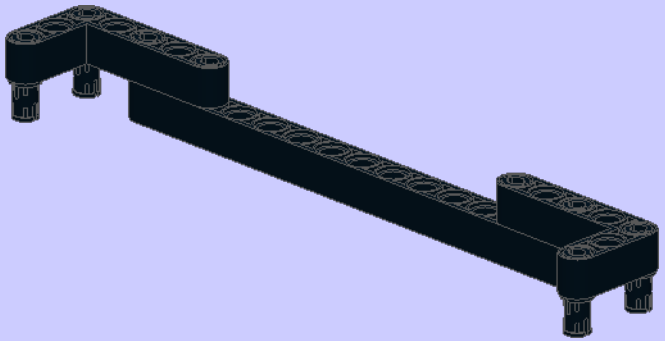

4

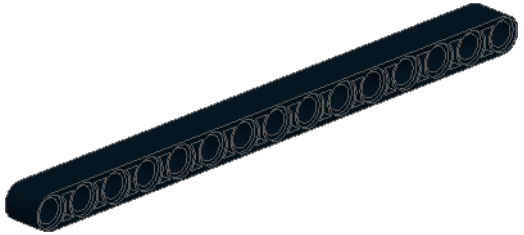


2x

5

4x

6

4x

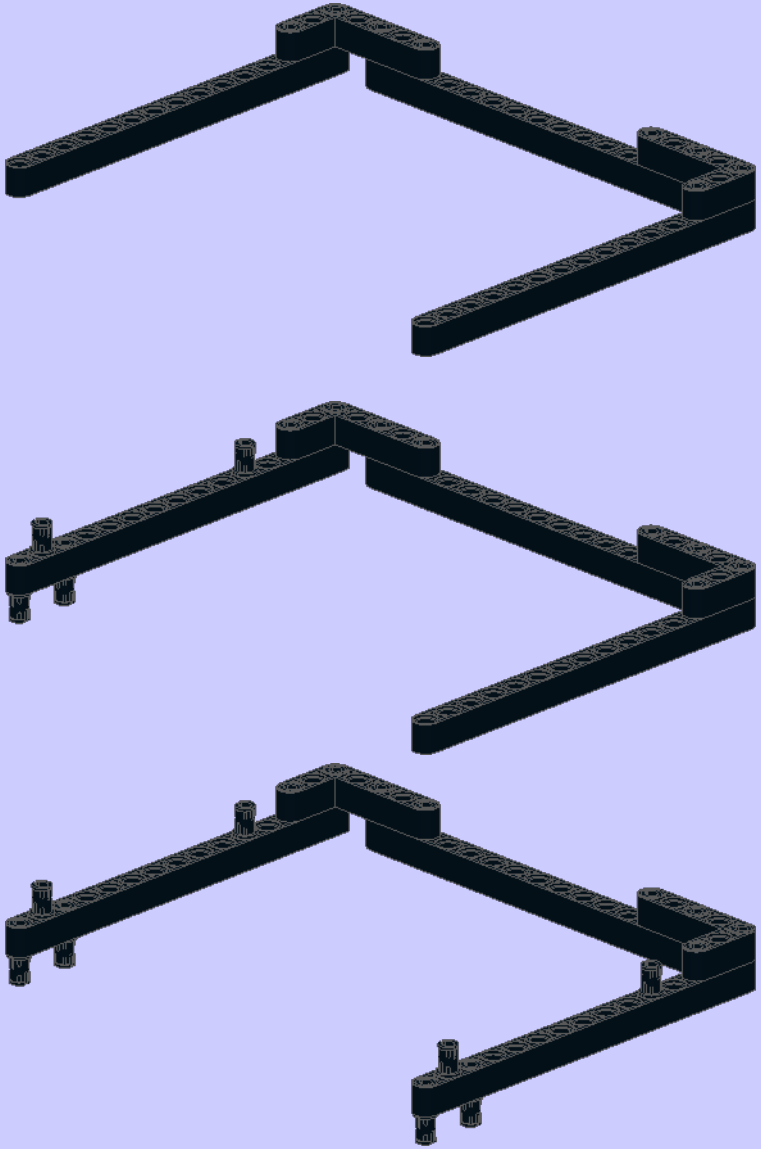

7

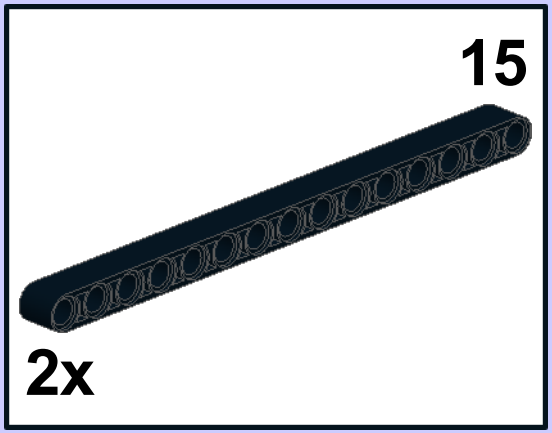


8

9

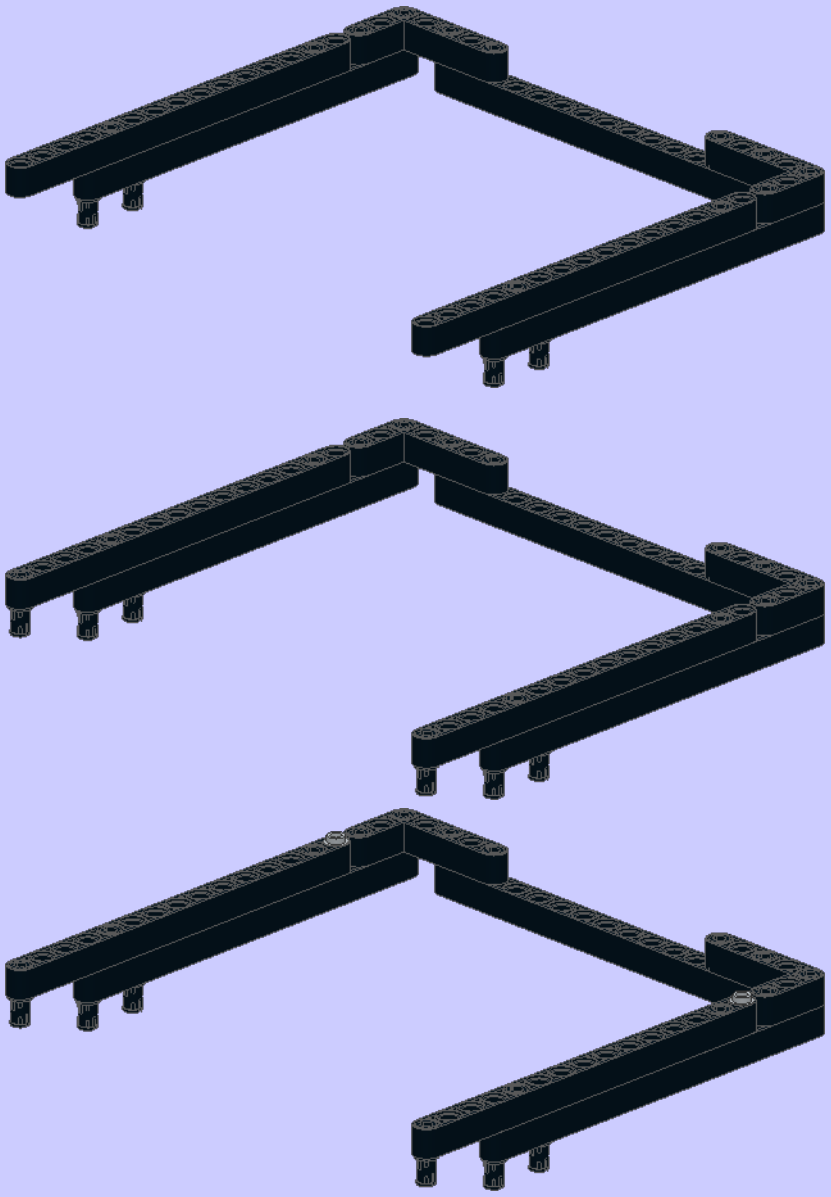

x2

17

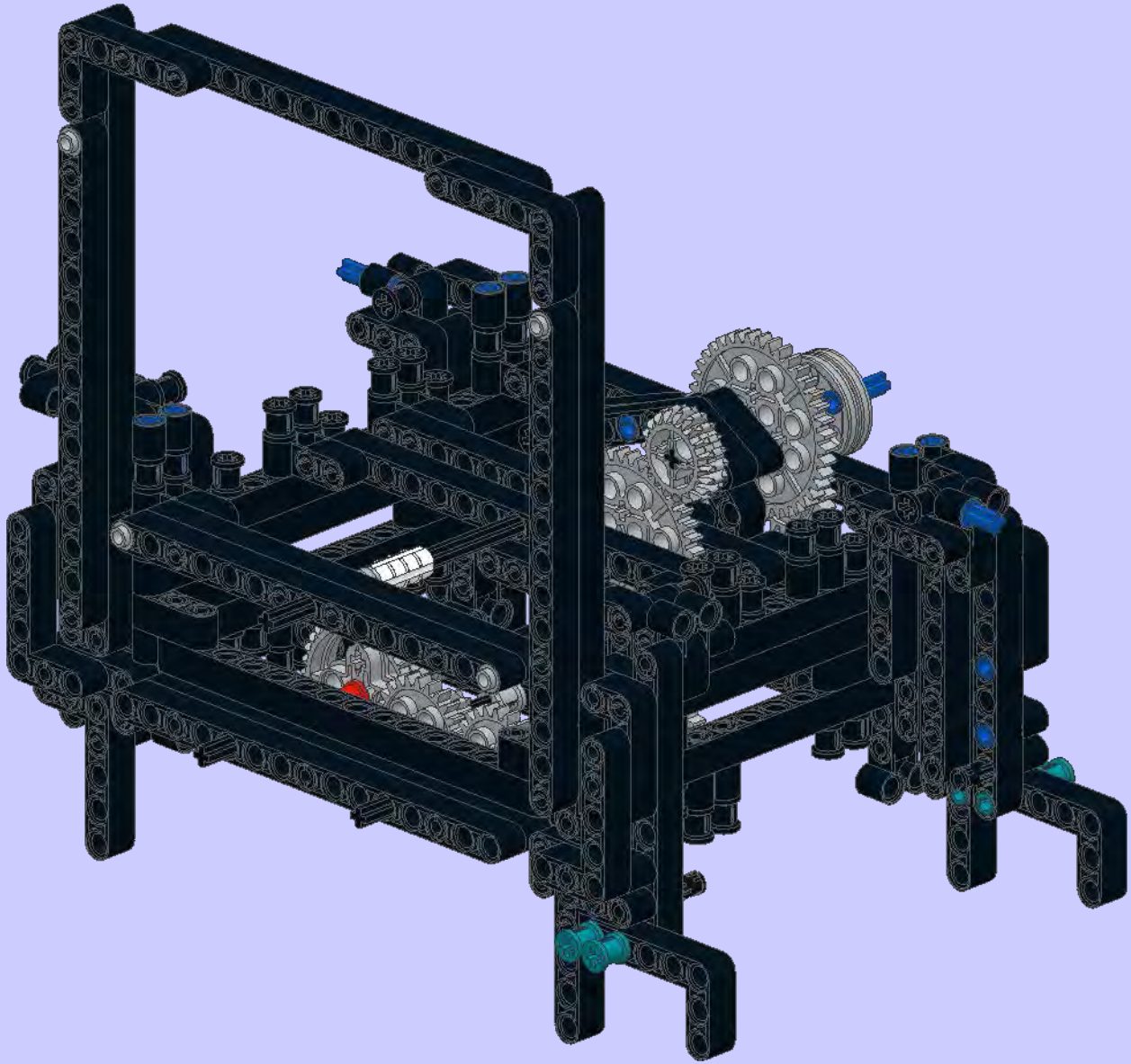

1

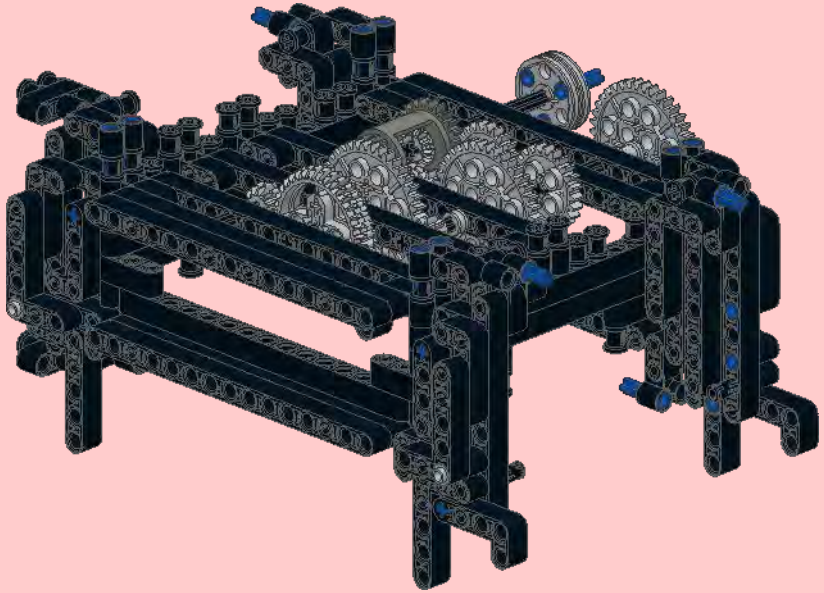

2

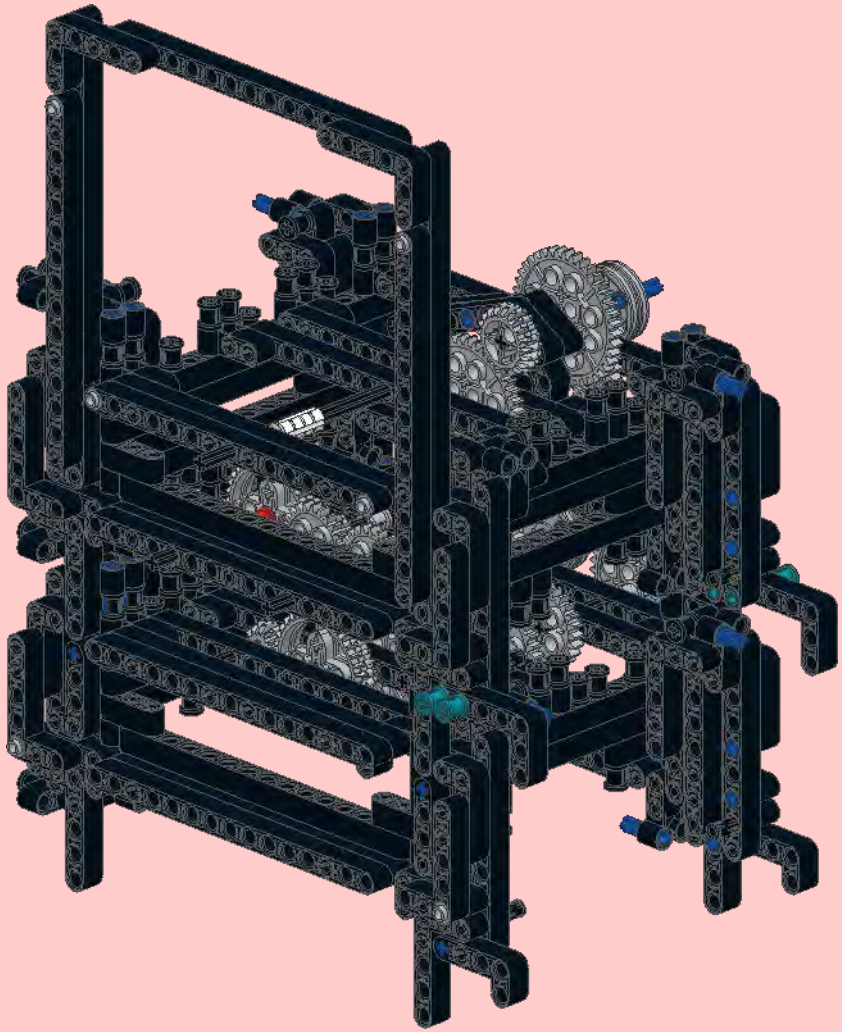

3

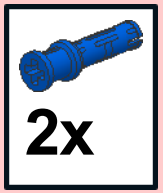


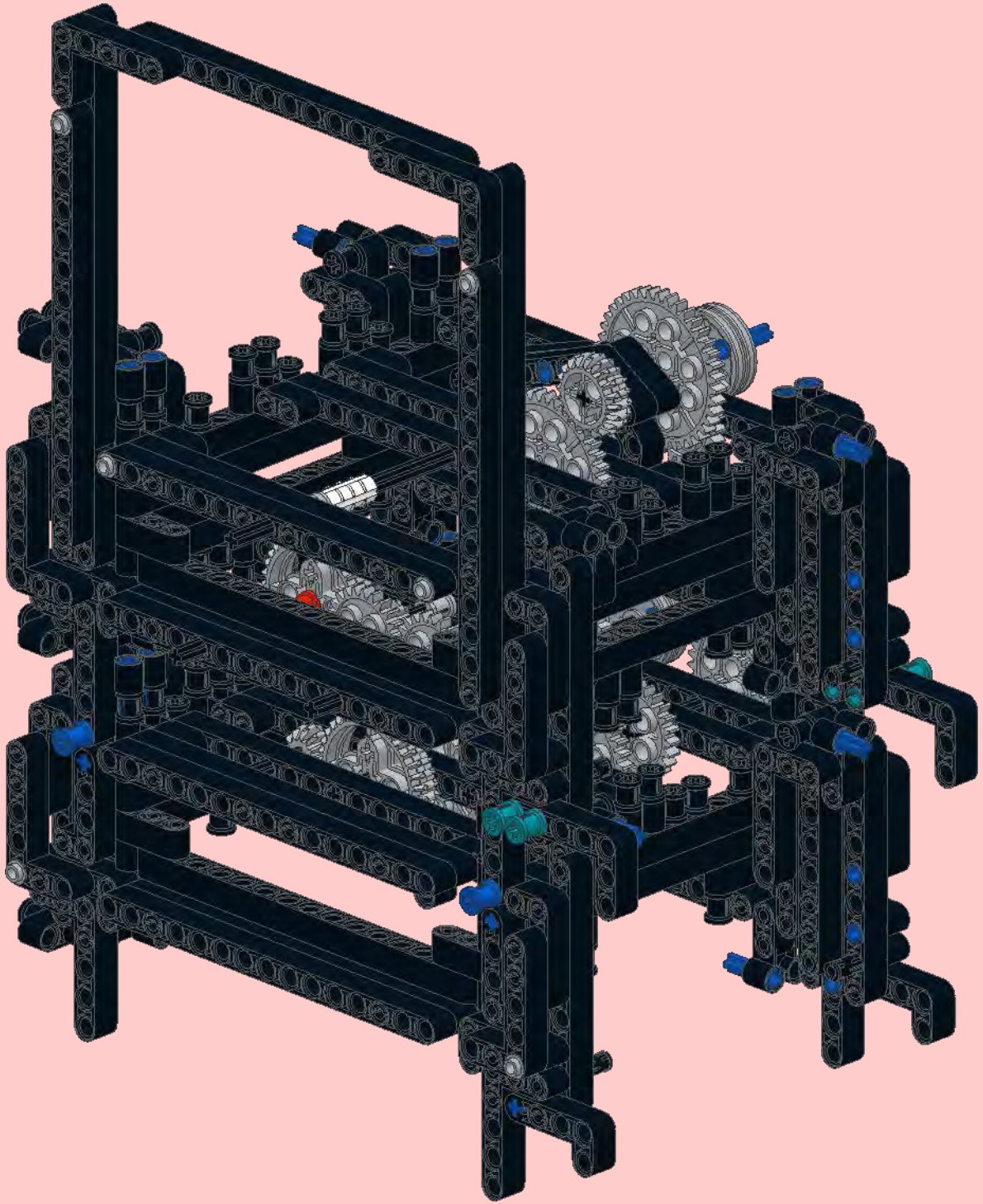

4

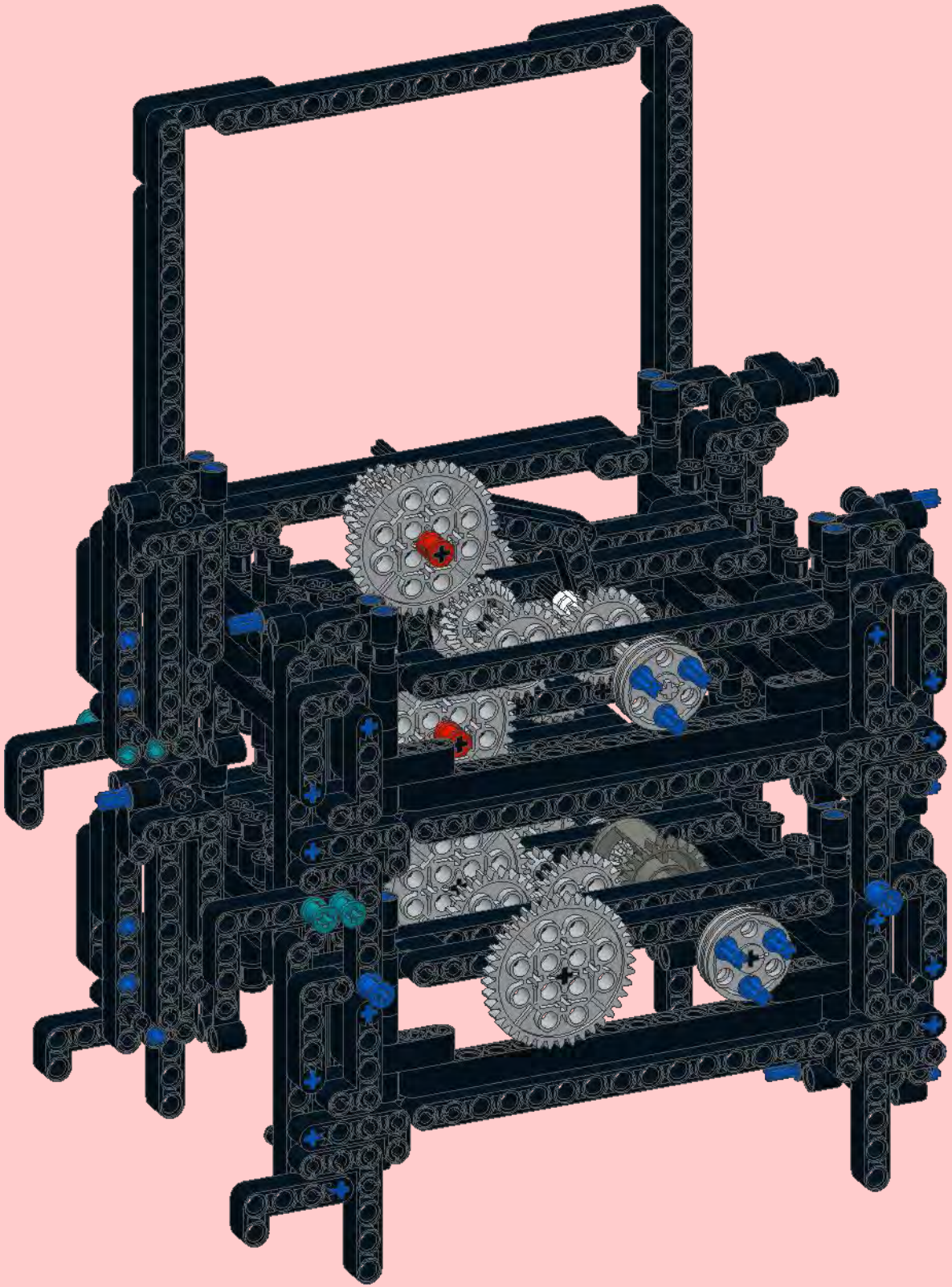

1

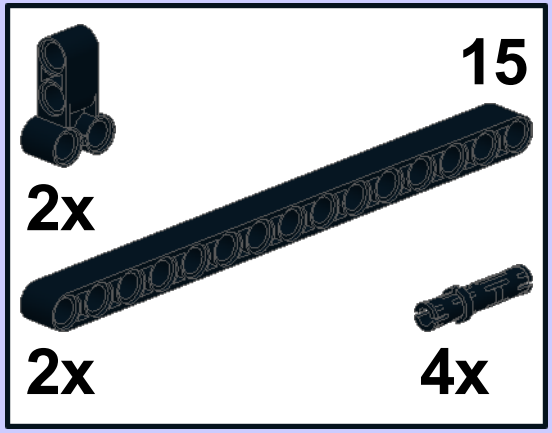


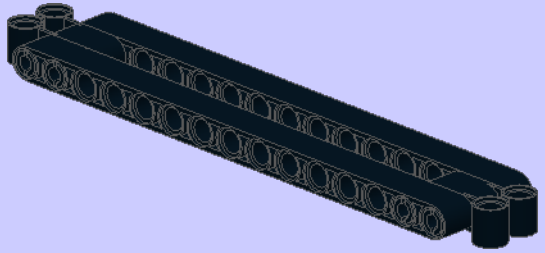

2

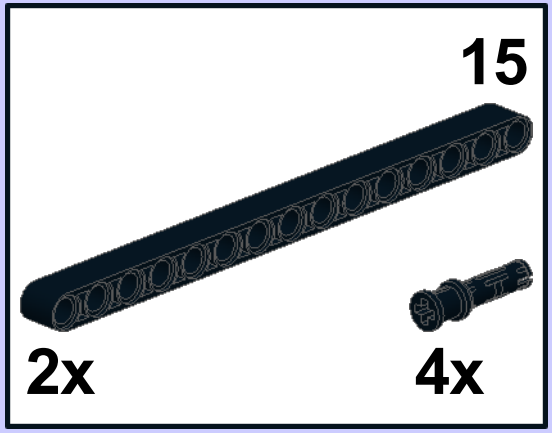


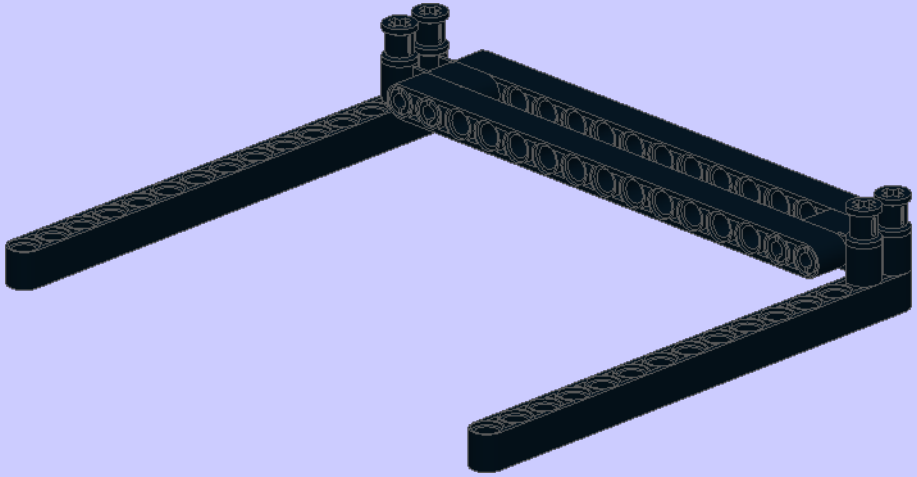

3

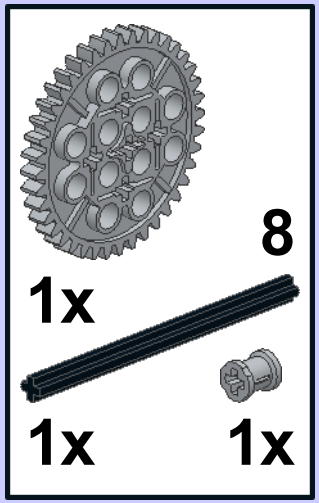


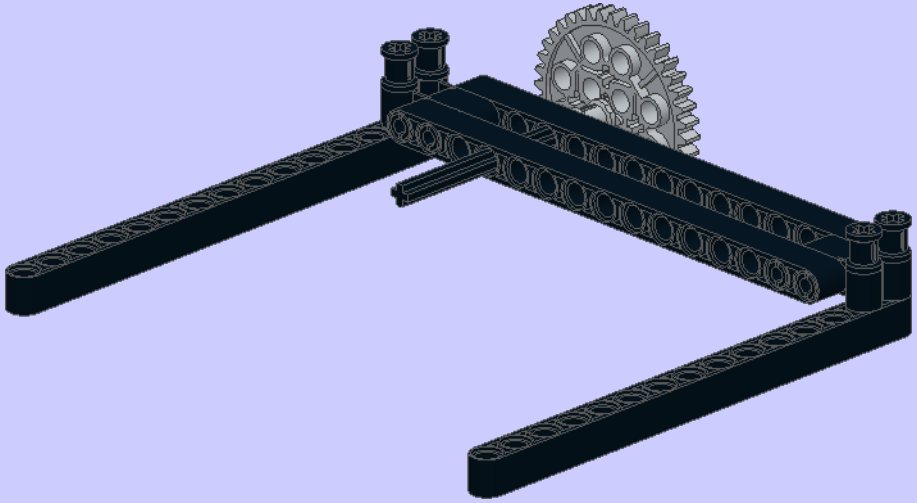

**4**

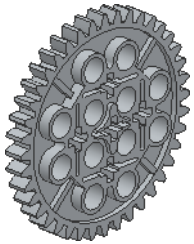


**5**

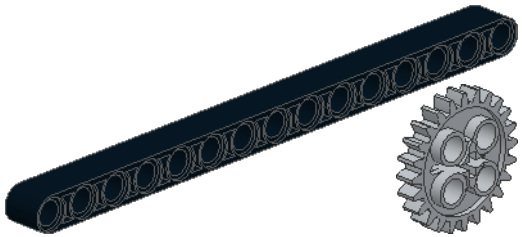


**6**

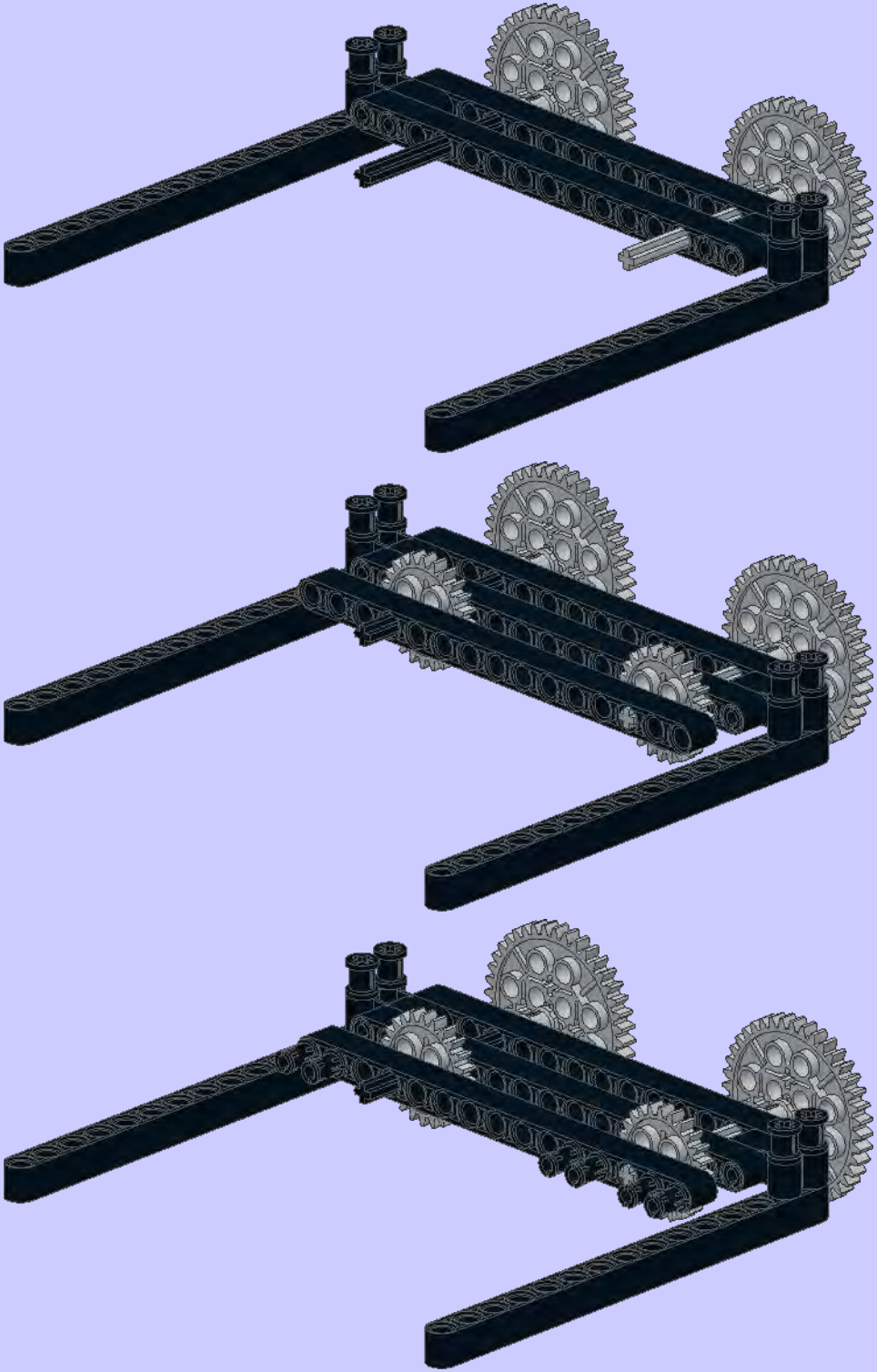

7

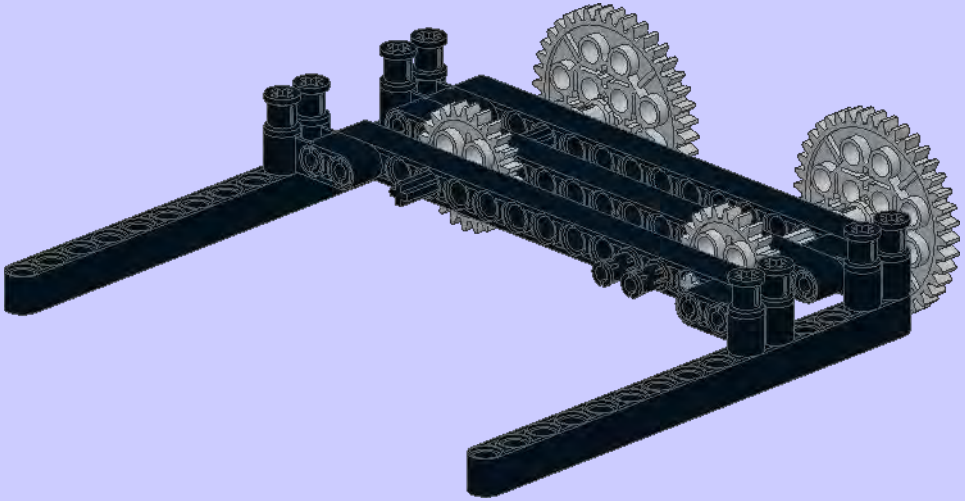

8

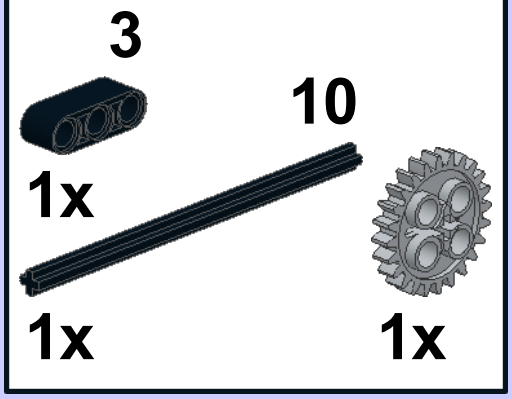


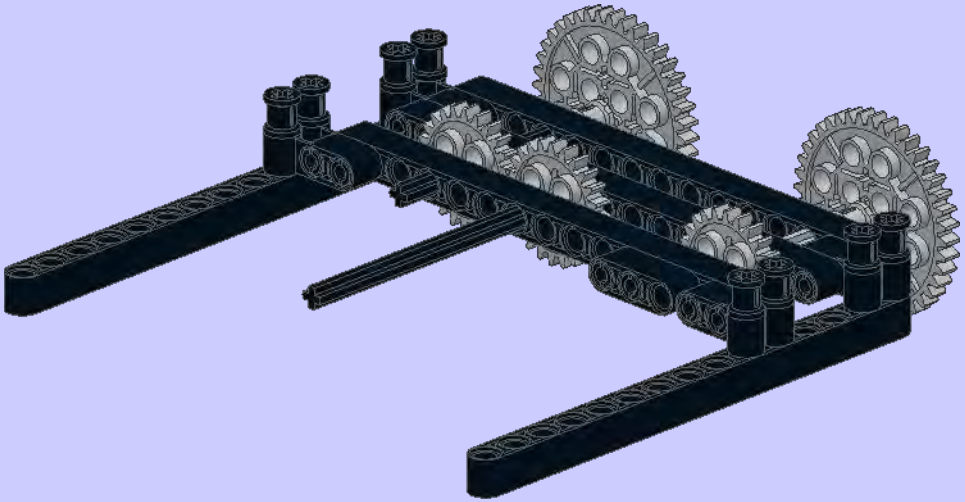

9

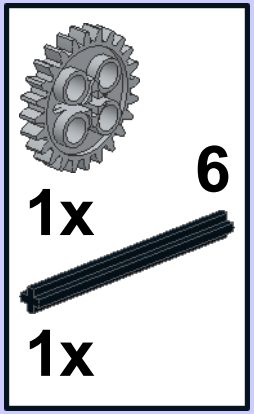


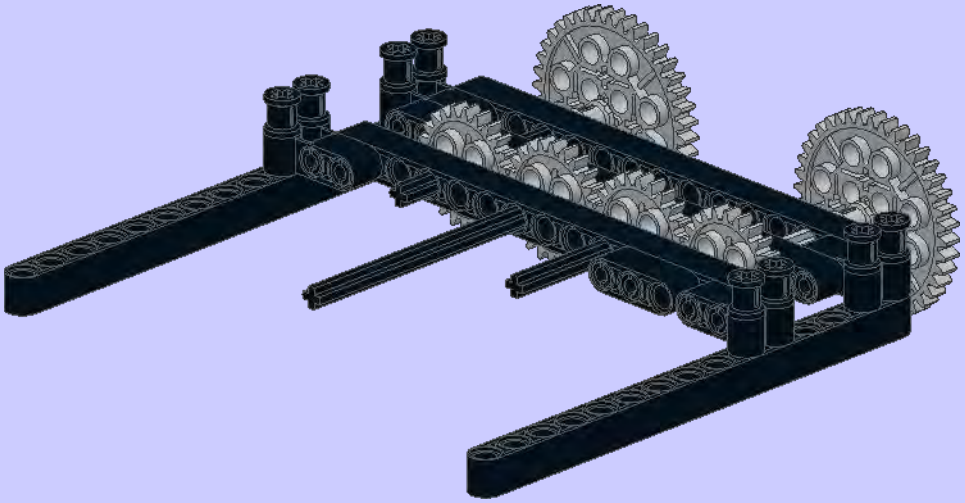

**10**

1x

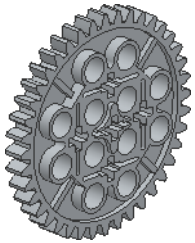

4

1x 1x

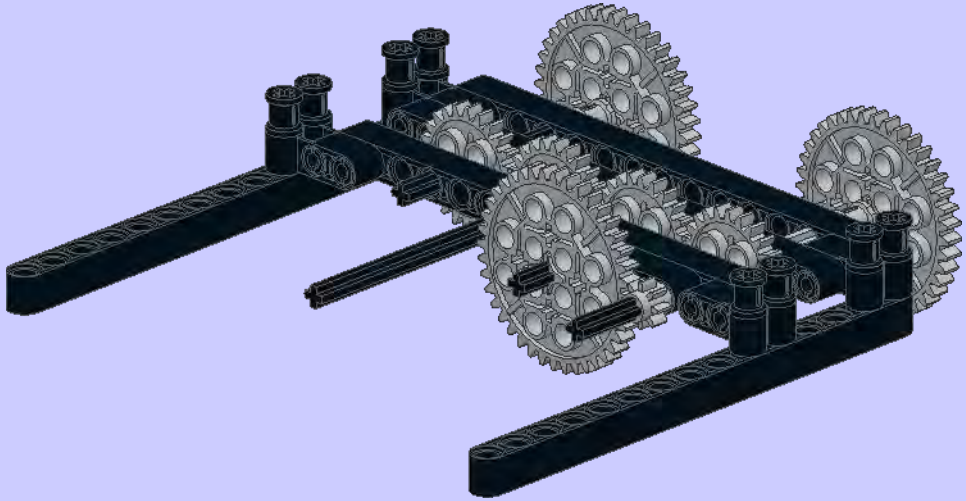

**11**

15

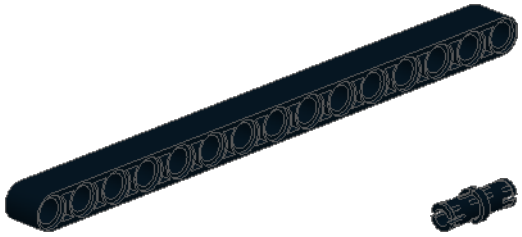



1x 6x

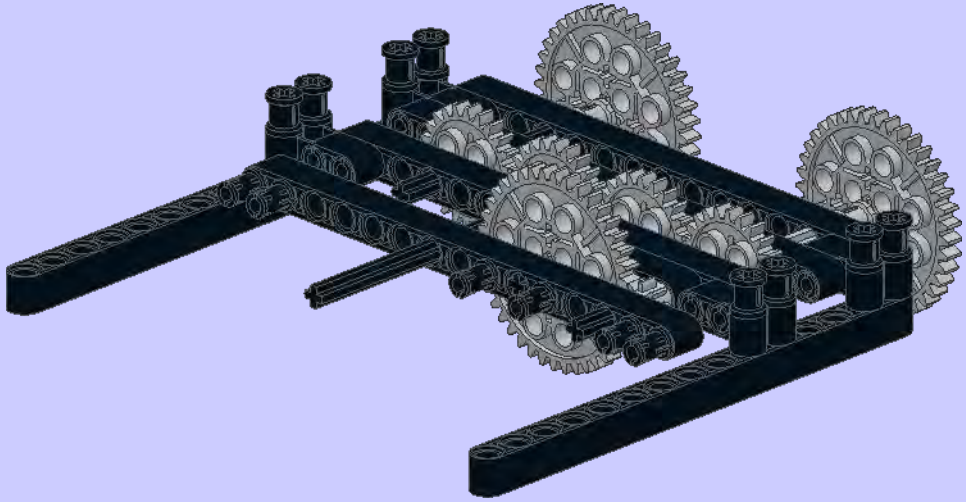

**12**

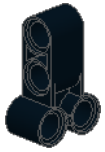

2x

4x

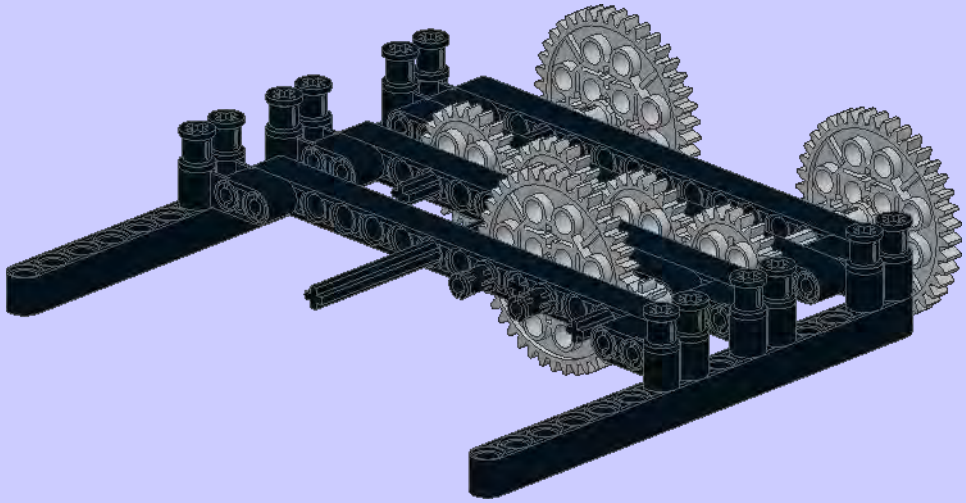

13

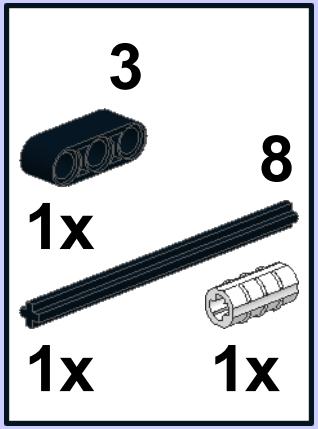


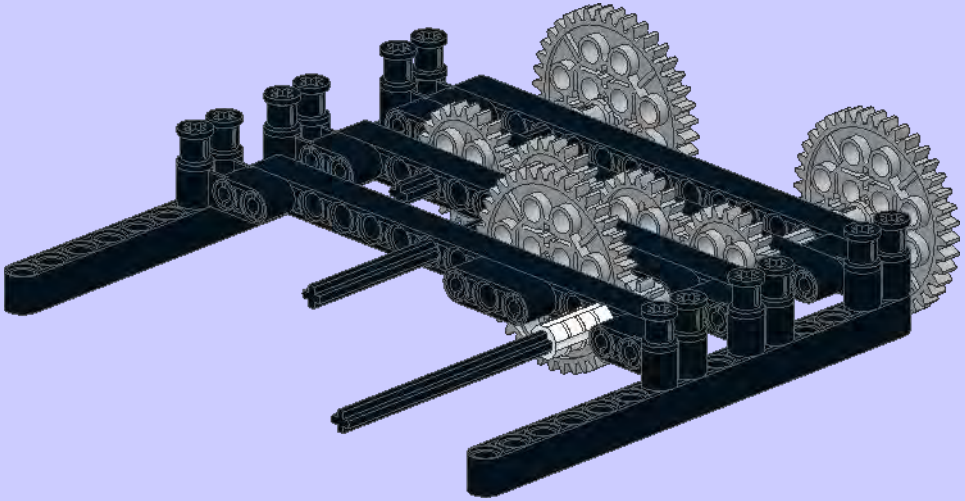

14

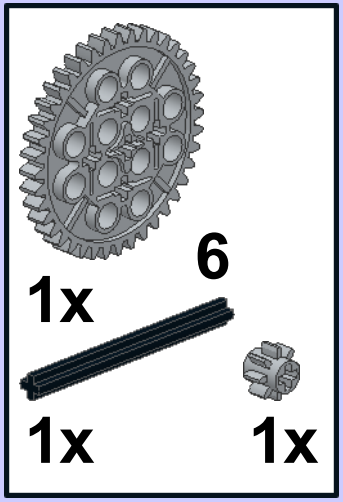


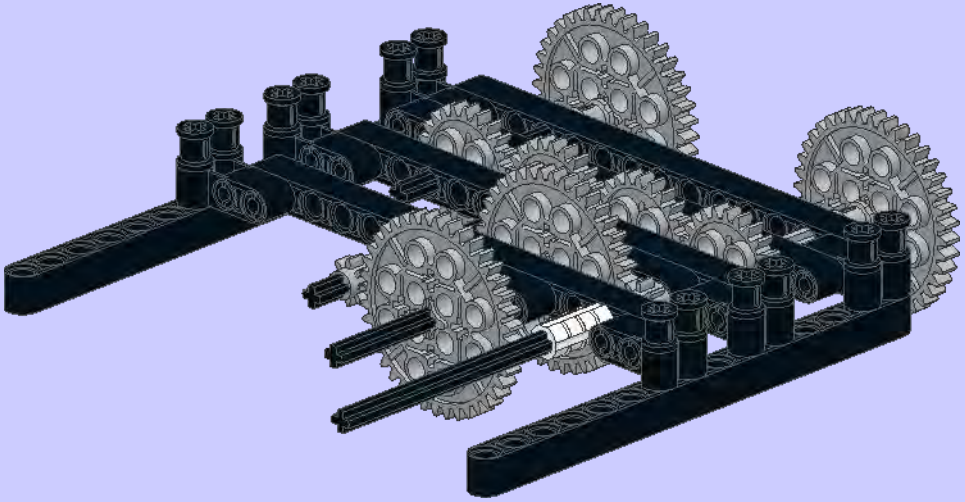

15

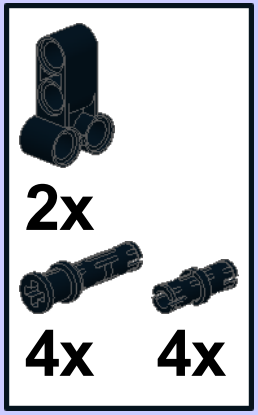


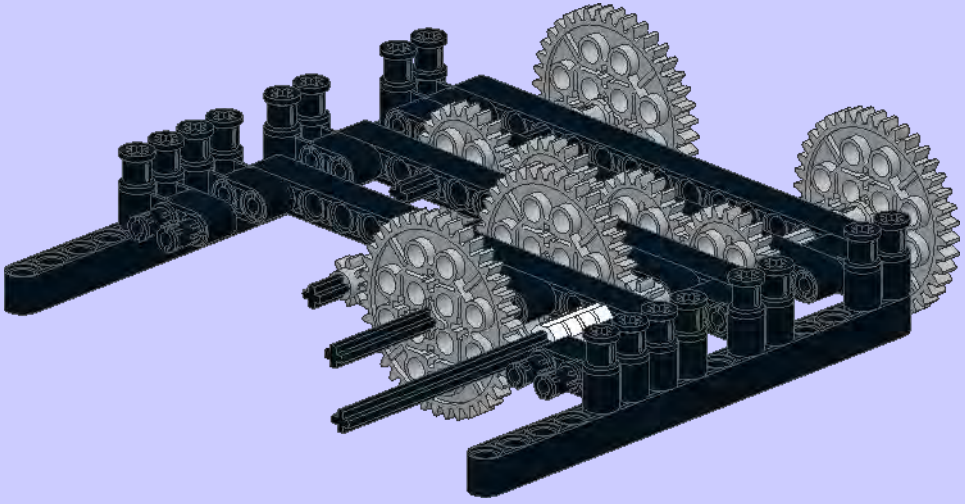

**16**

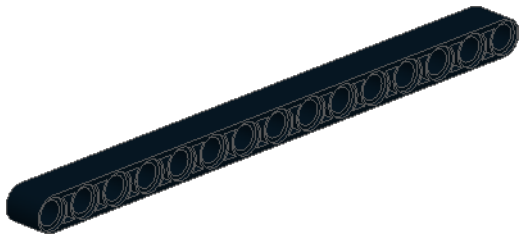


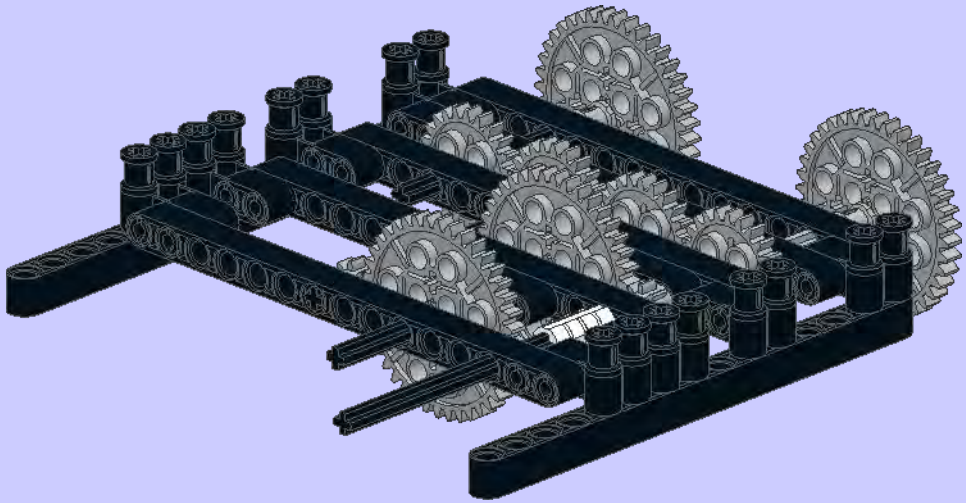

**17**

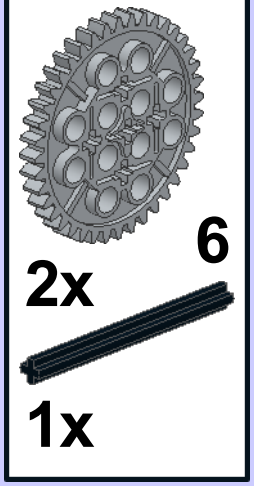


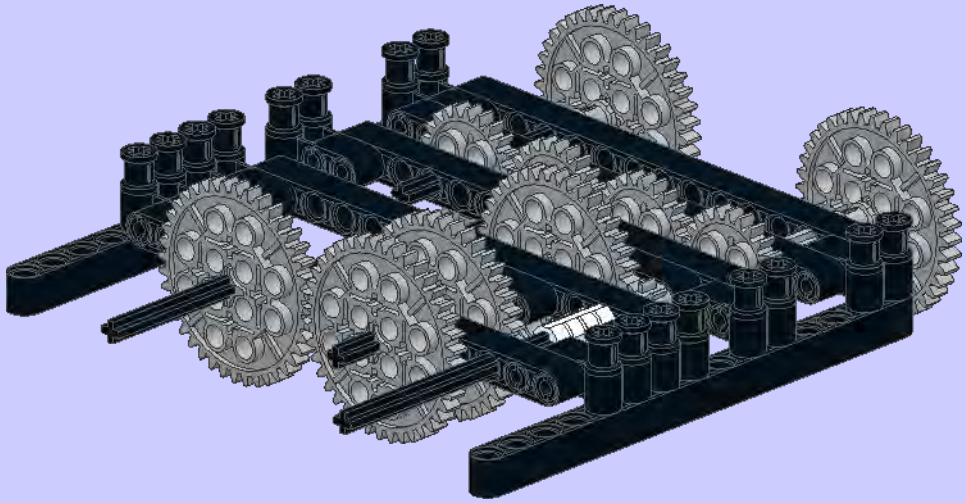

**18**

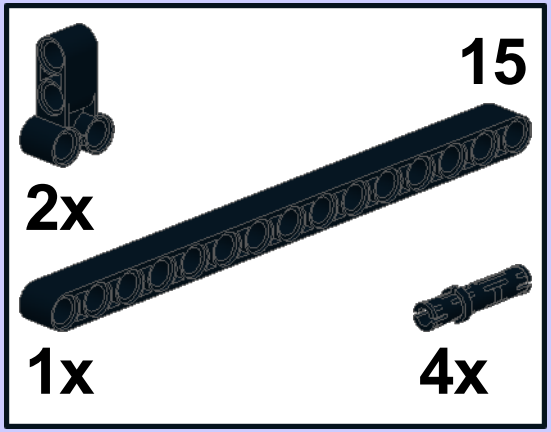


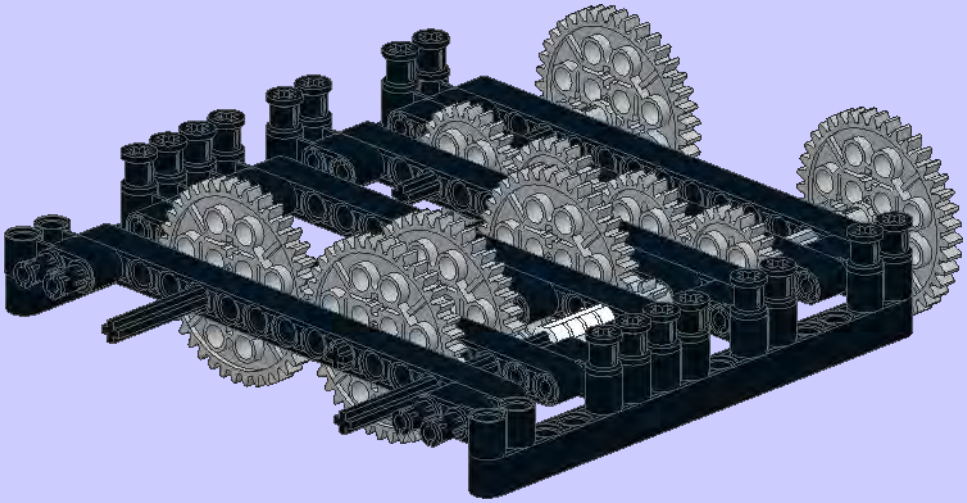

19

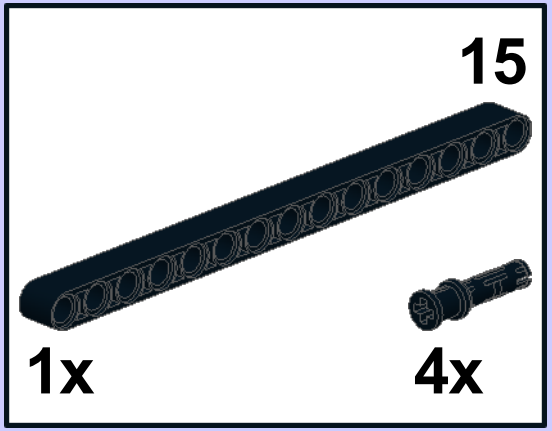


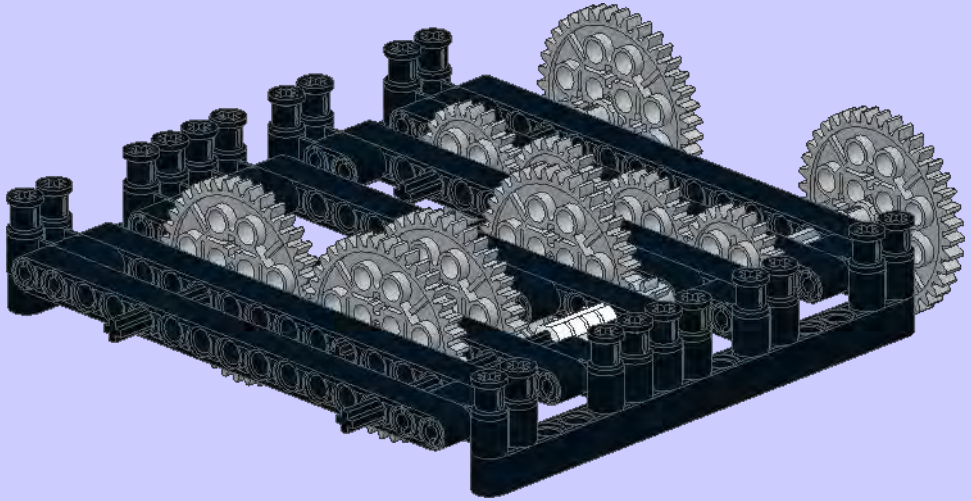

20

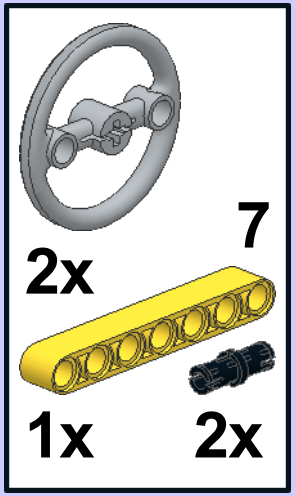


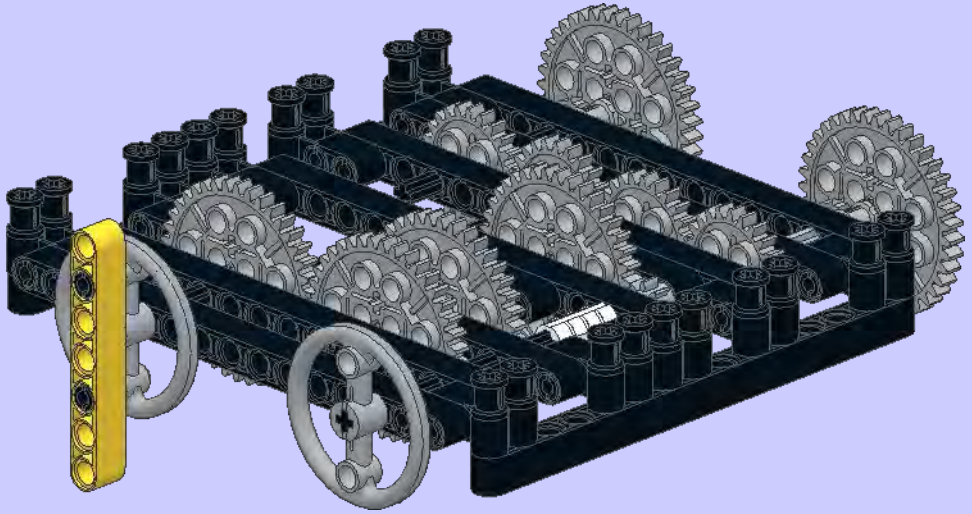

21

8x

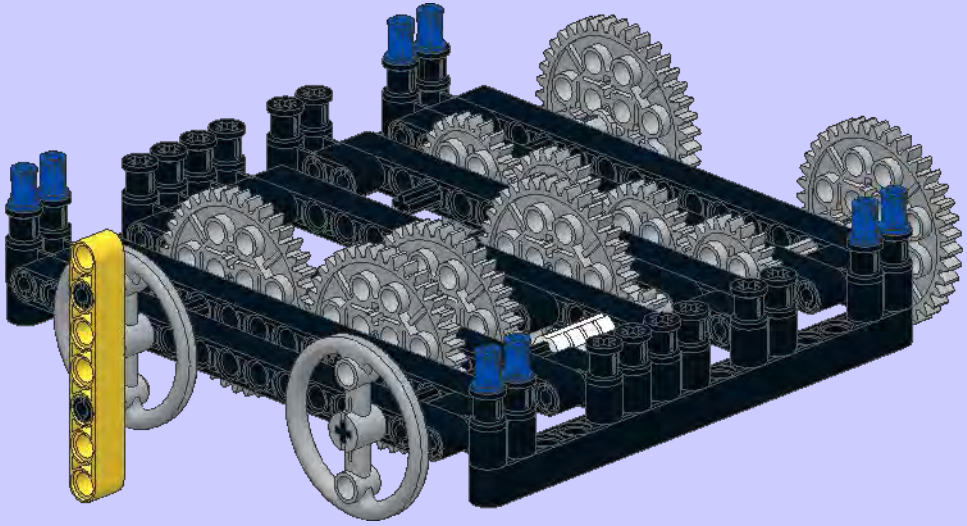

22

4x

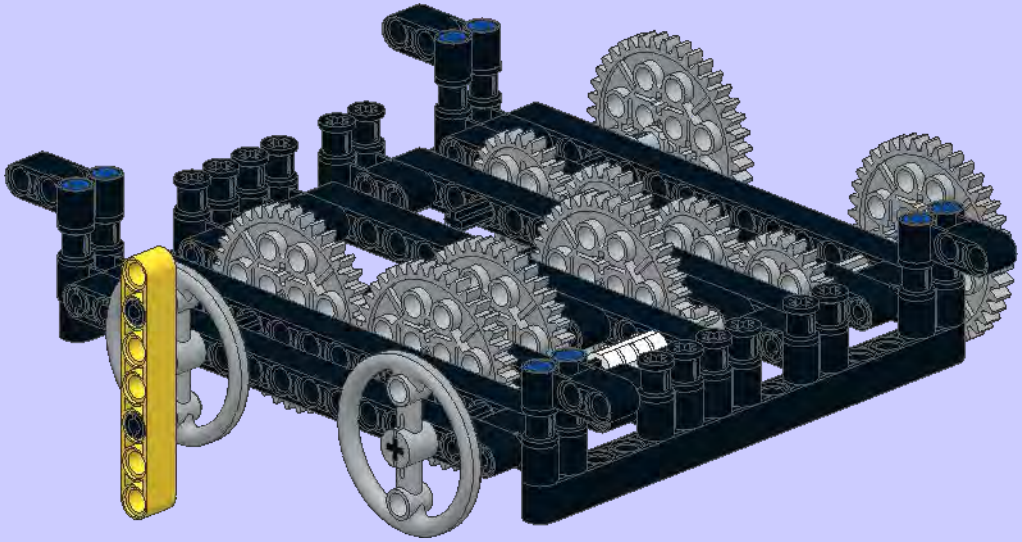

1

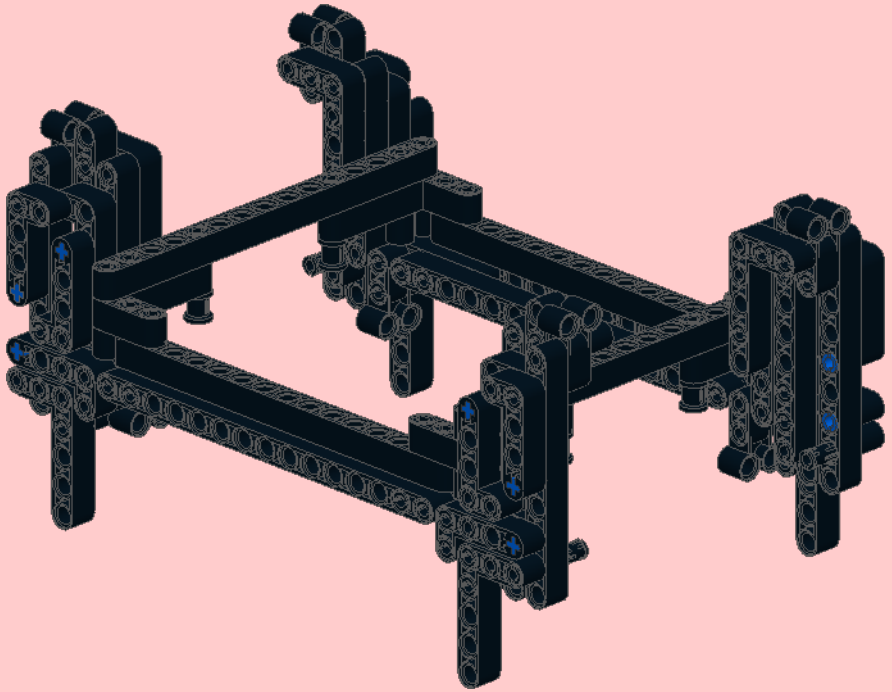

2

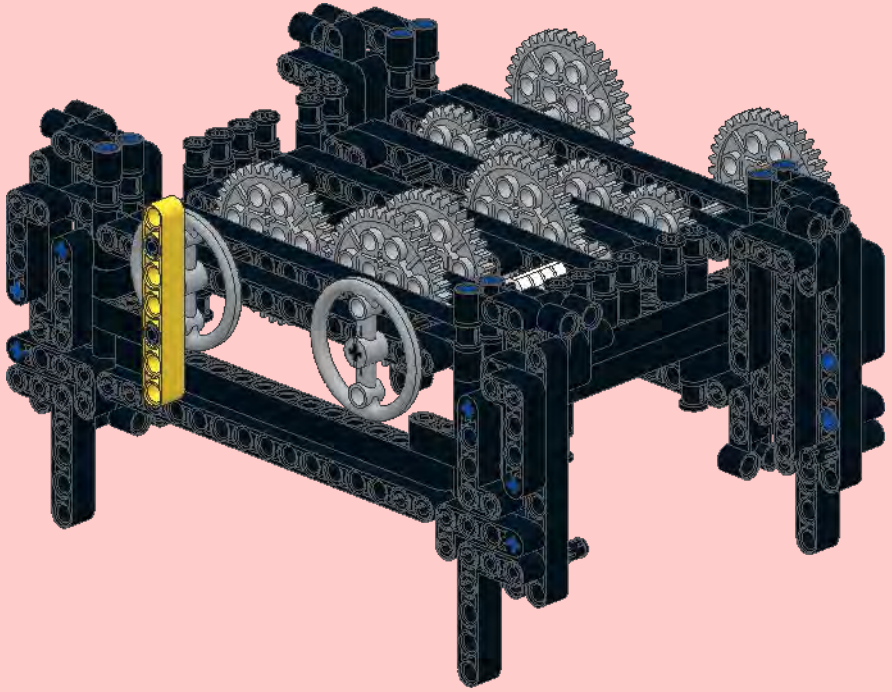

3

3x

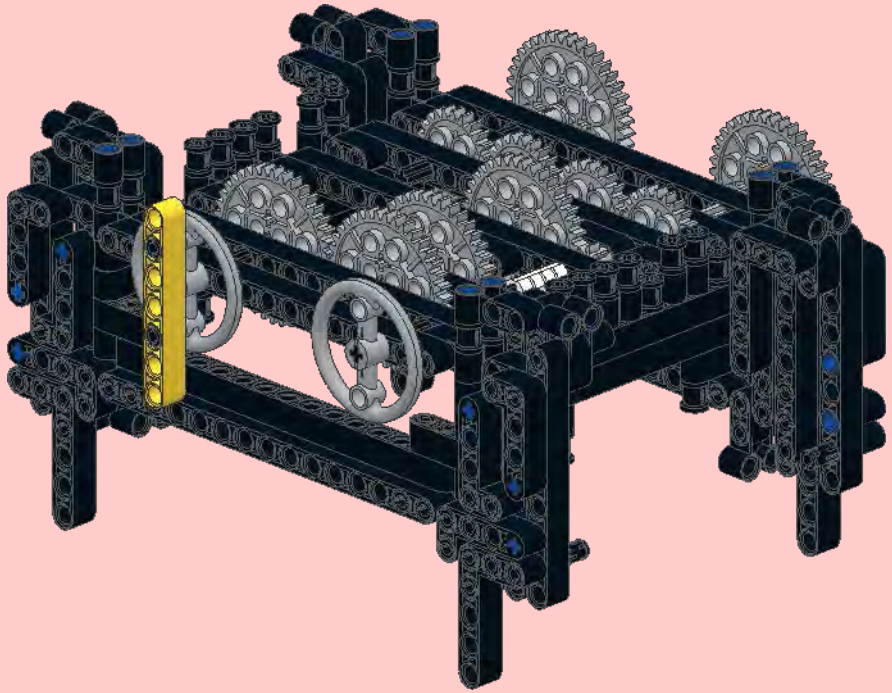

4

3x

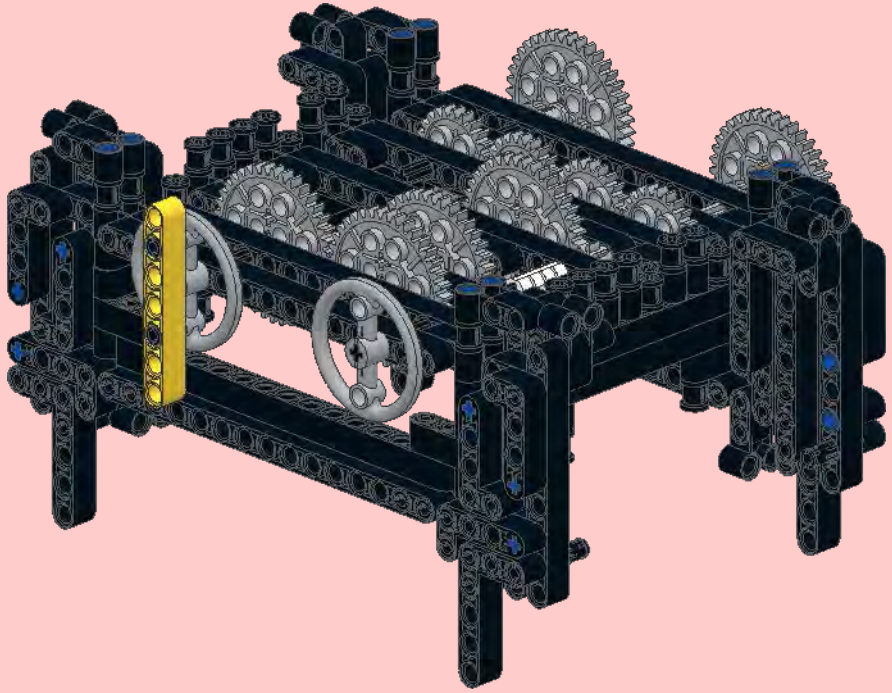

5

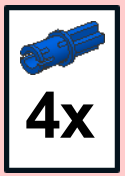


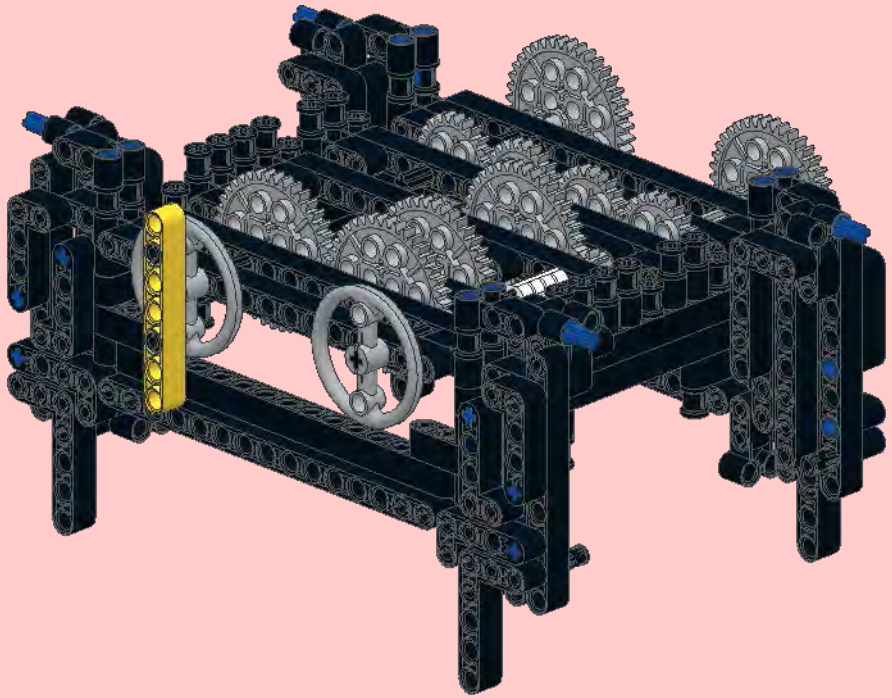

6

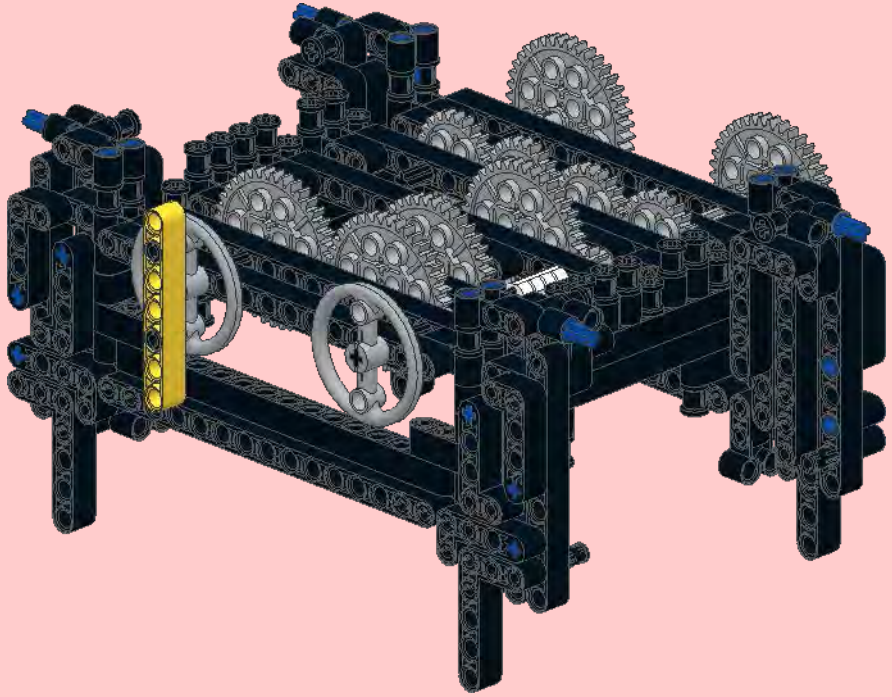

1

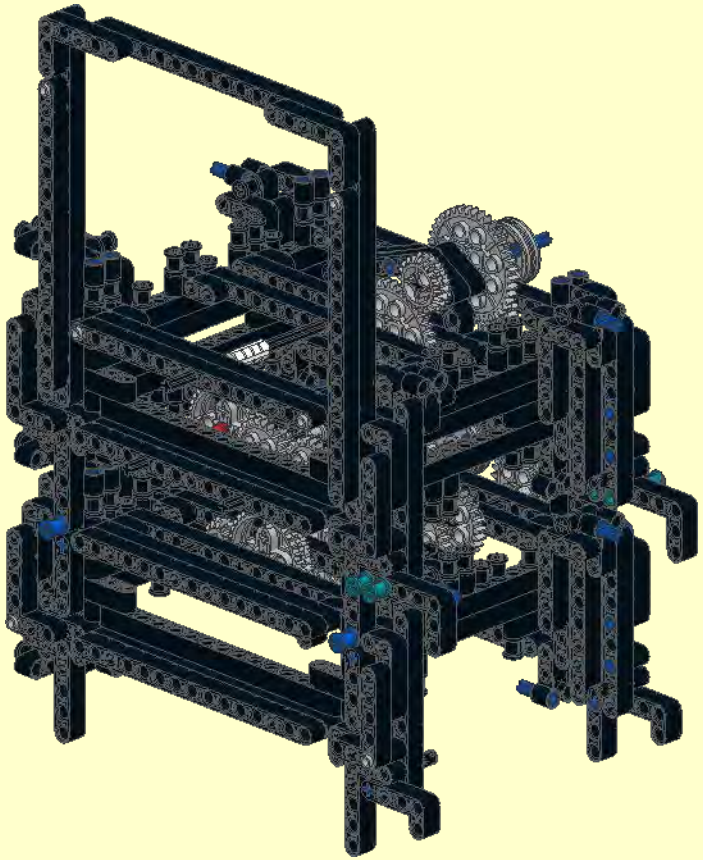

2

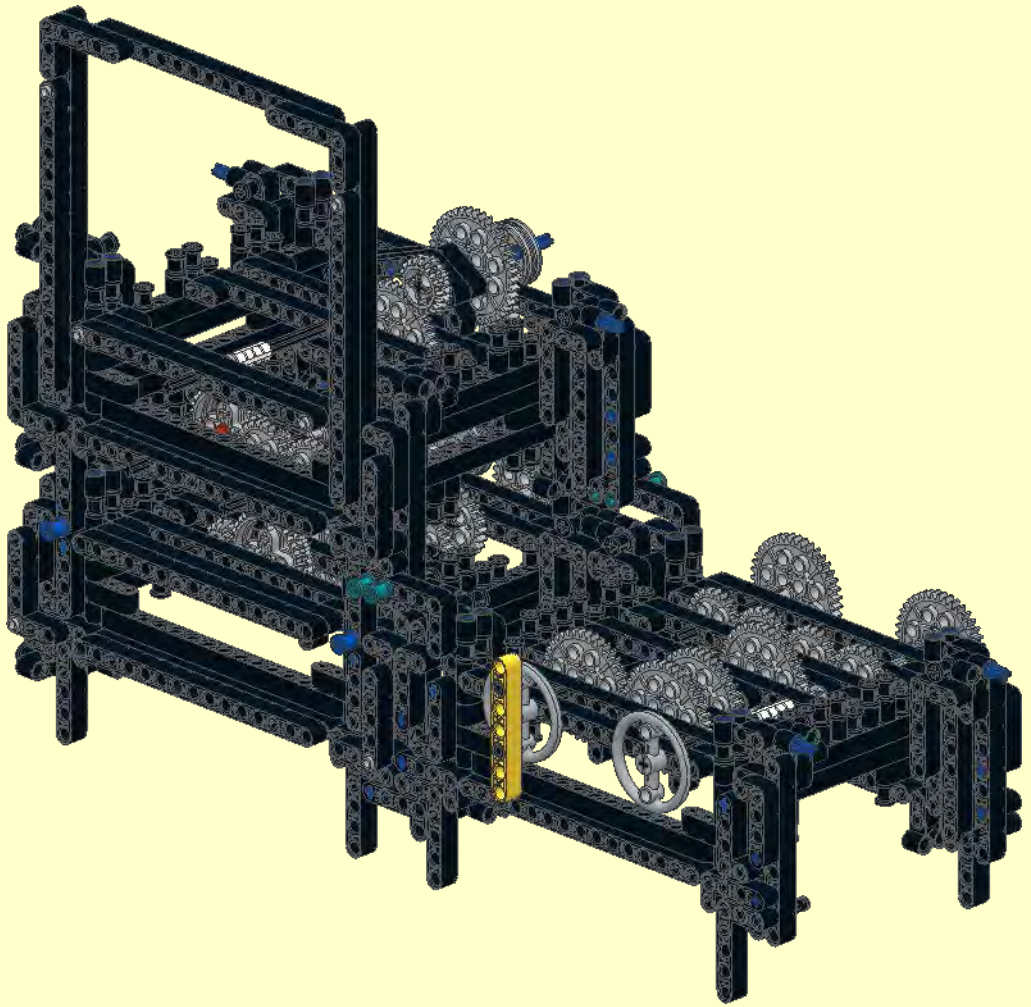

3

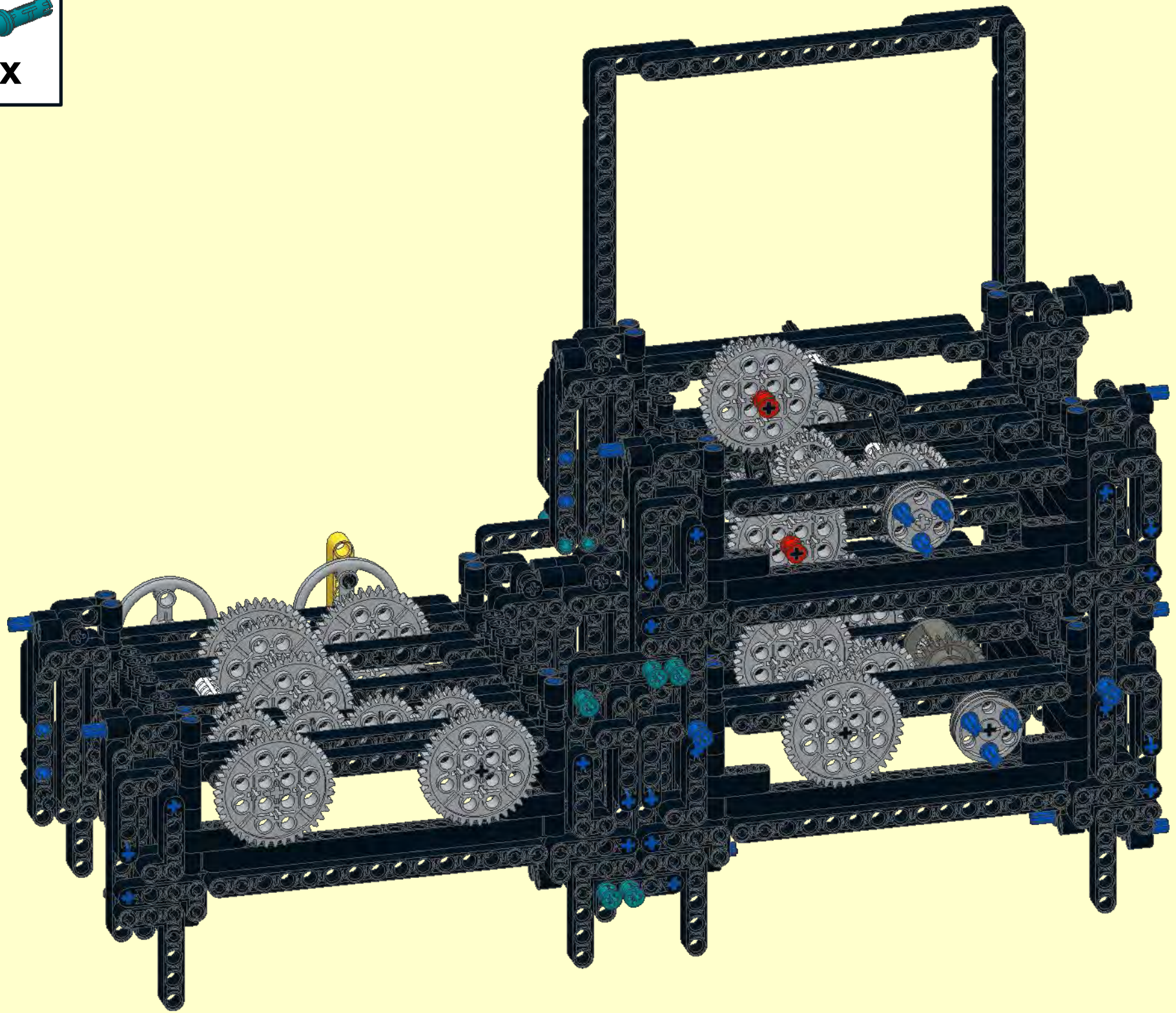

4

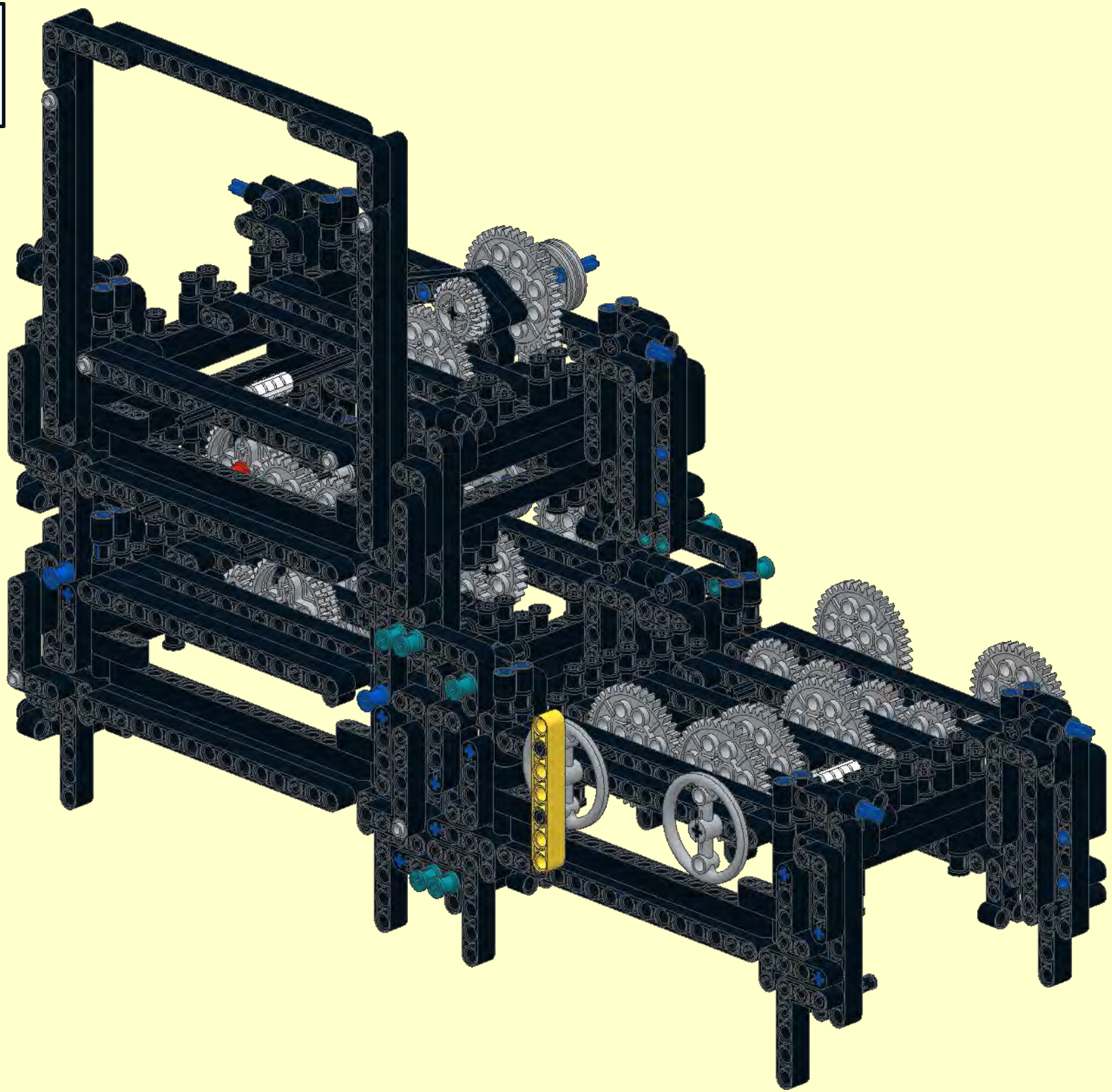

5

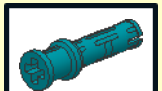

4x

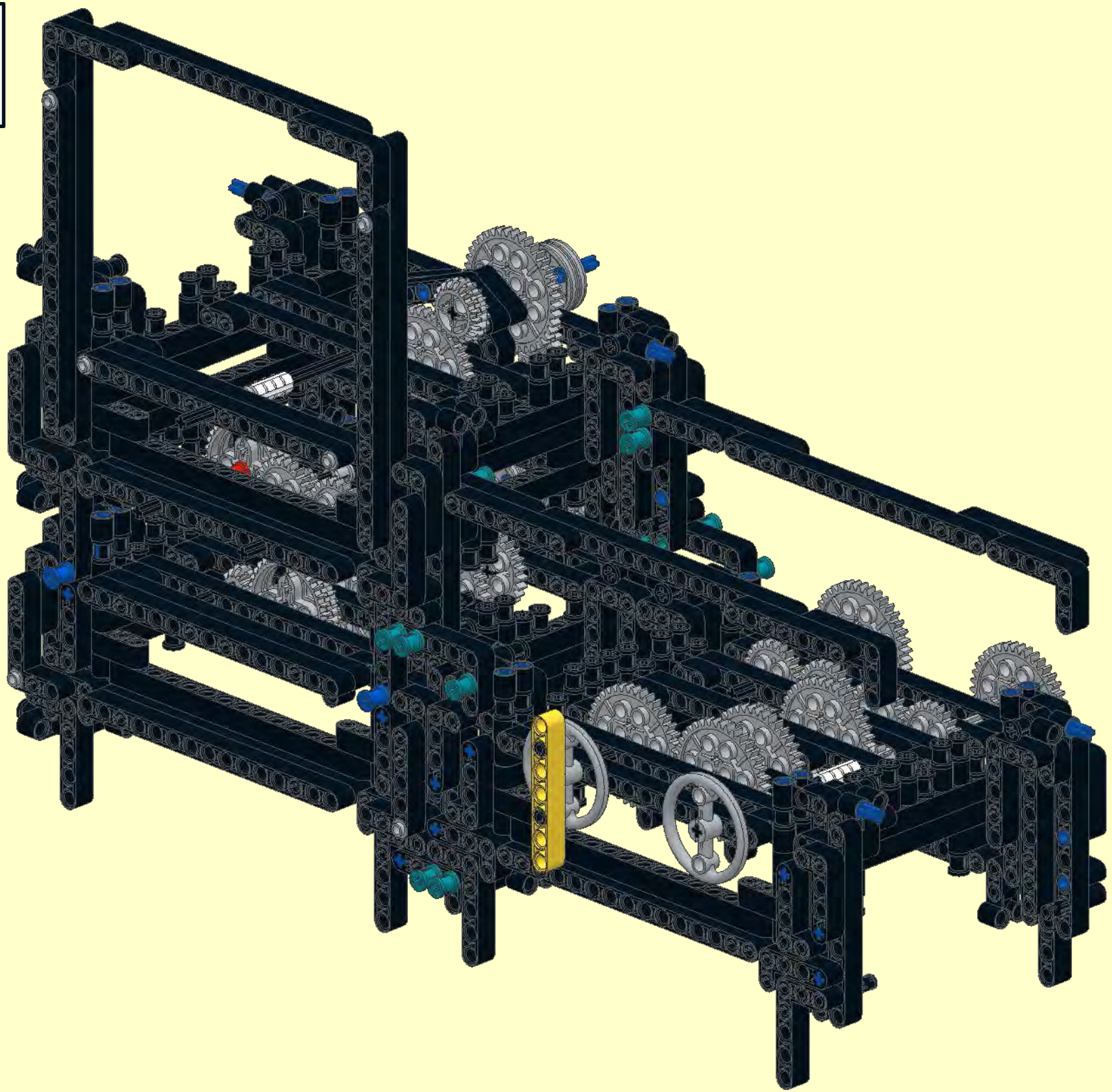

1

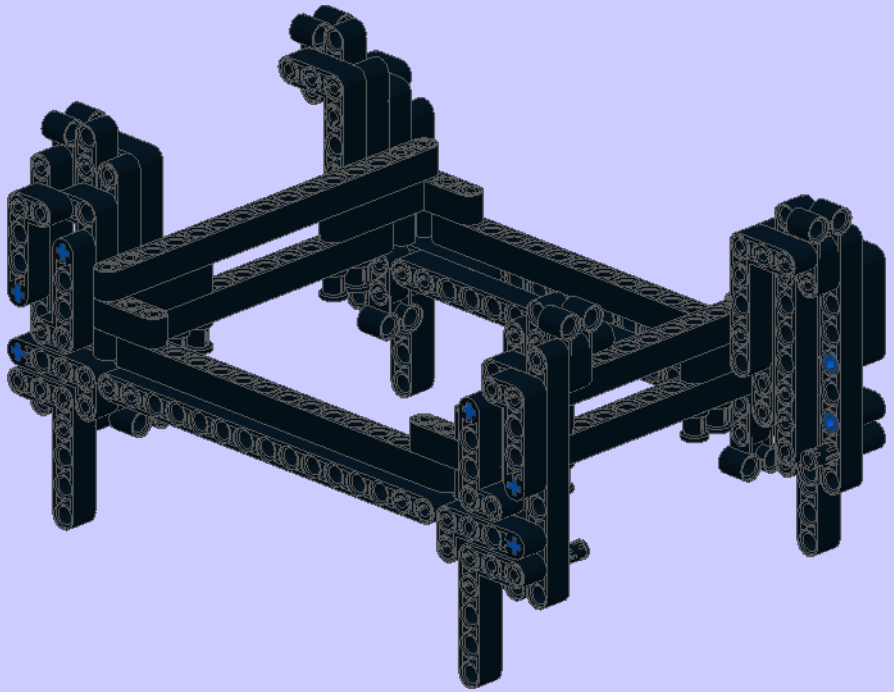

2

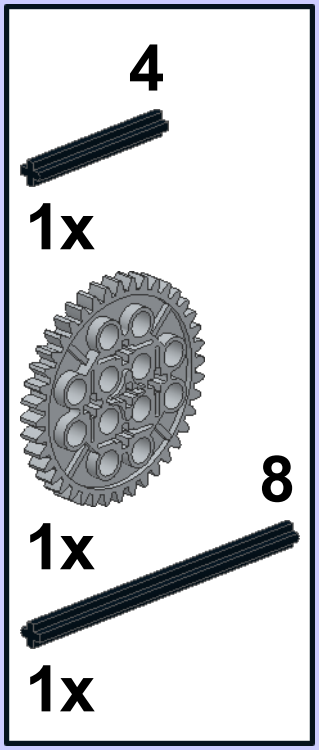


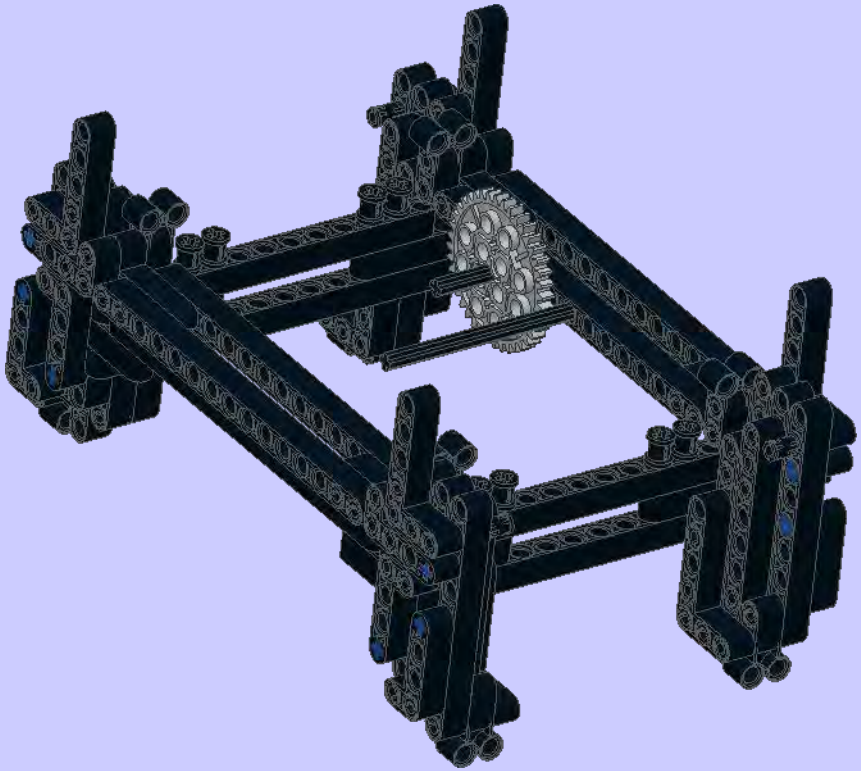

**3**

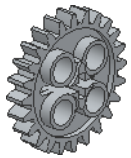

2x

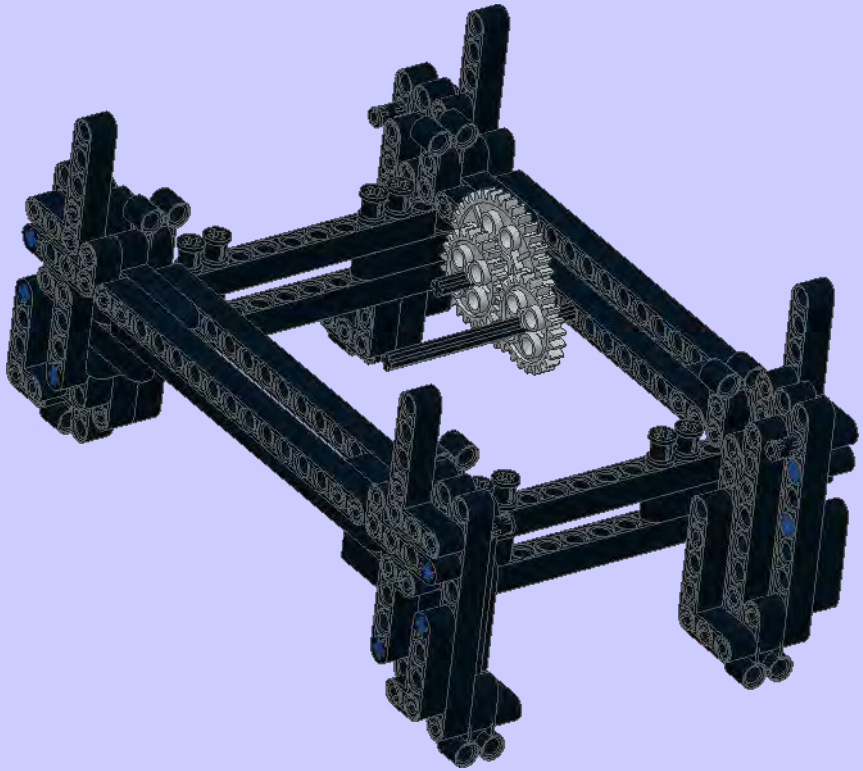

**4**

15

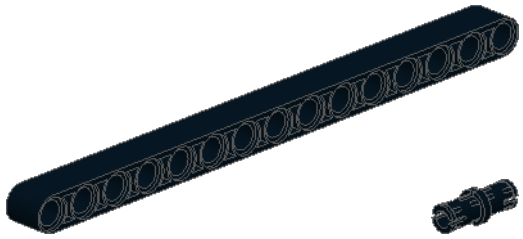

1x



4x

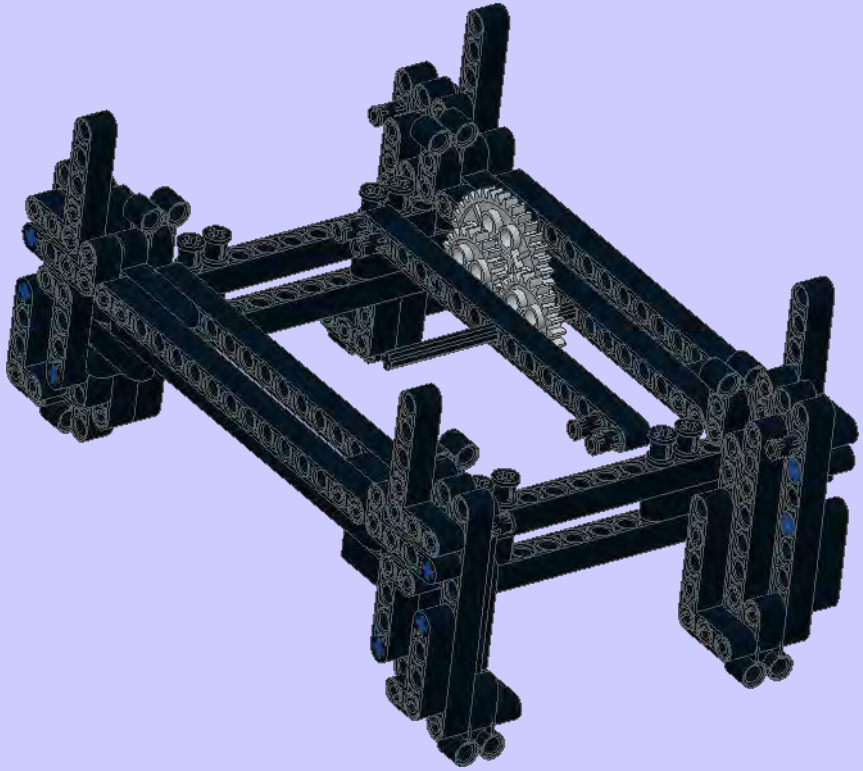

5

2x

4x

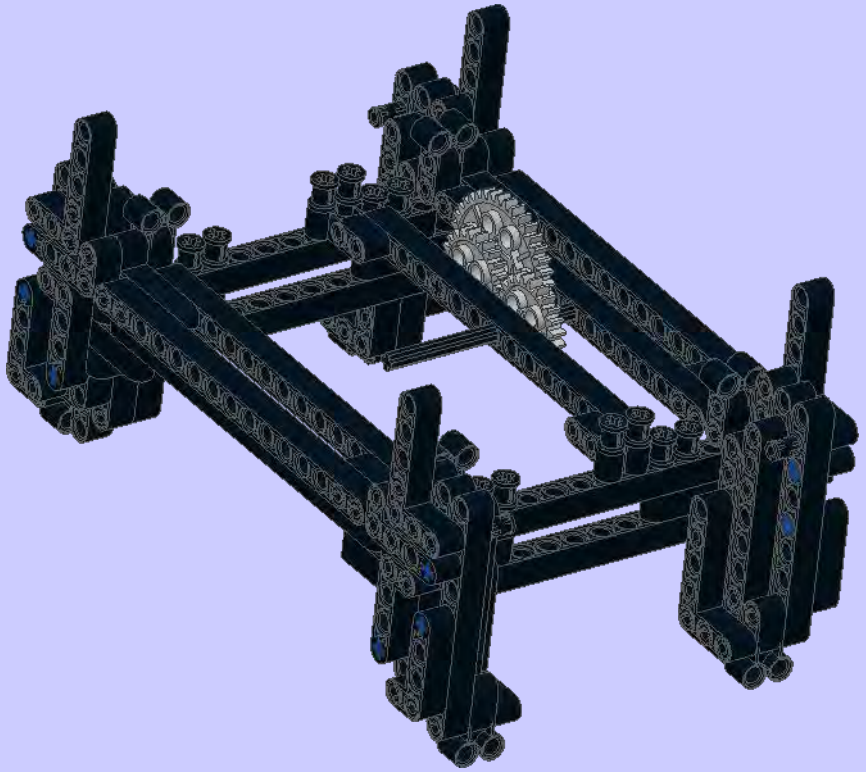

6

7

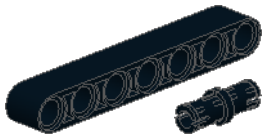

1x

2x

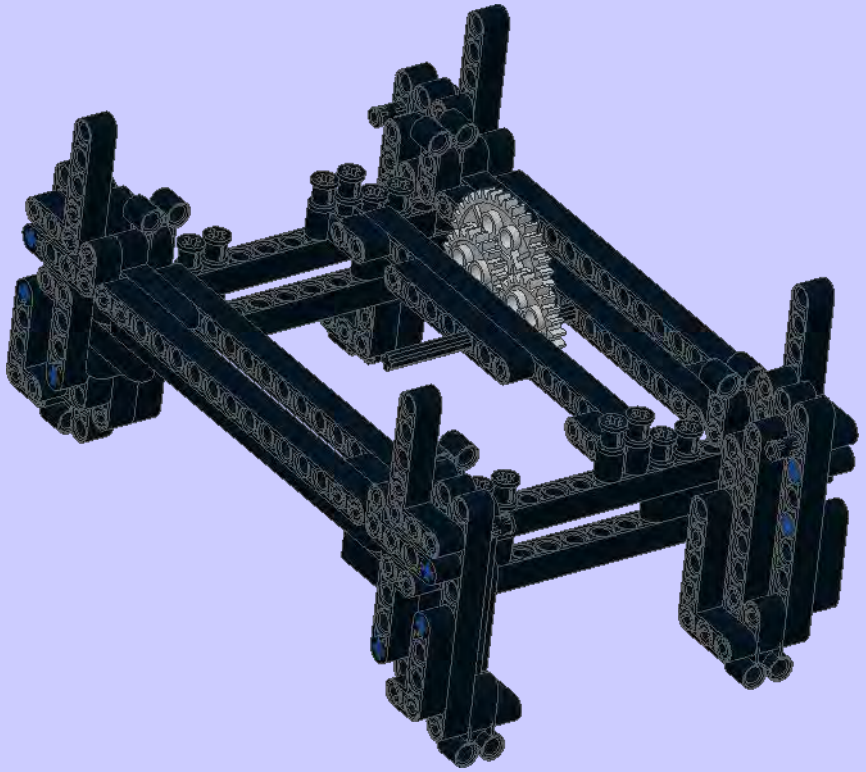

7

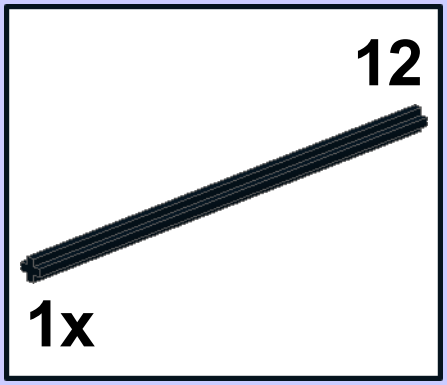


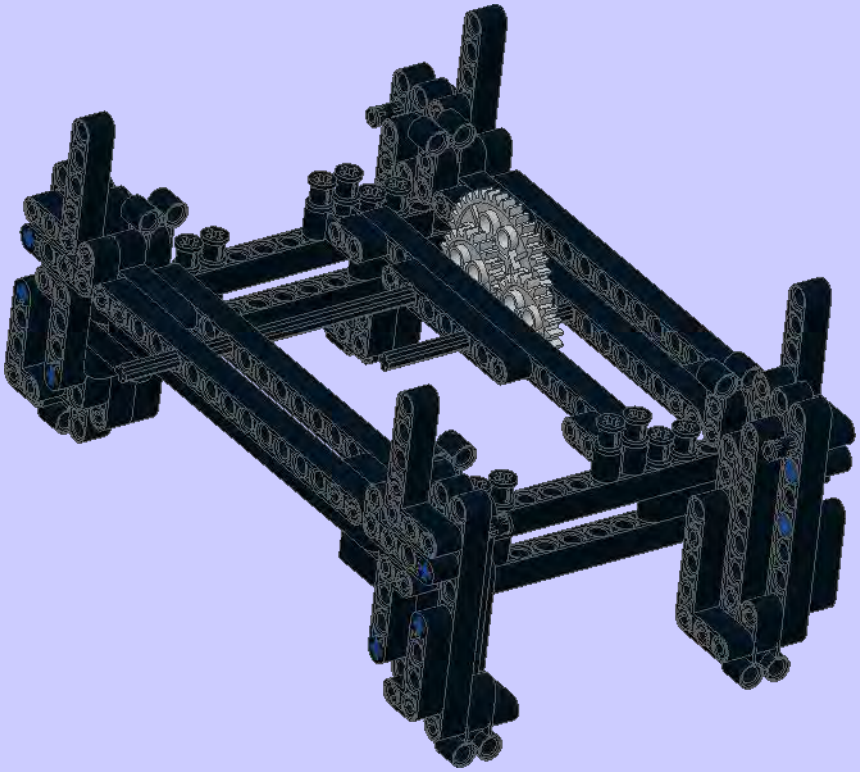

8

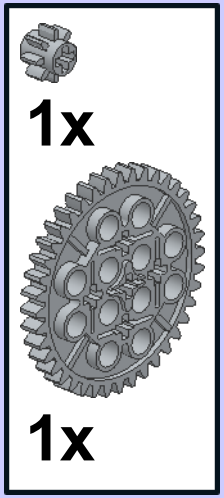


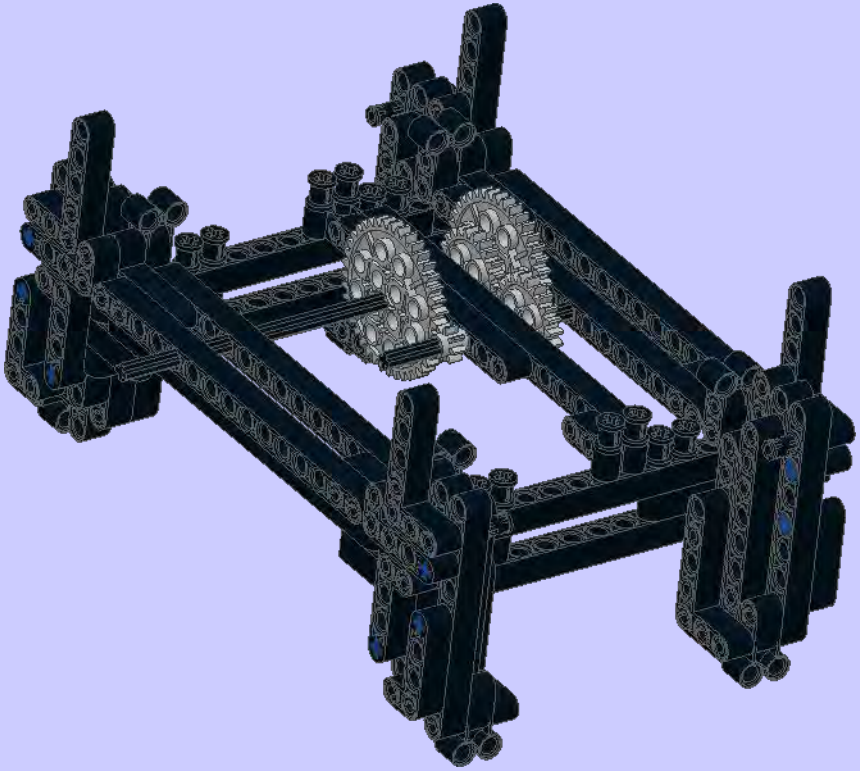

**9**

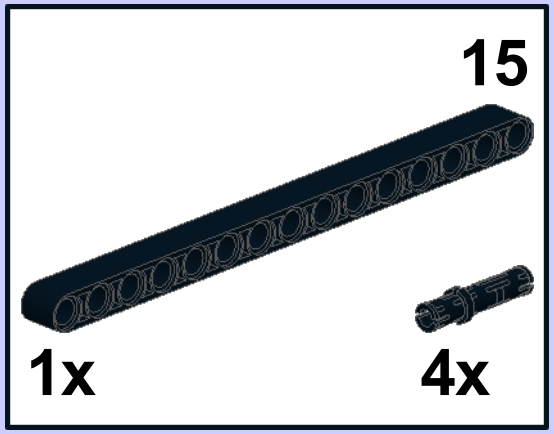


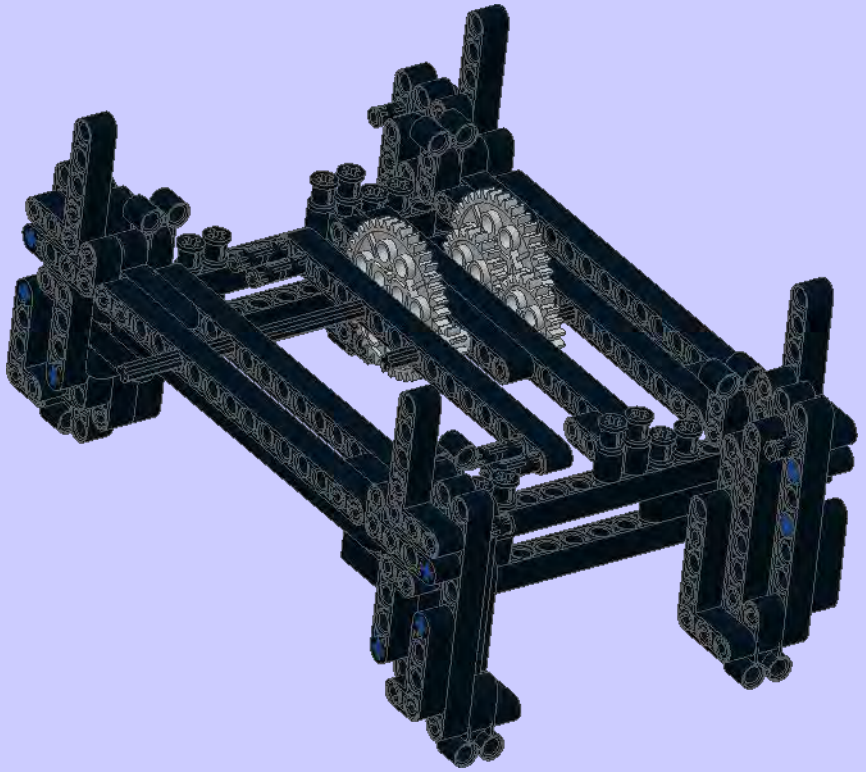

**10**

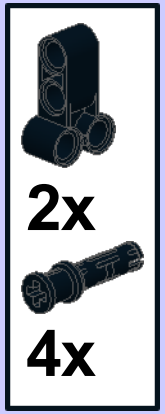


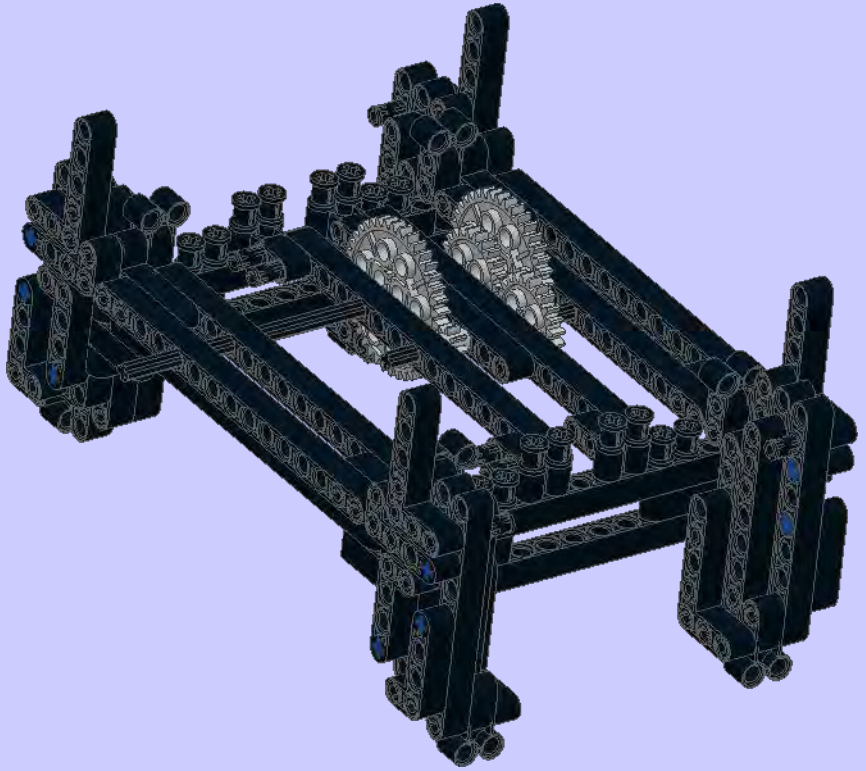

## 11

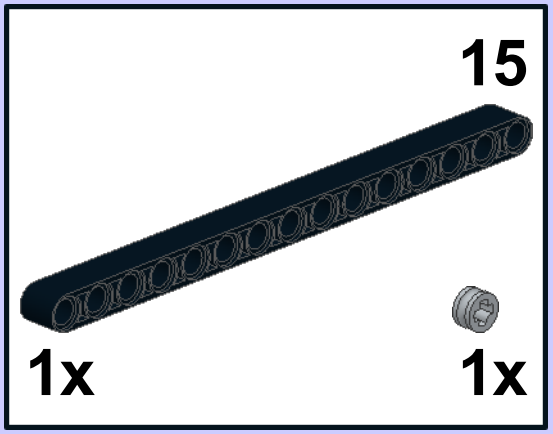


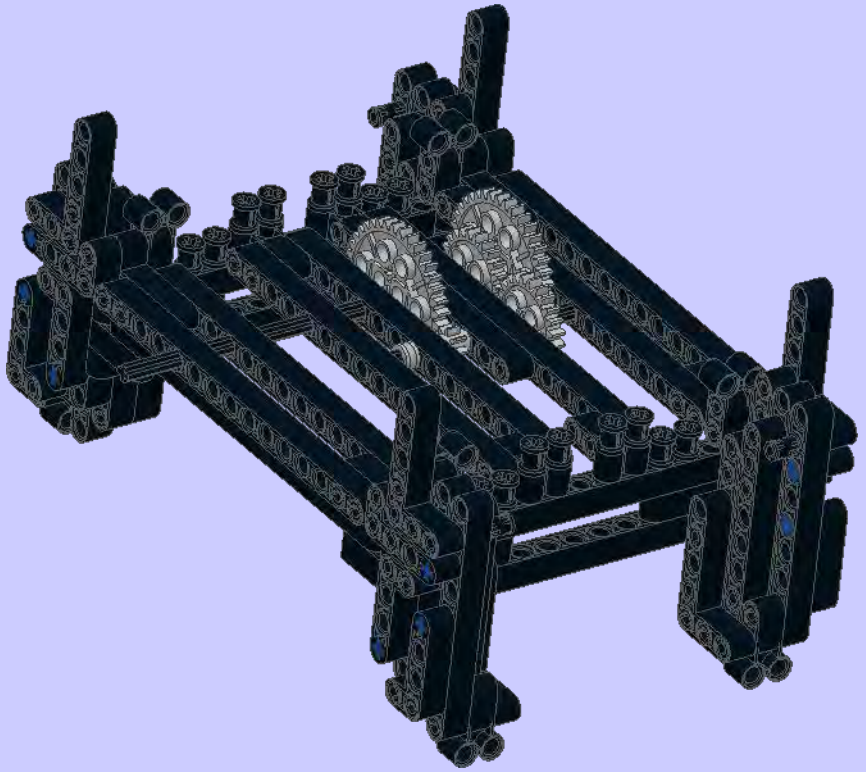

## 12

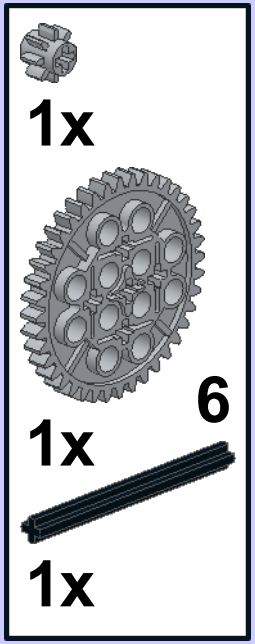


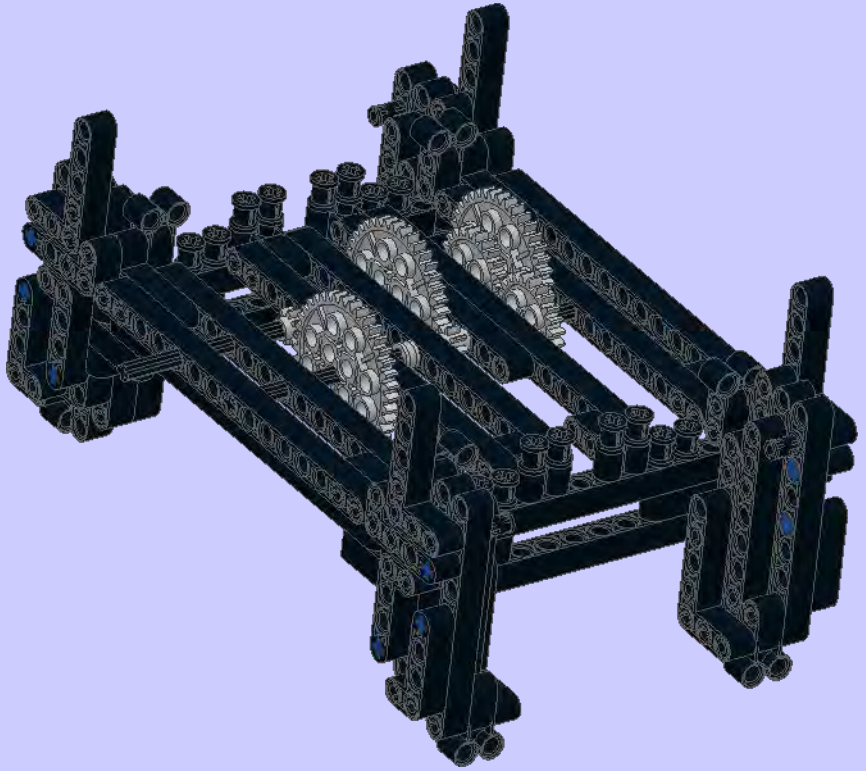

13

1x

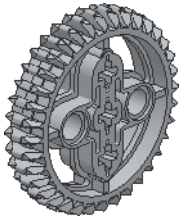

1x

8

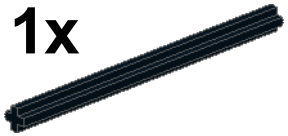

1x

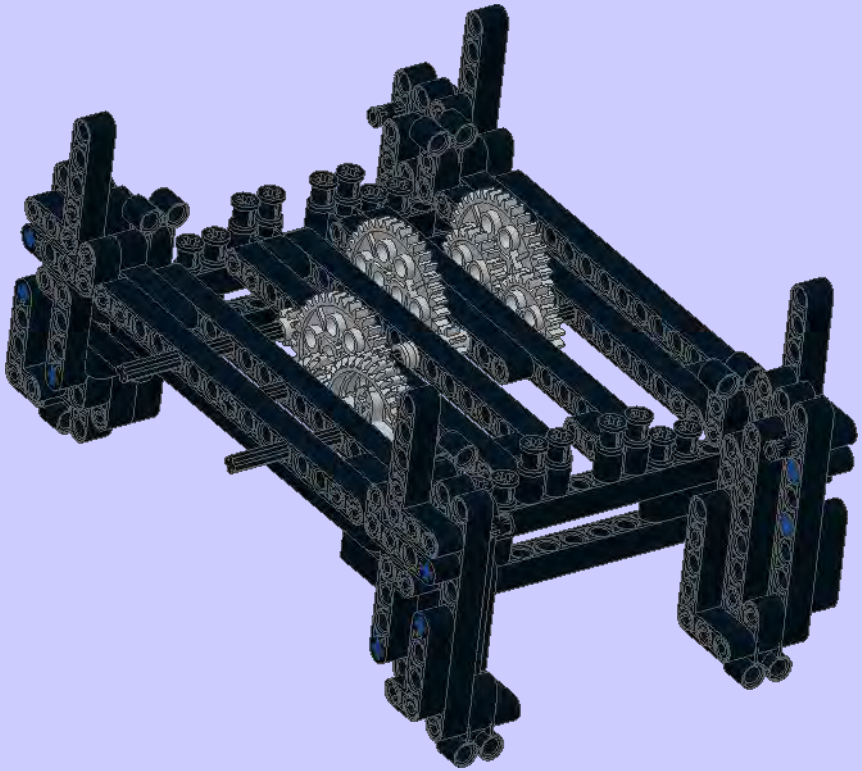

14

2x

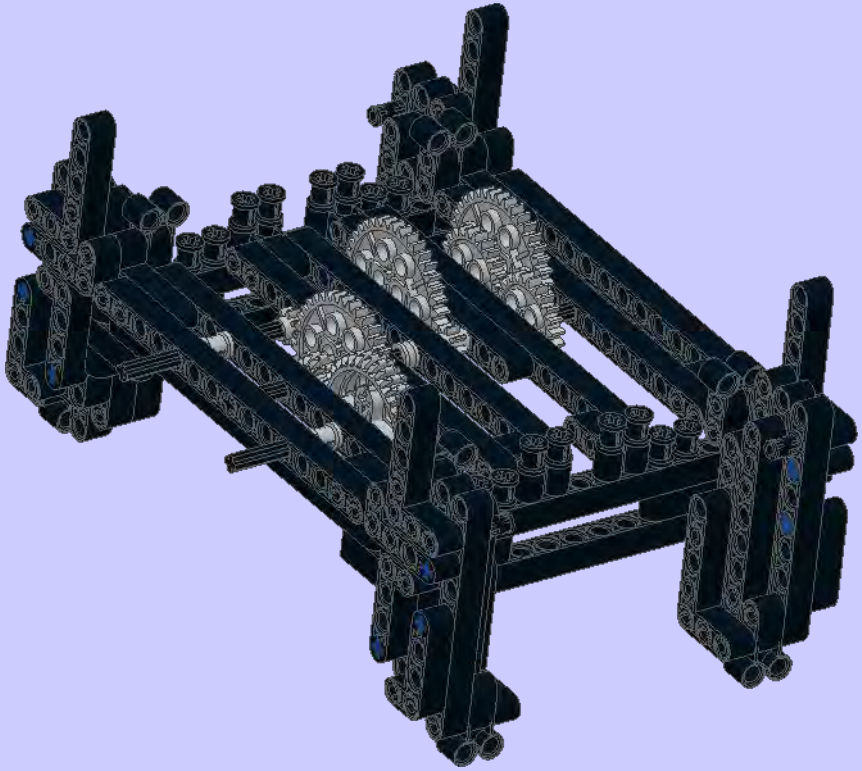

15

2x

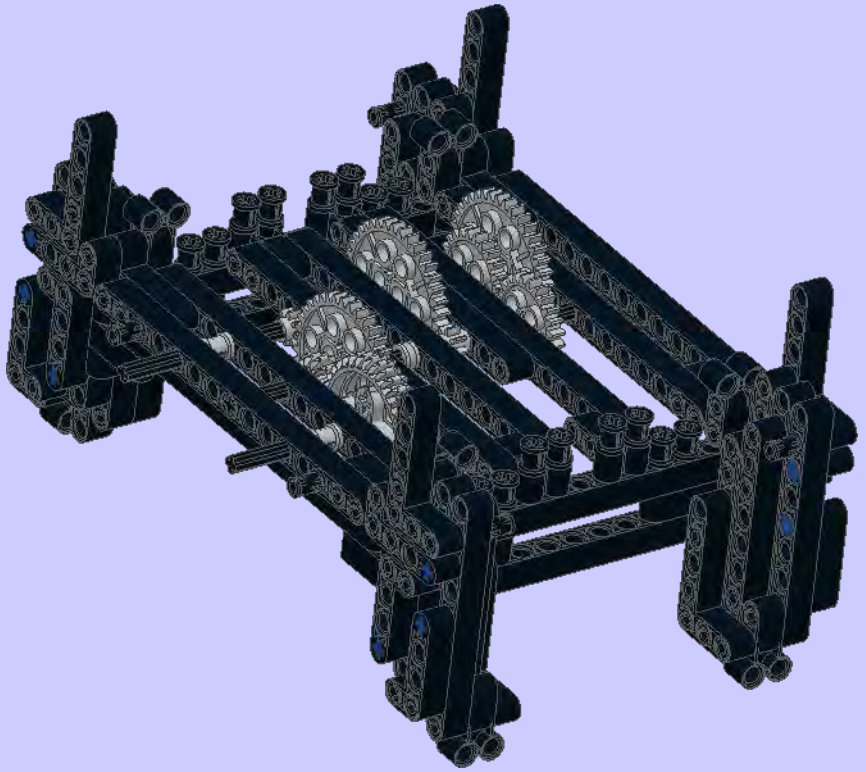

16

15

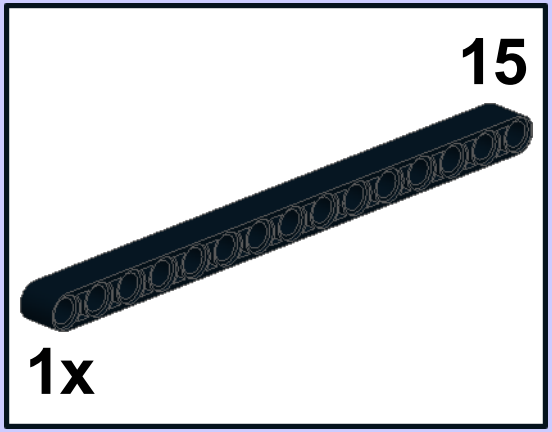

1x

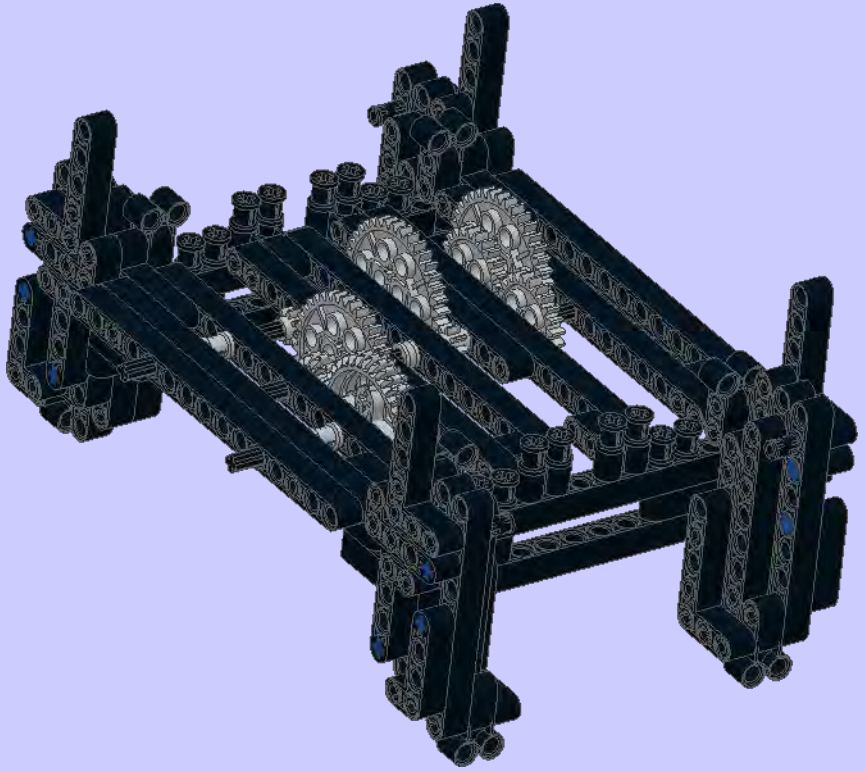

17

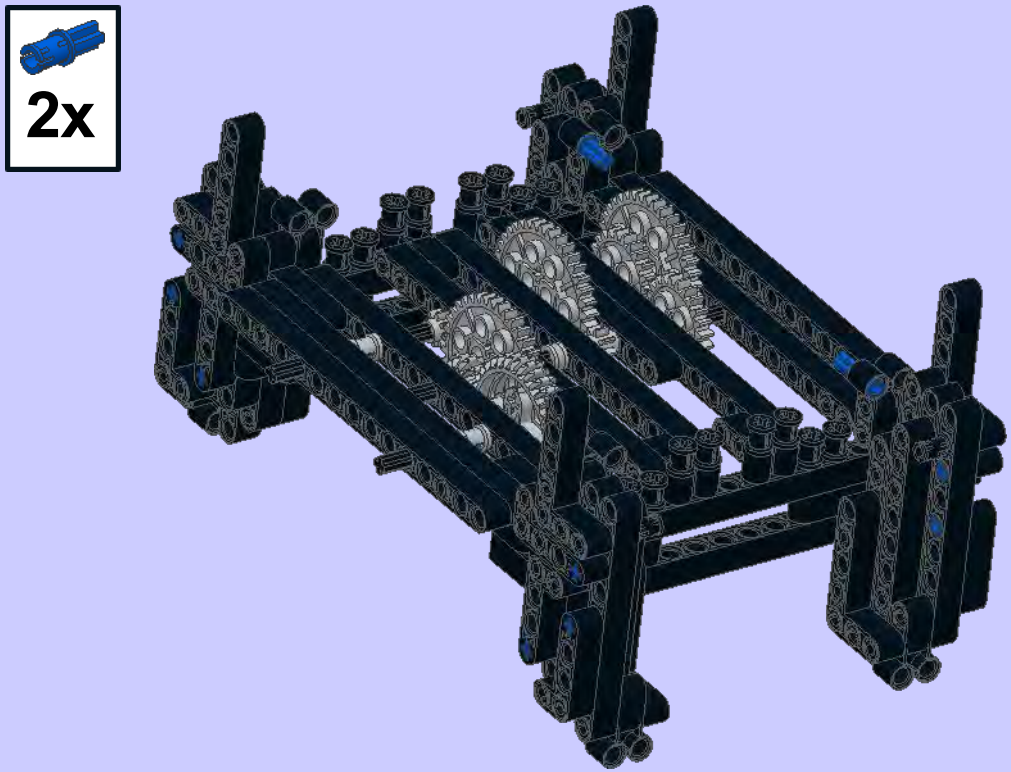

18

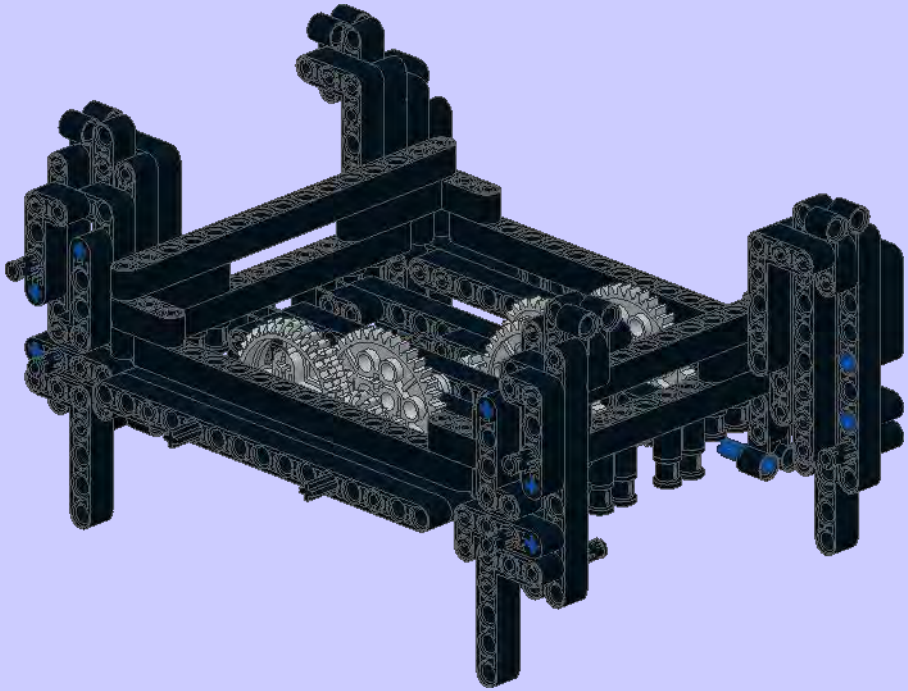

19

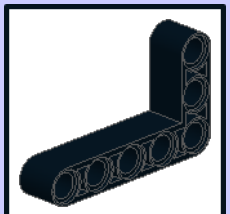

2x

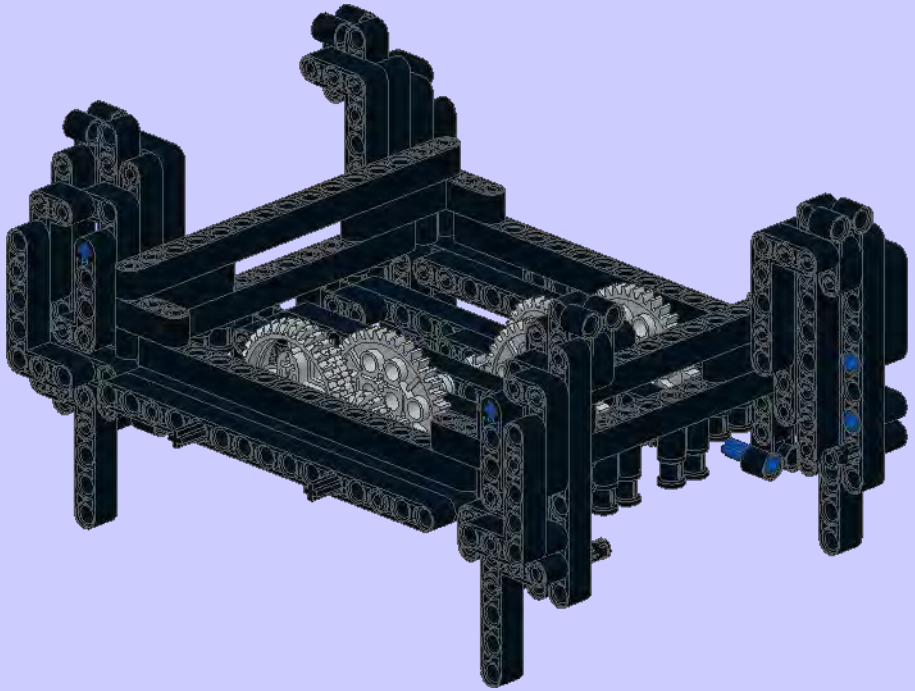

20

2x

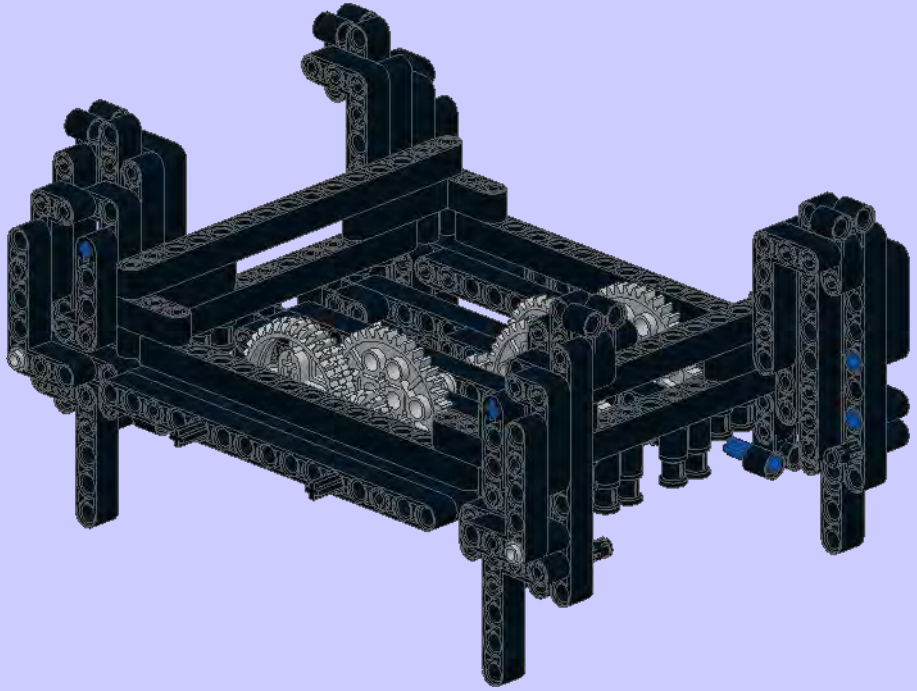

21

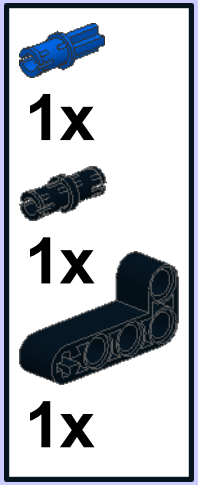


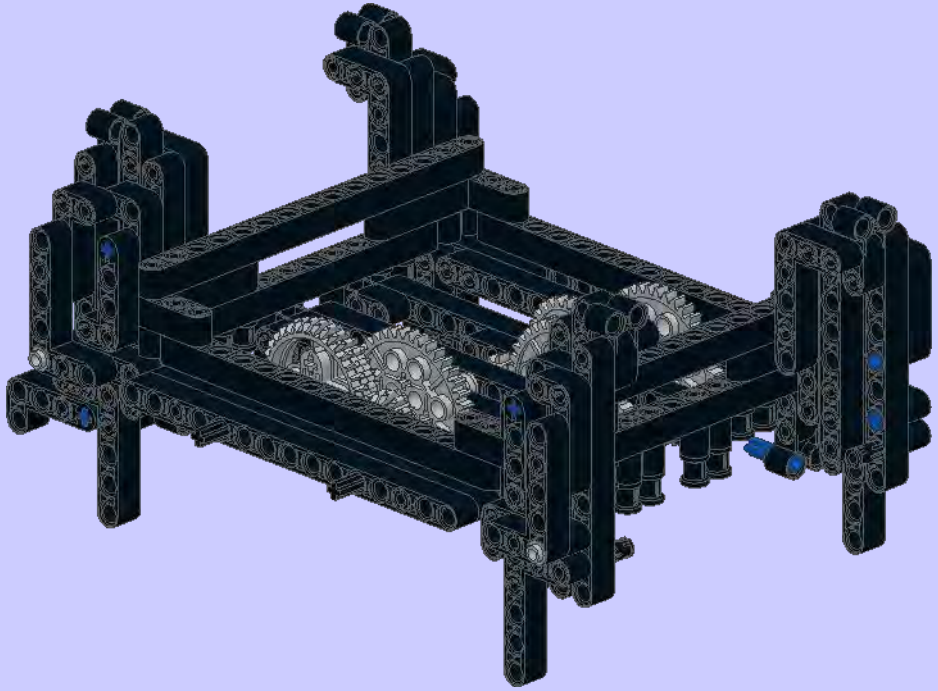

22

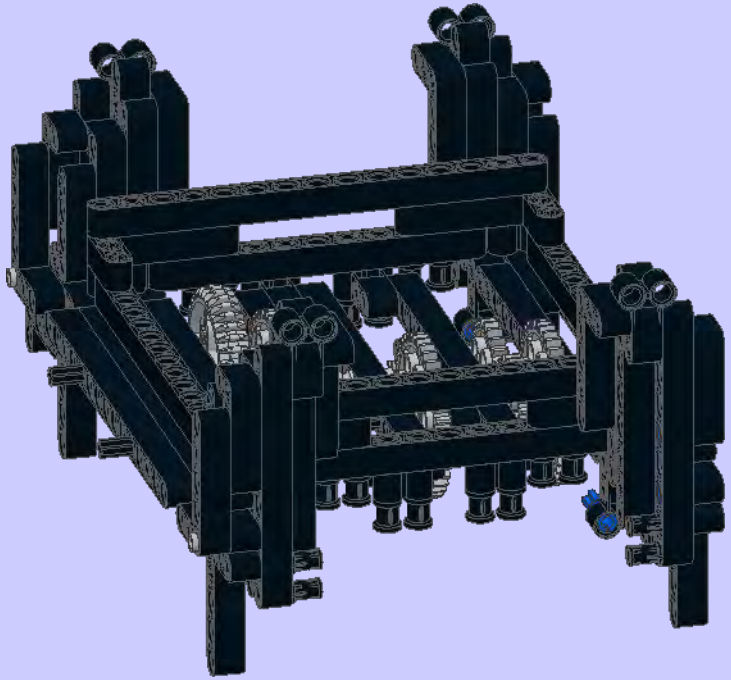

23

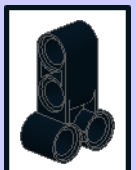

2x

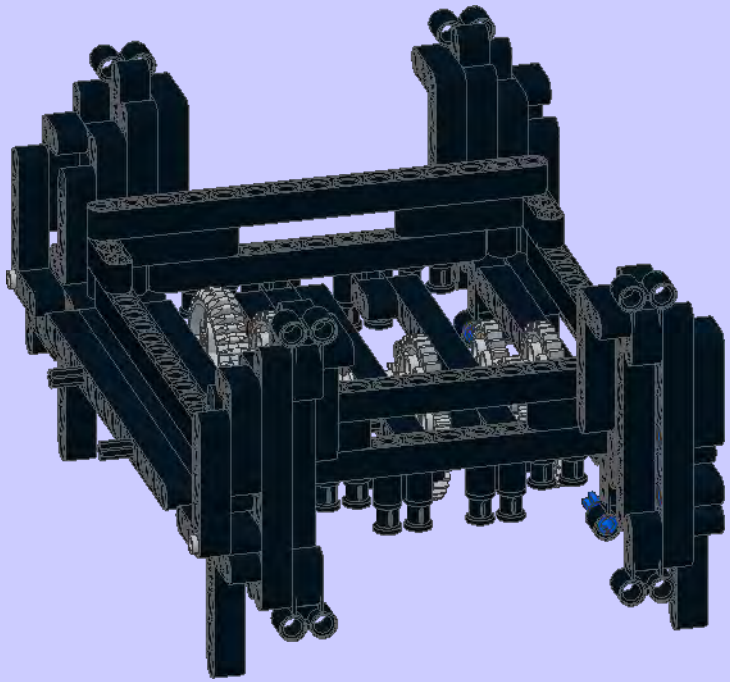

24

2x

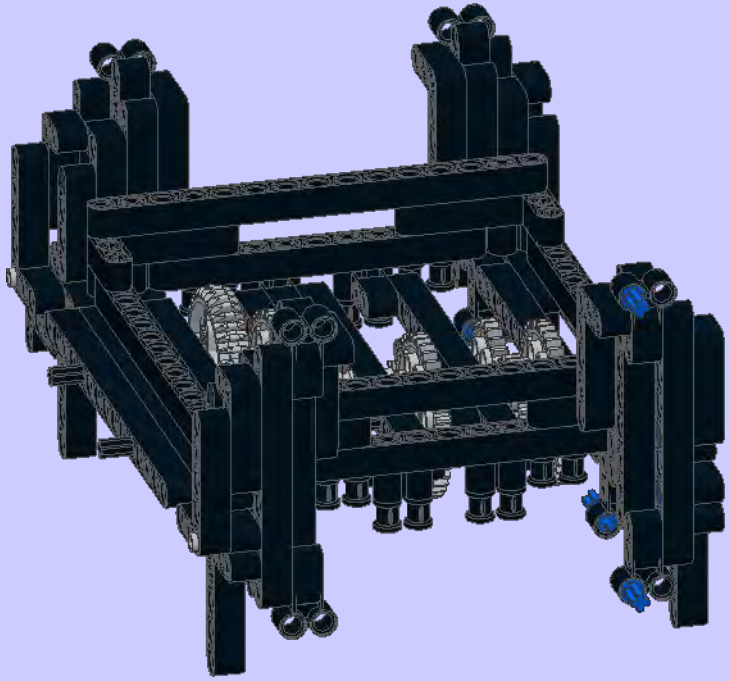

25

4x

3

2x

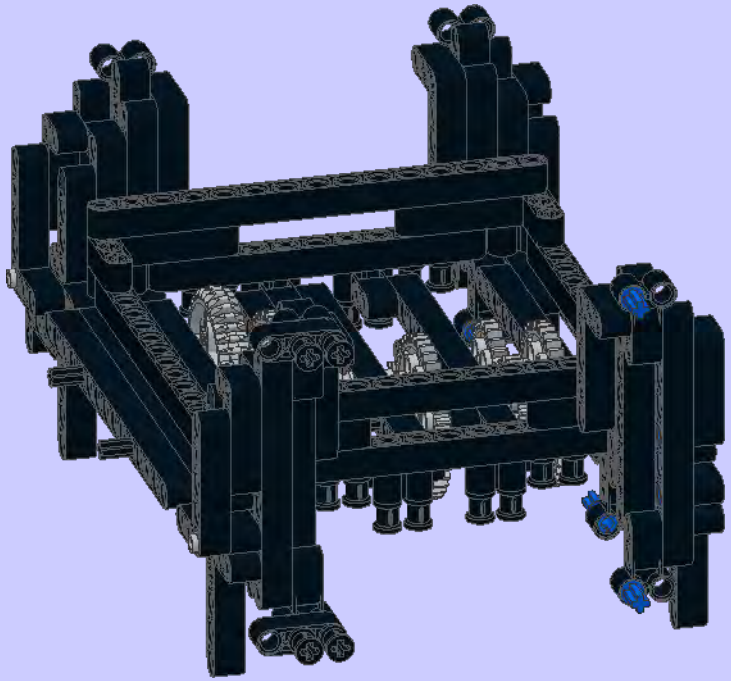

26

1x

1x

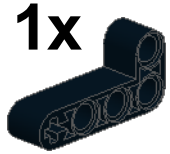

1x

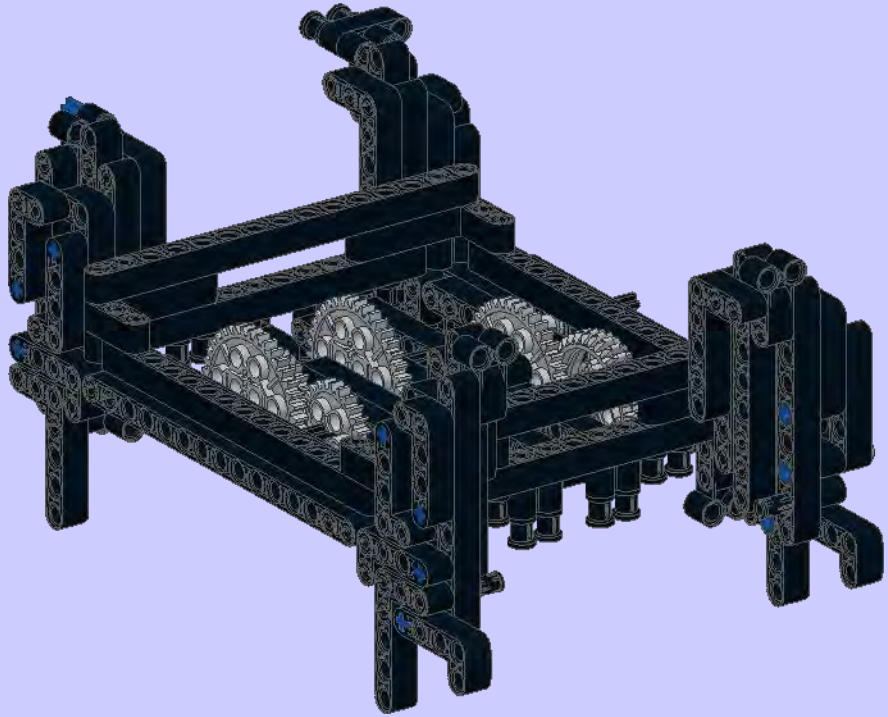

1

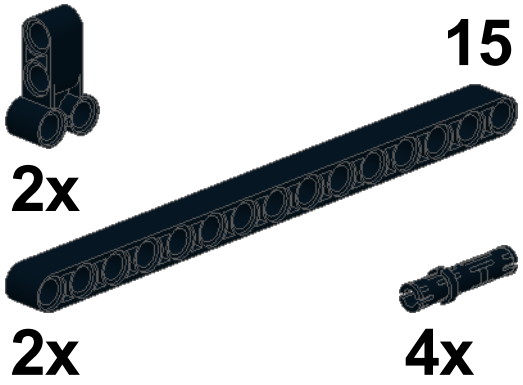


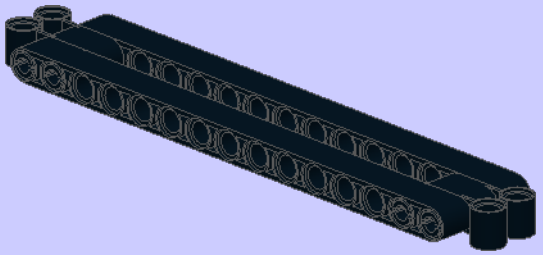

2

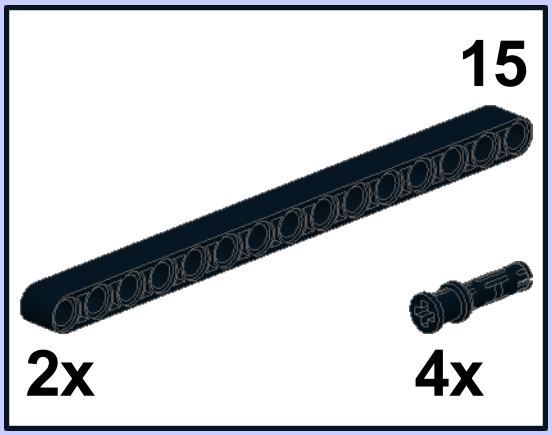


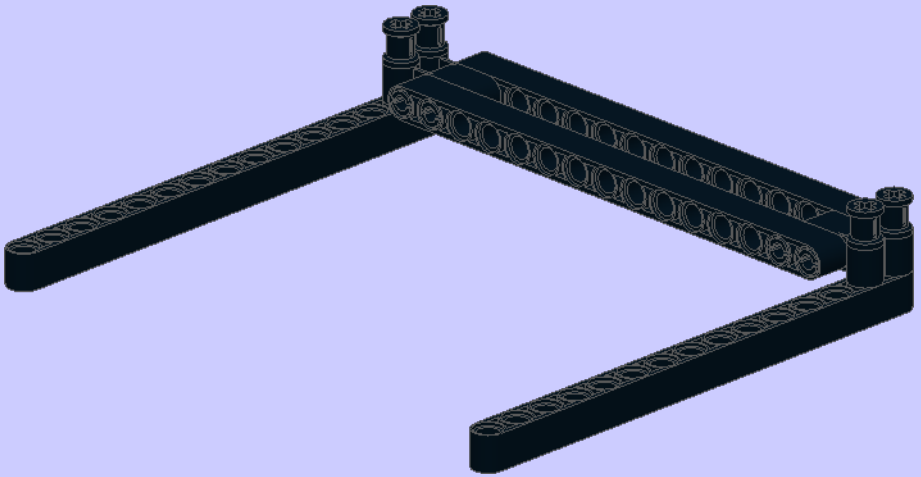

3

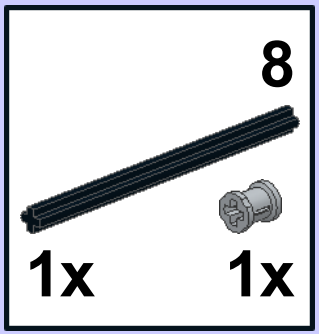


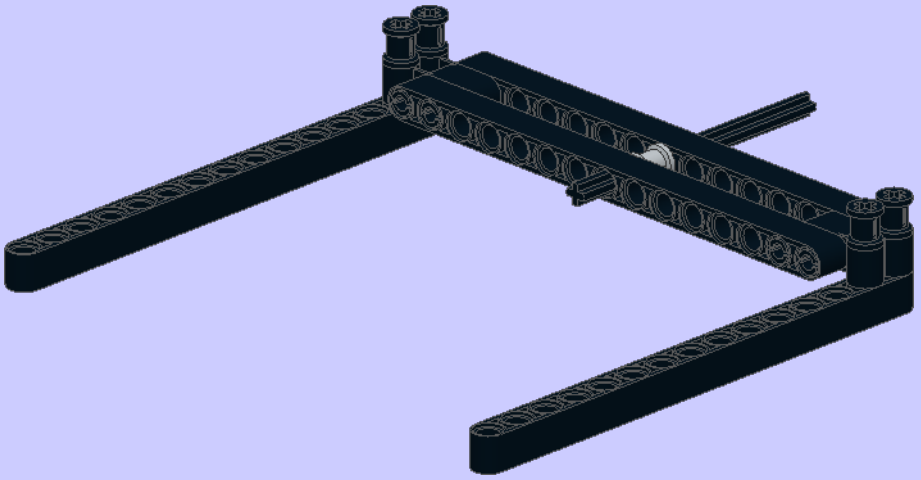

**4**

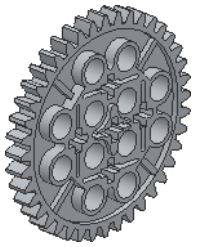

2x

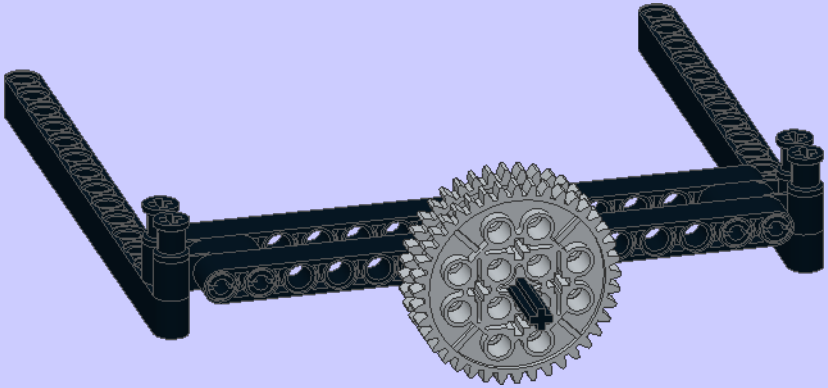

**5**

3x

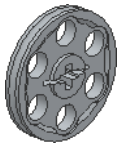

2x

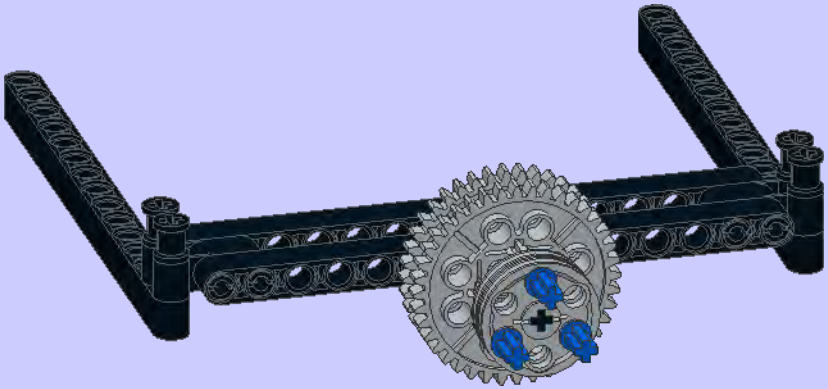

**6**



4x

15

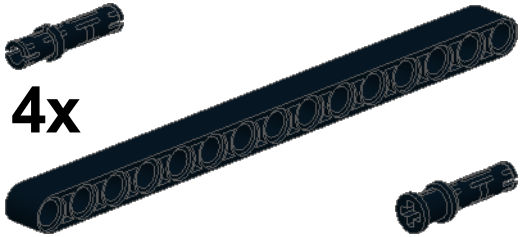

1x



4x

2x

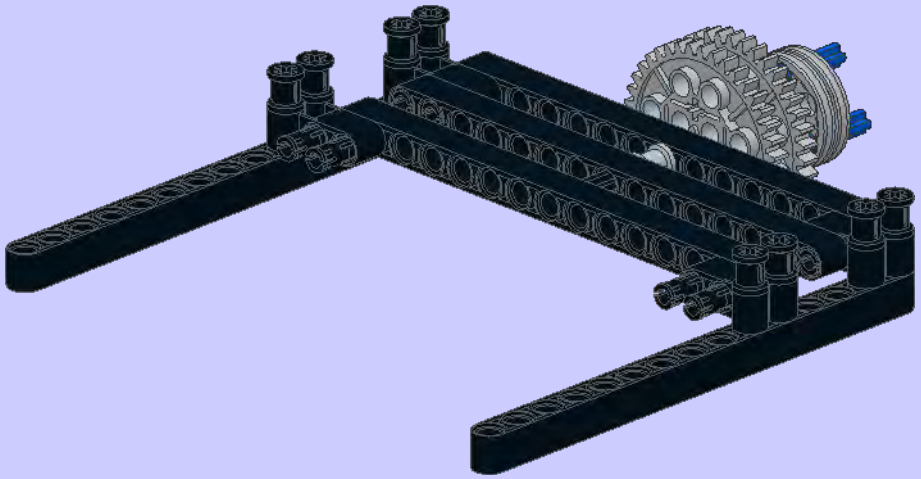

7

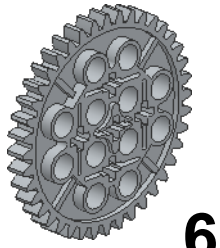

1x

6

1x

5

1x

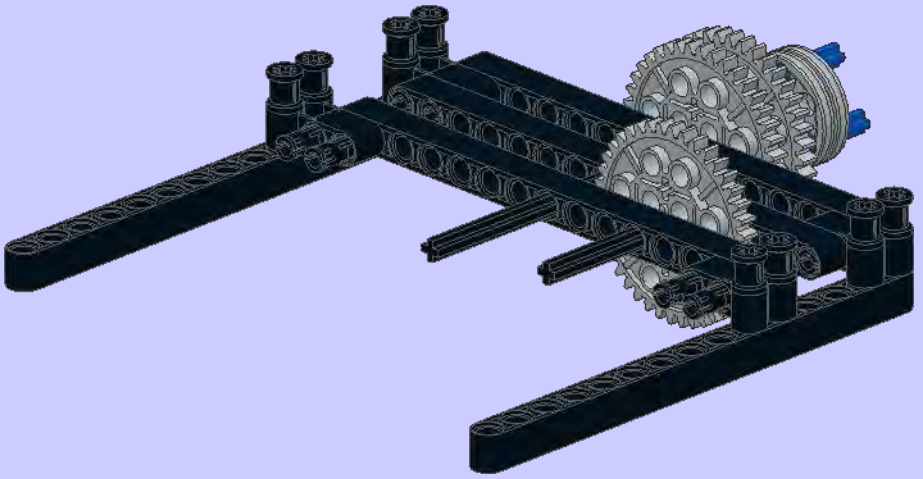

8

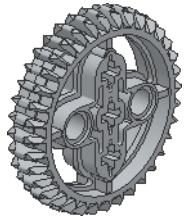

1x

12

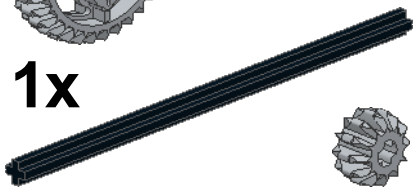

1x



1x

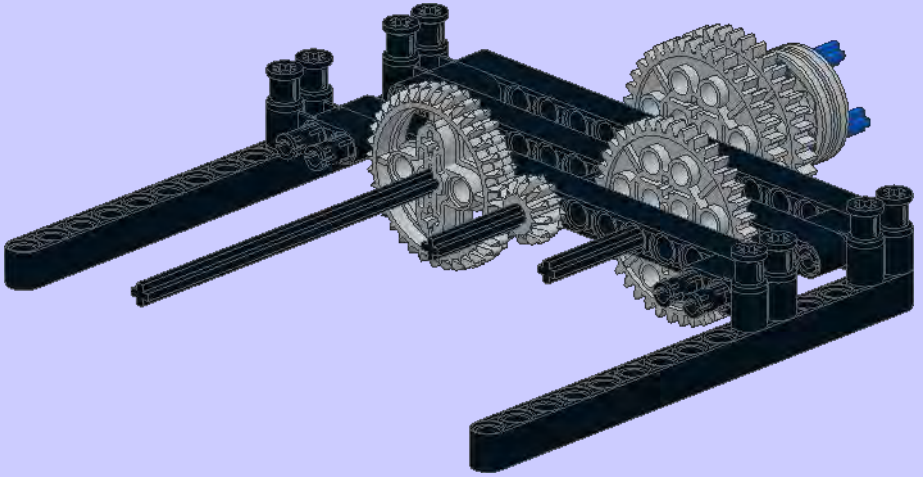

9

15

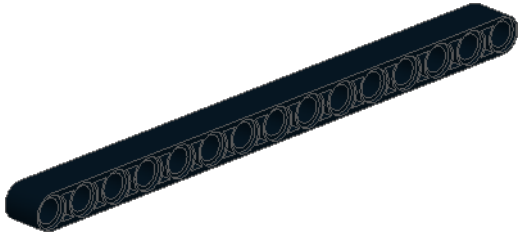

1x

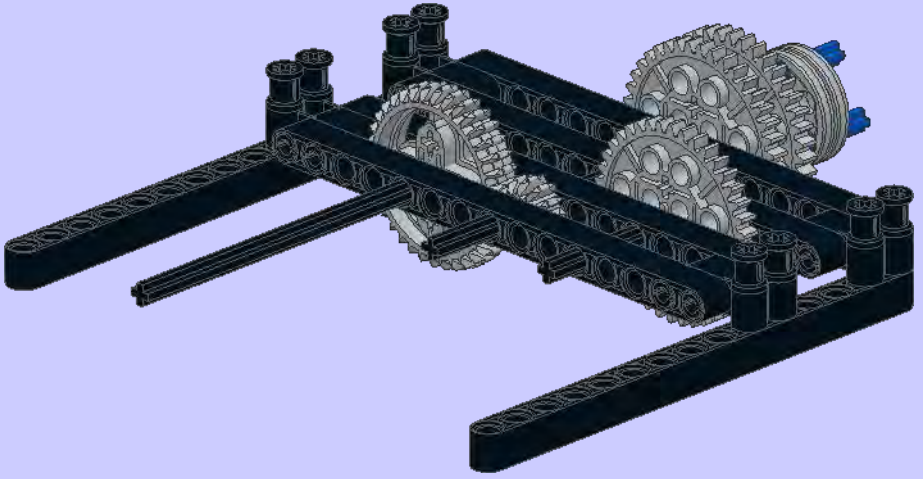

## 10

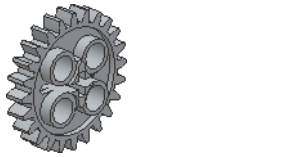

1x

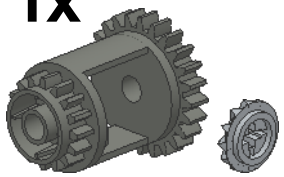

1x



2x

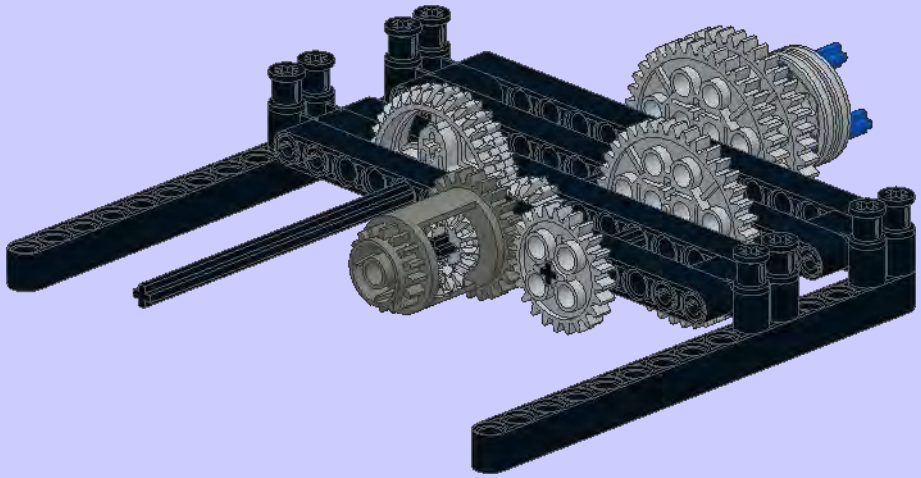

## 11

2x

15

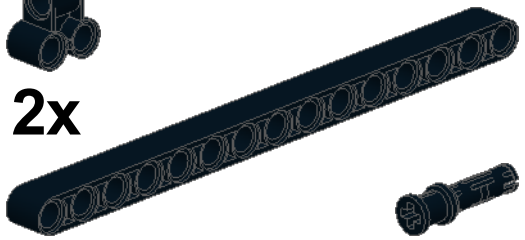

1x



4x

4x

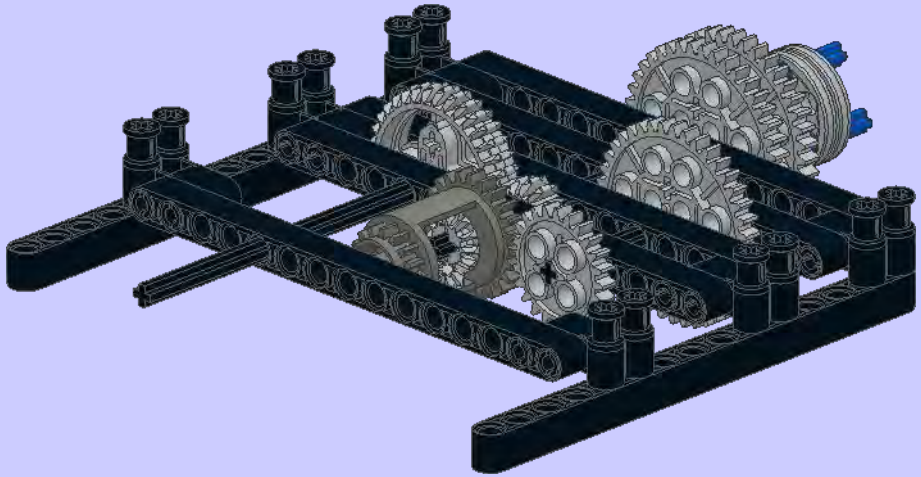

## 12

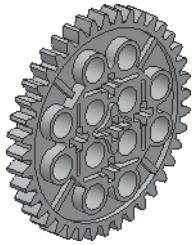

1x

8

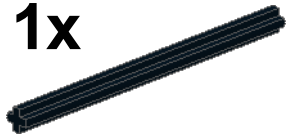

1x

15

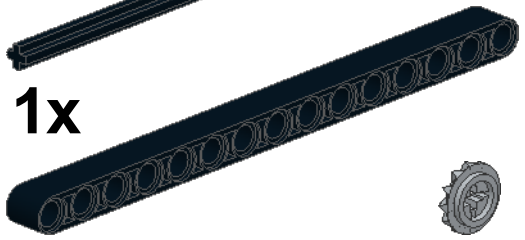

1x



1x

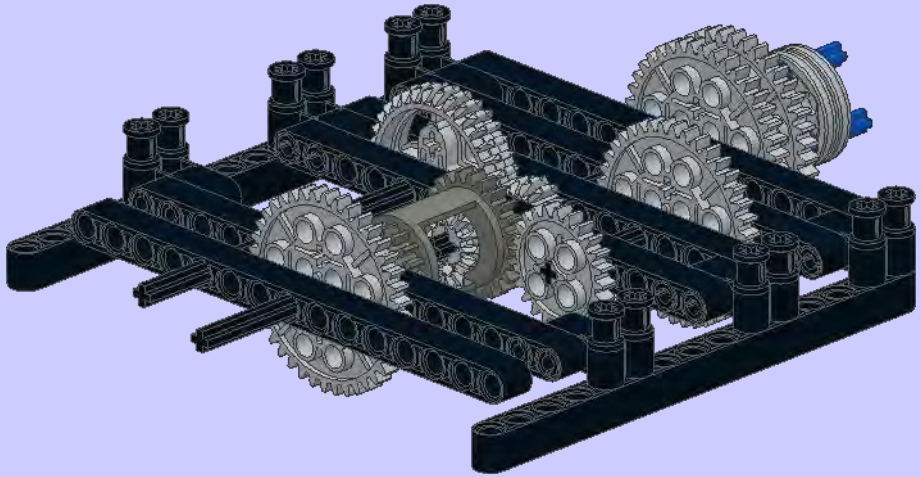

13

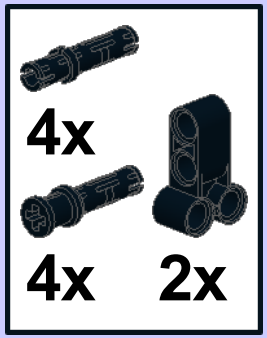


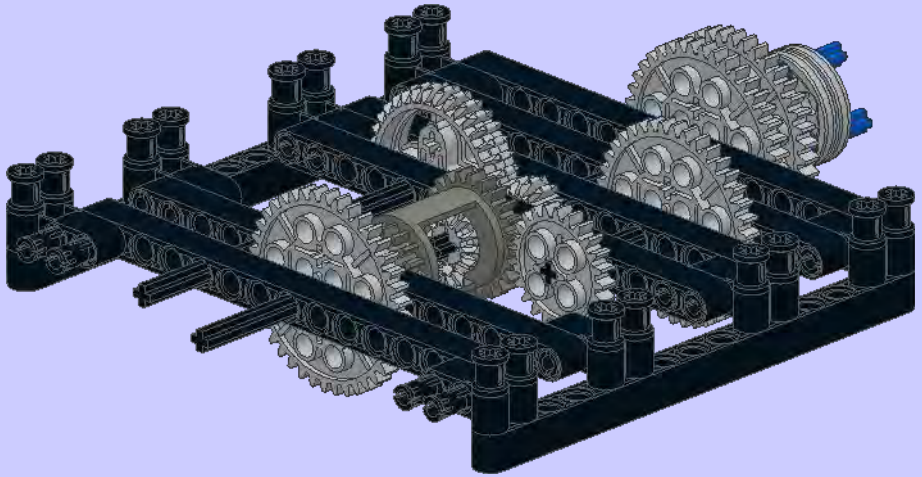

14

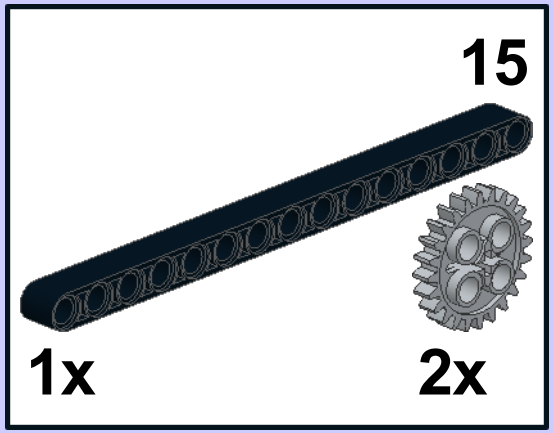


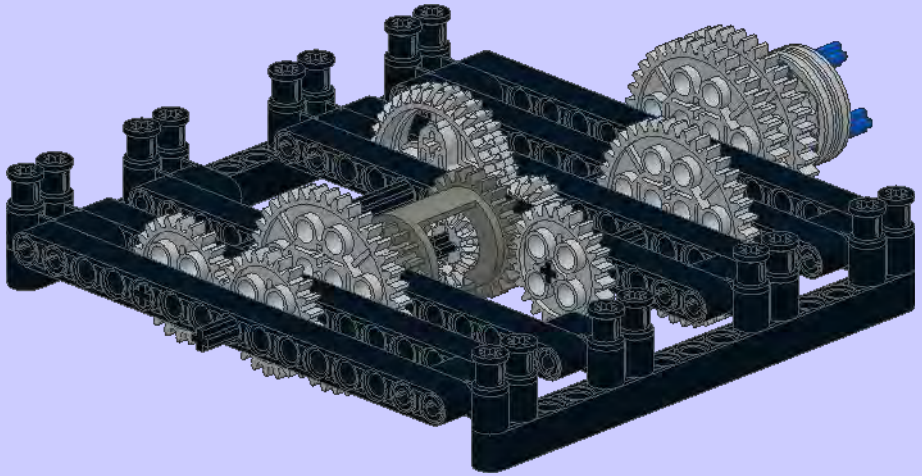

15

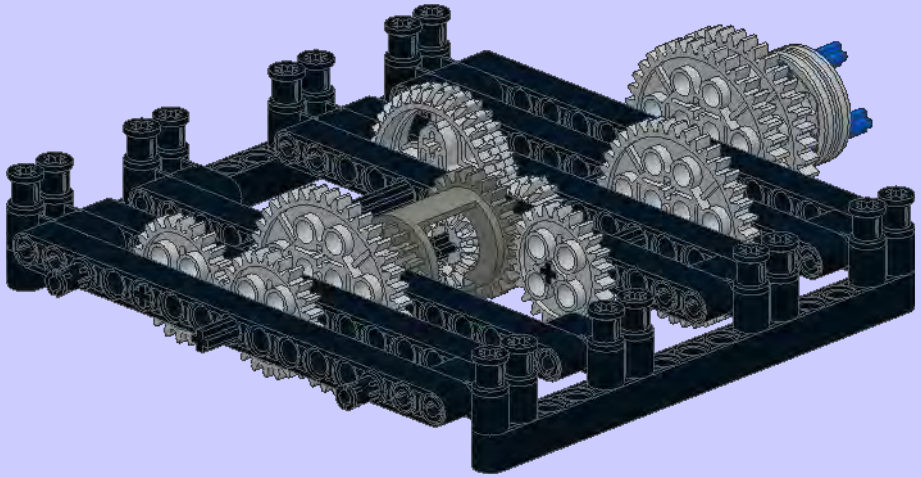

16

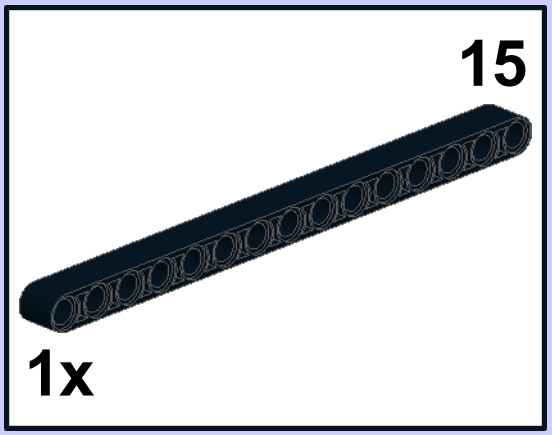


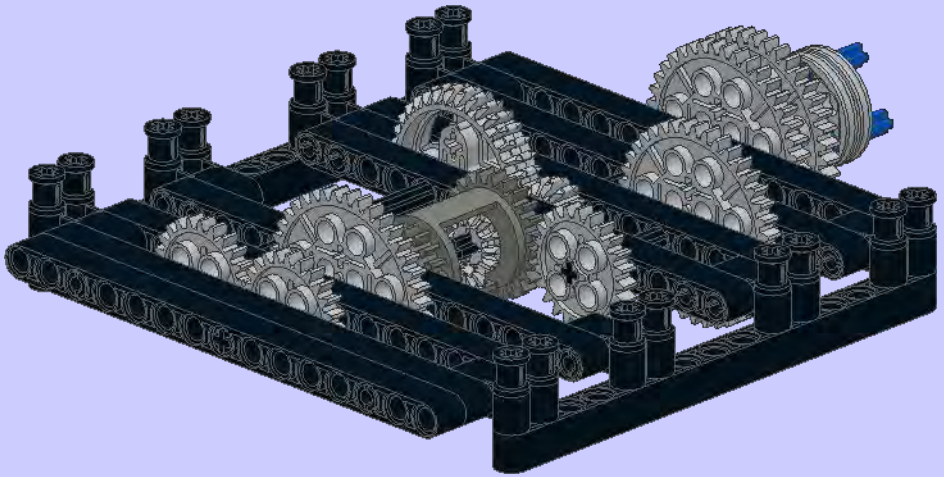

17

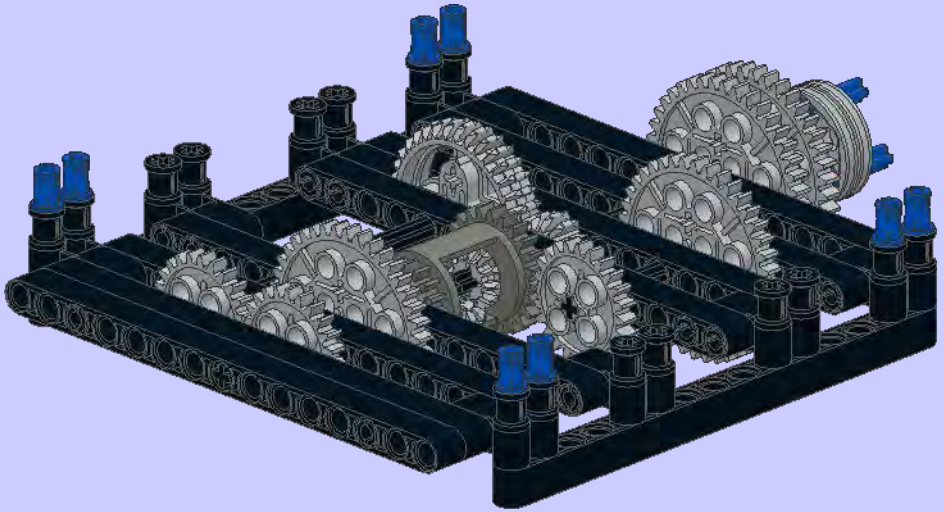

18

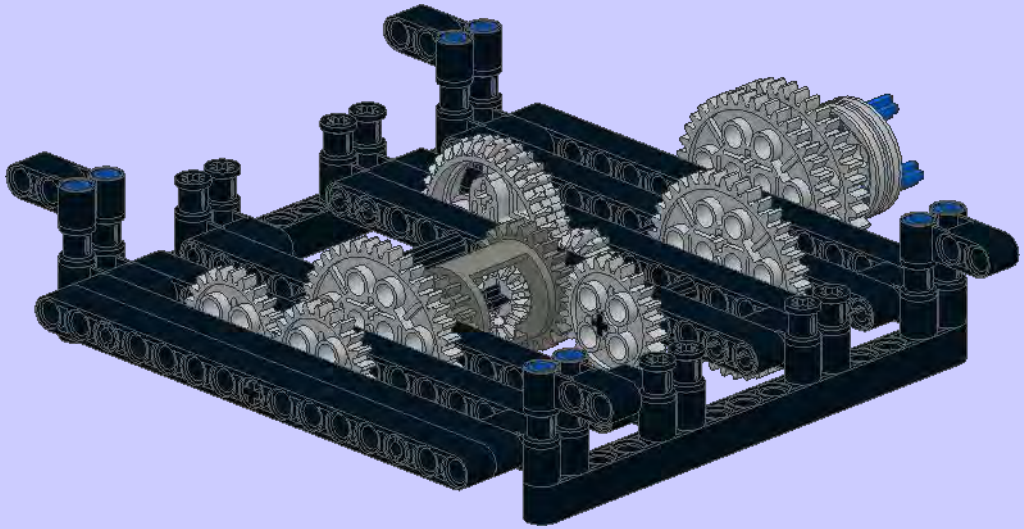

27

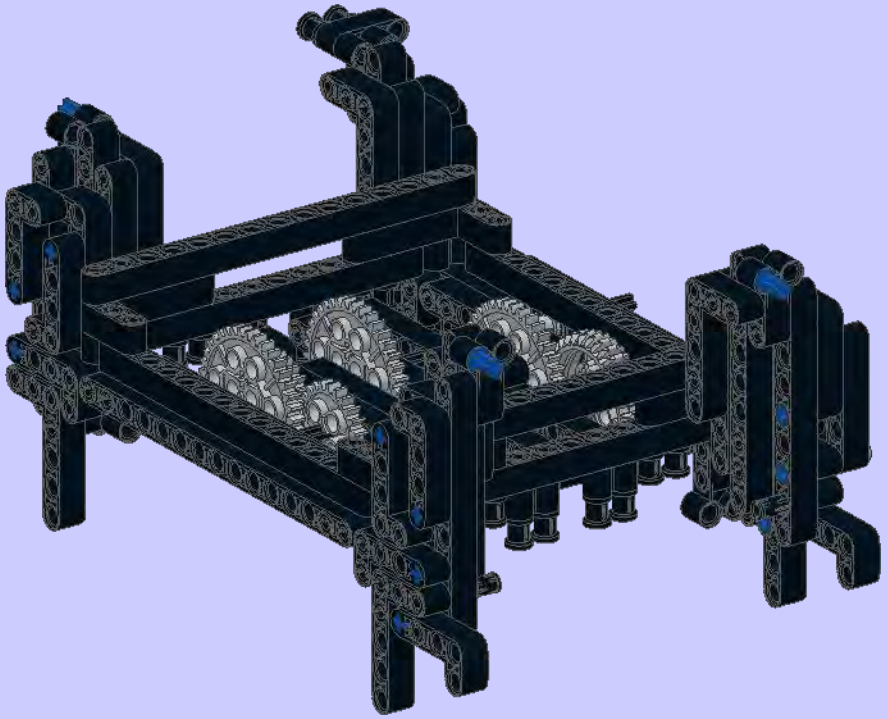

28

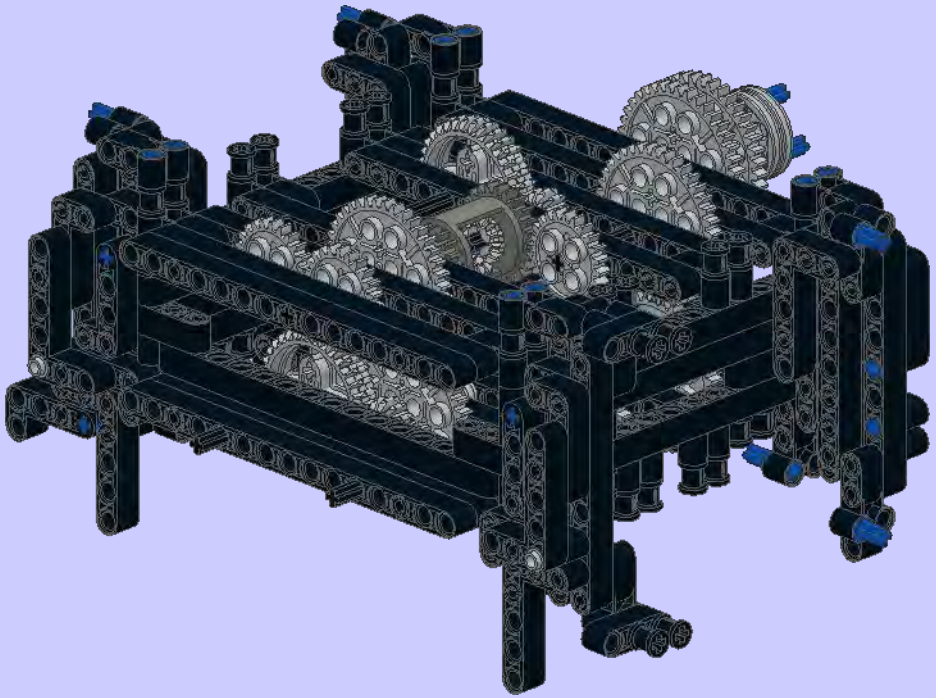

29

4x

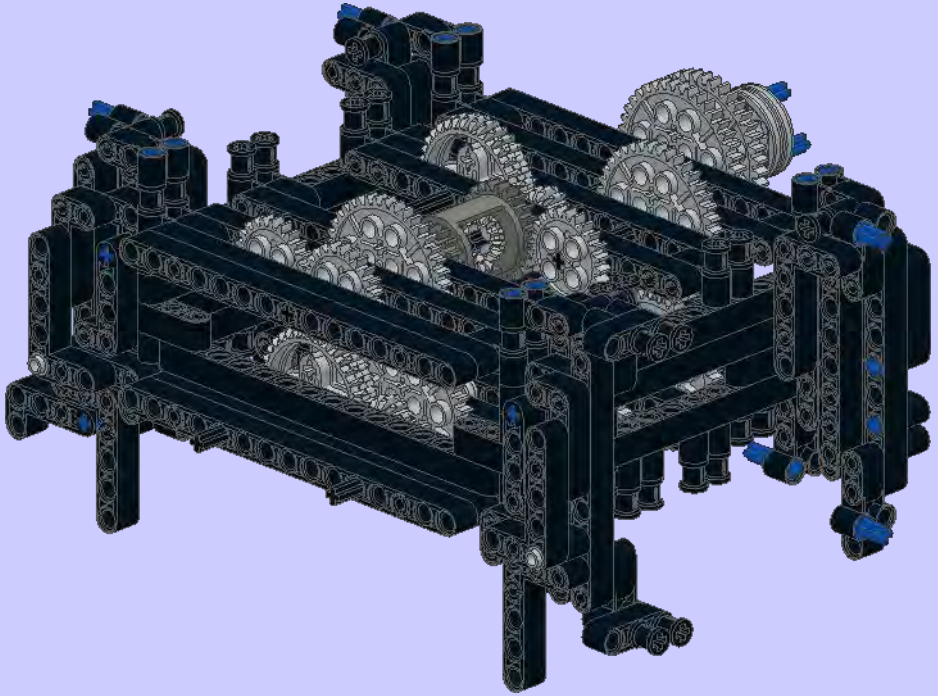

30

6x

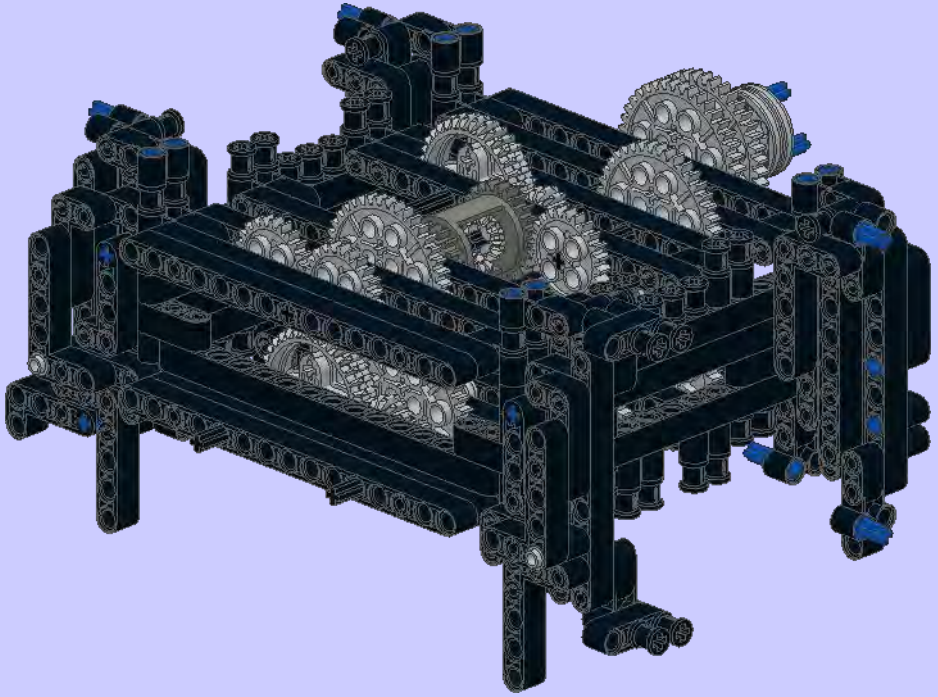

1

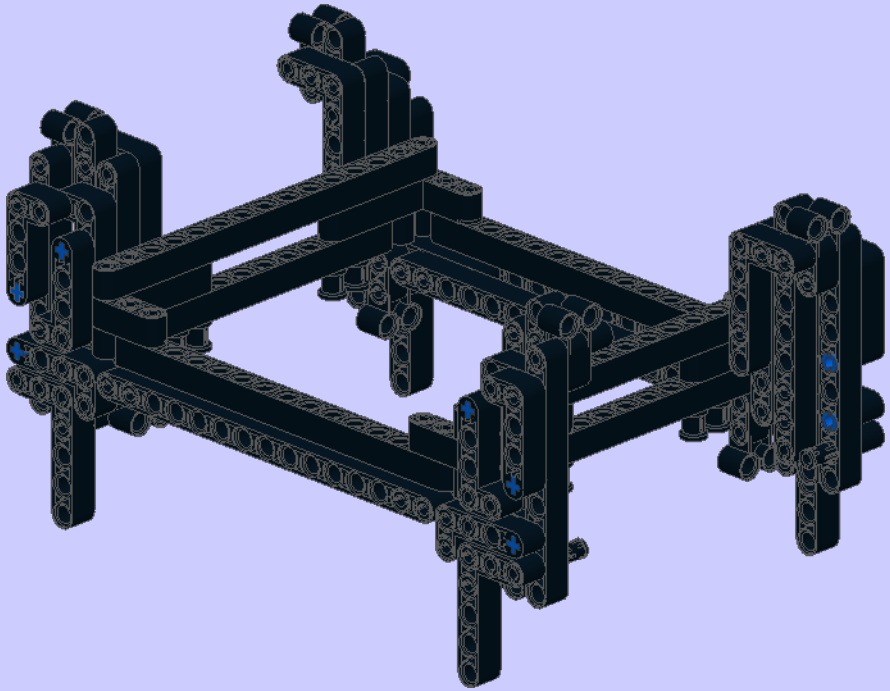

2 4x

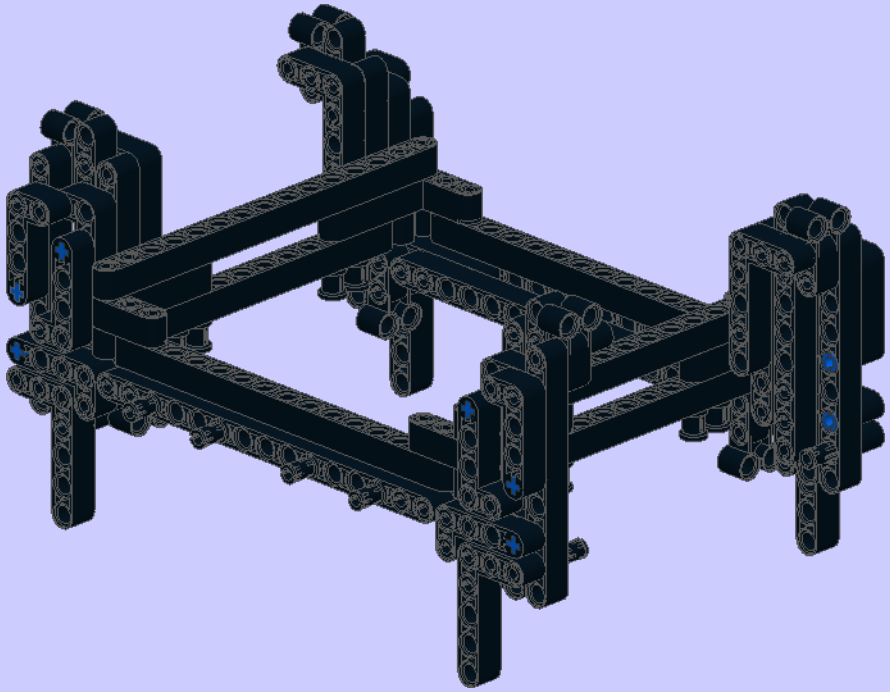

3

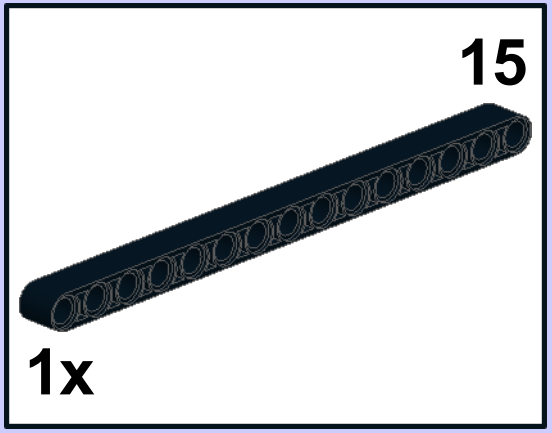


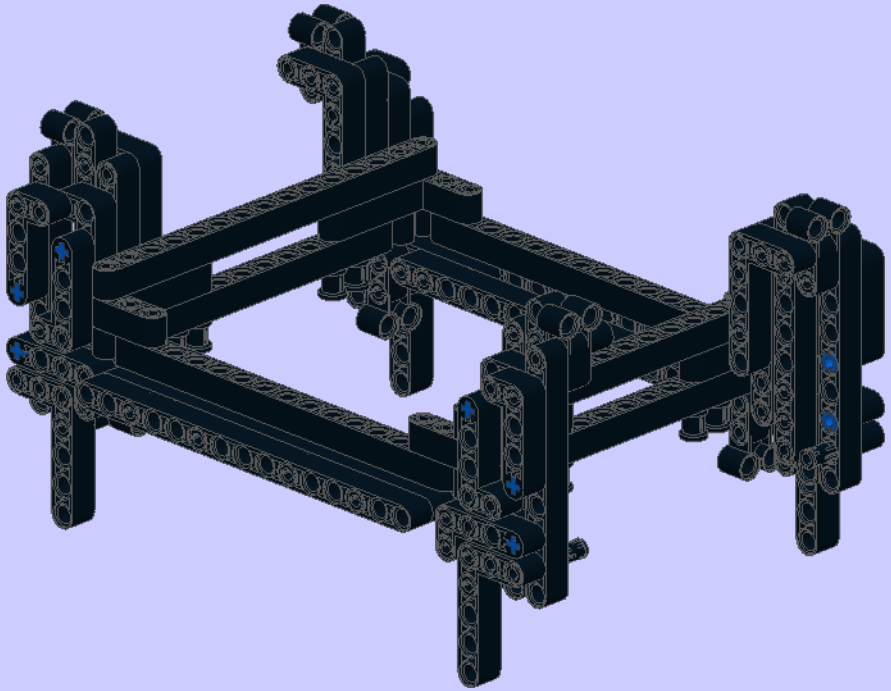

4

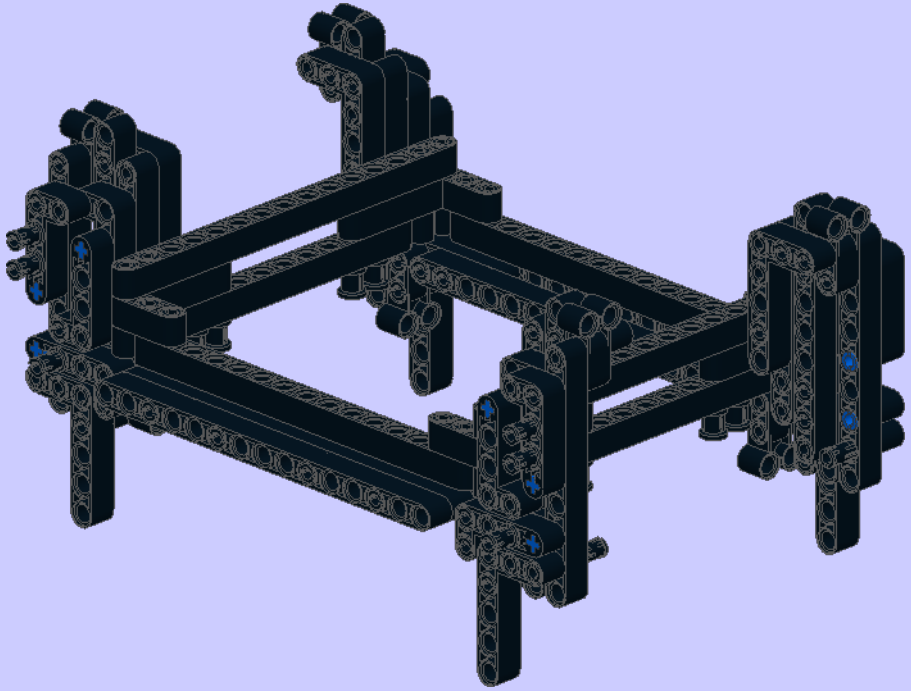

5

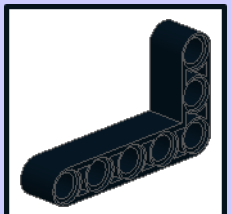

2x

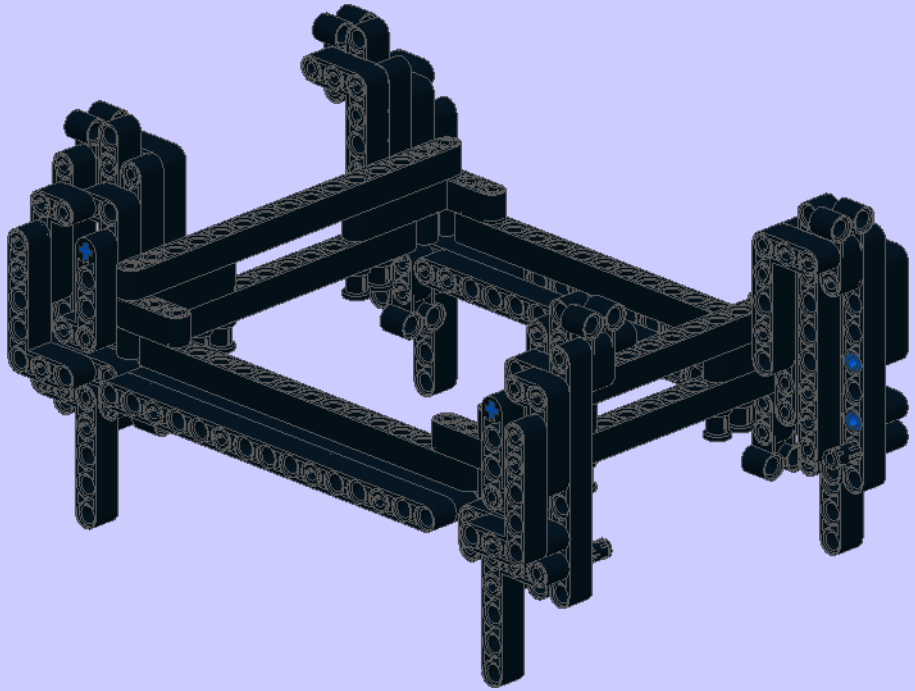

6

1x

2x

3

1x

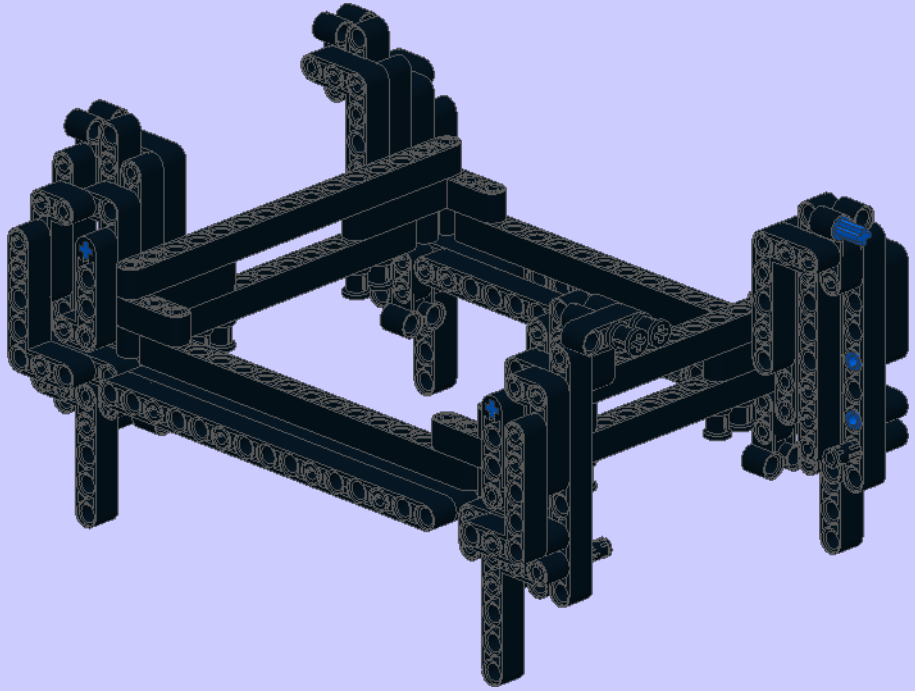

7

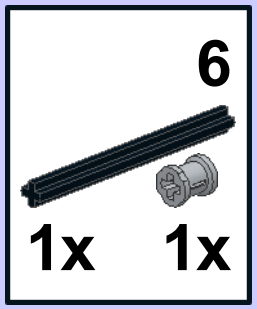


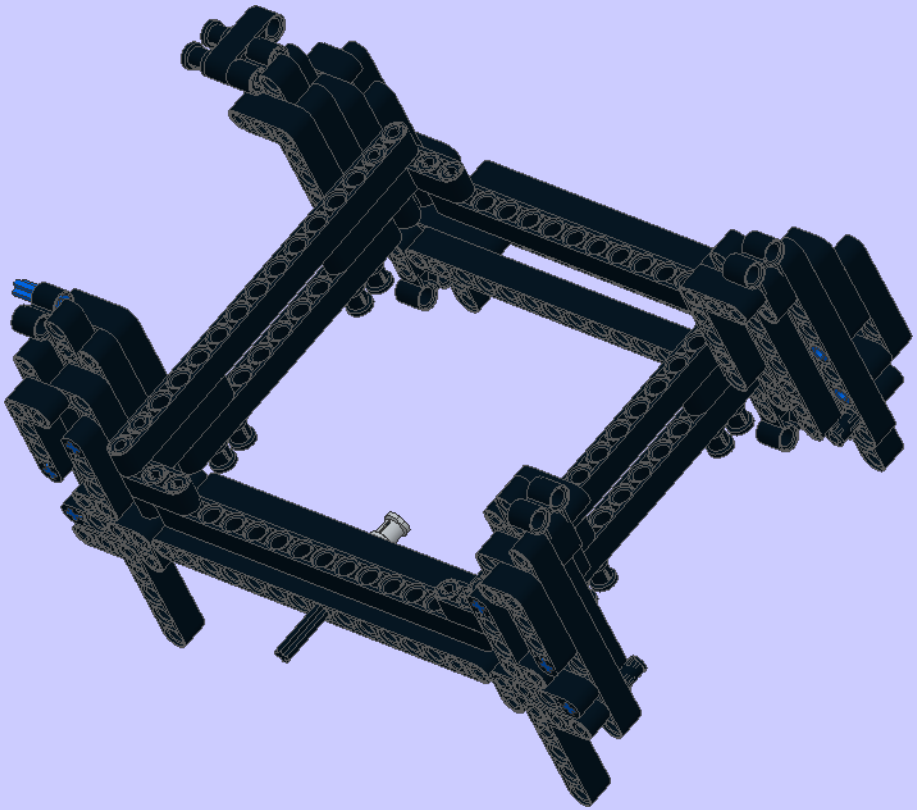

8

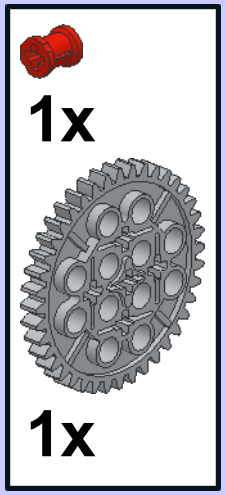


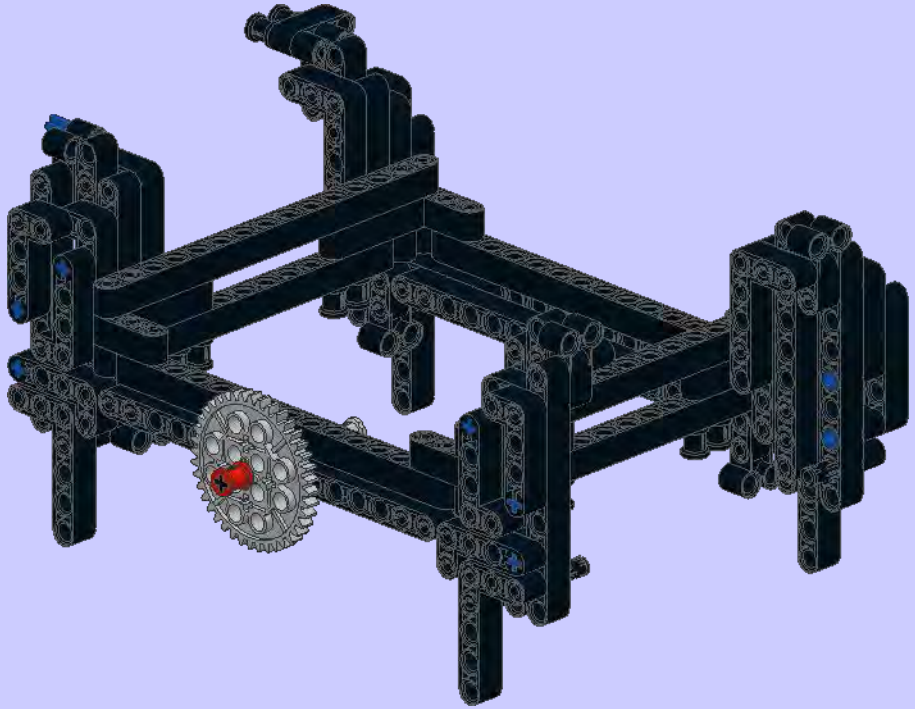

9

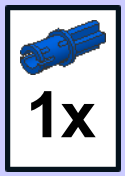


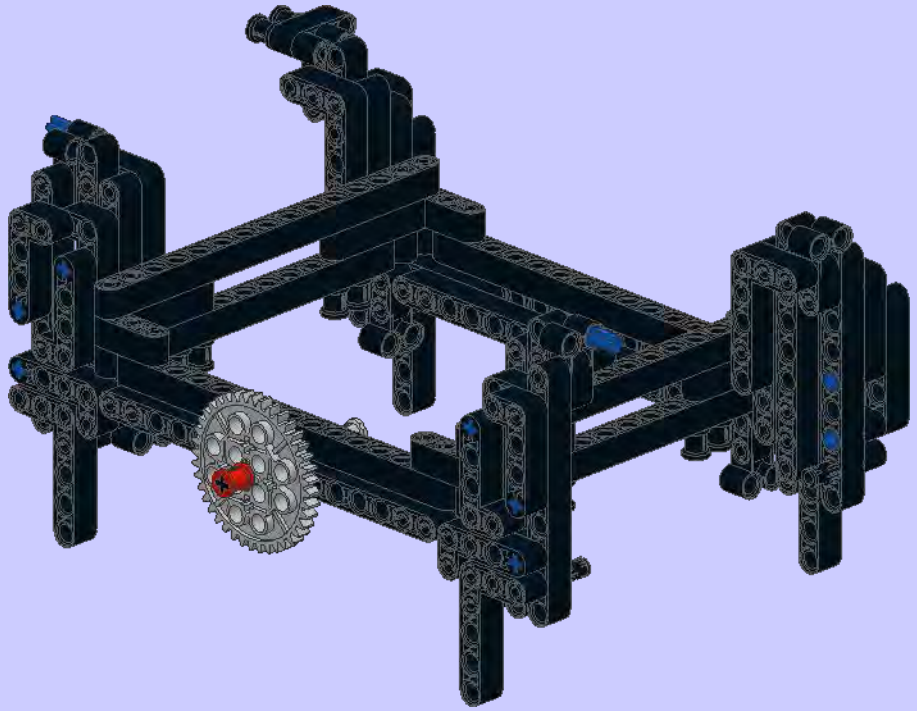

10

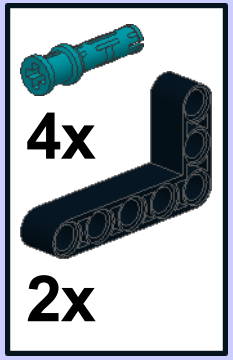


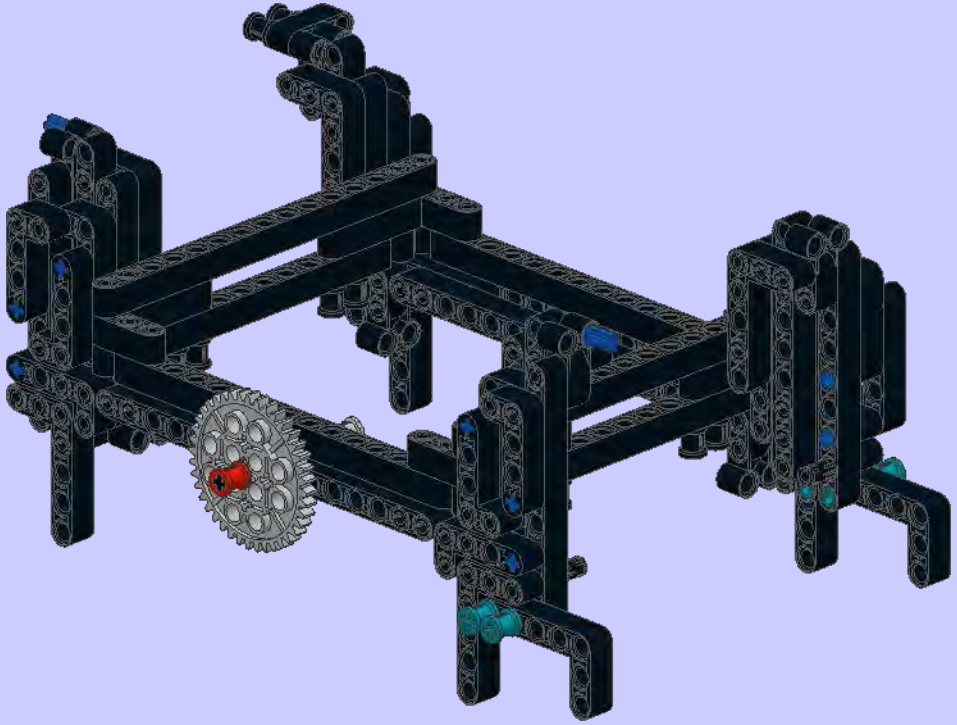

**11**

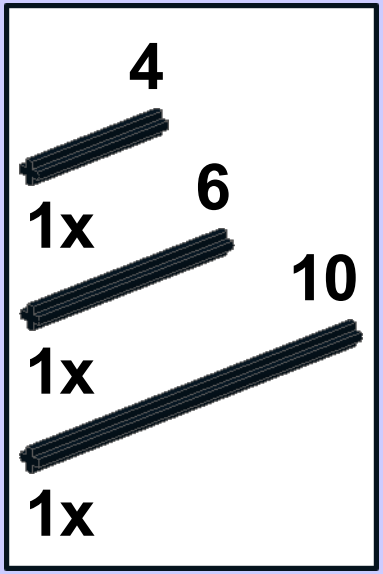


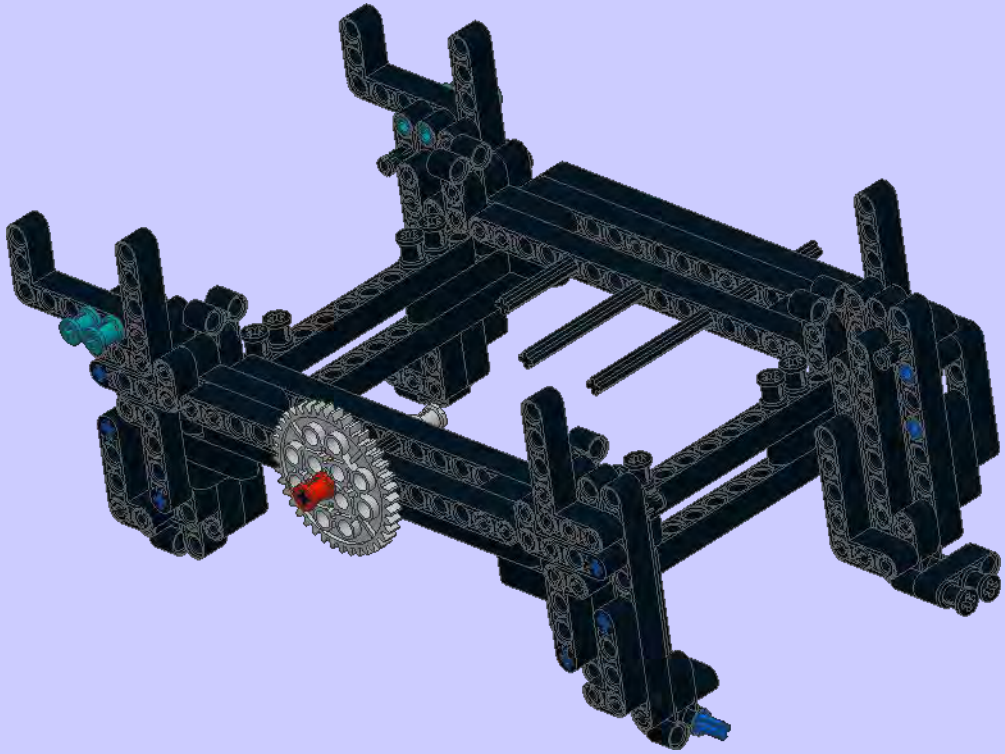

**12**

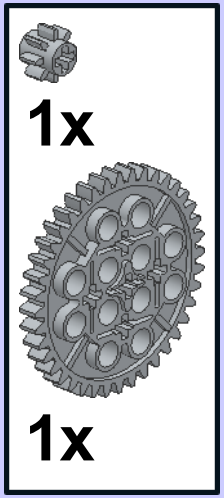


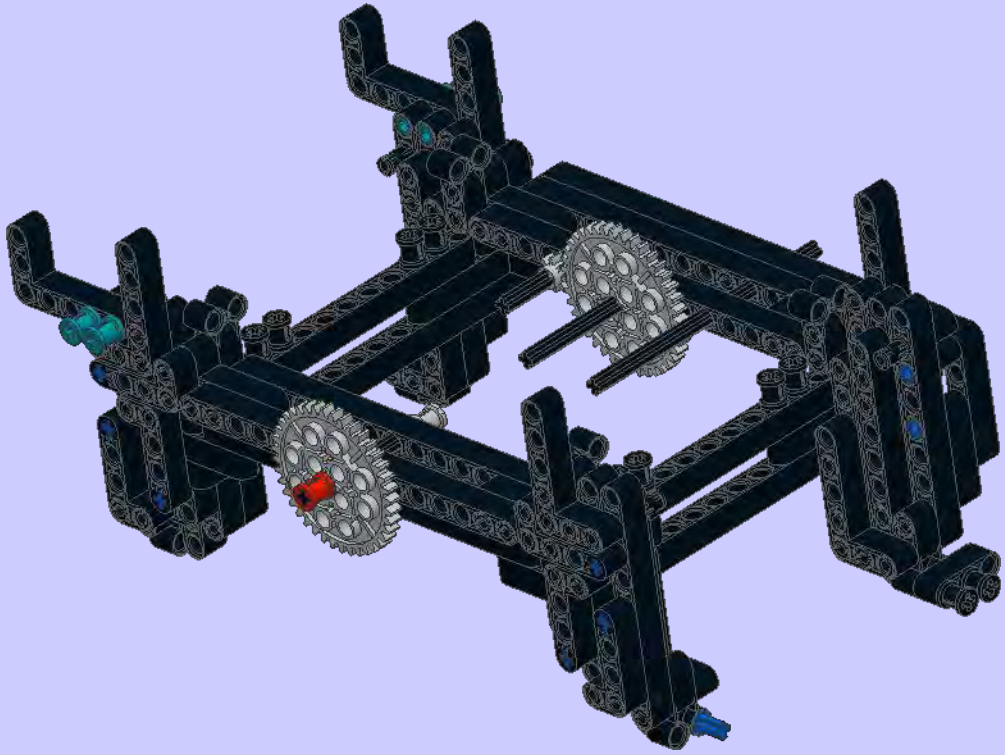

13

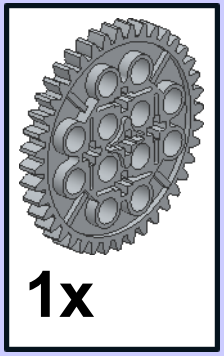


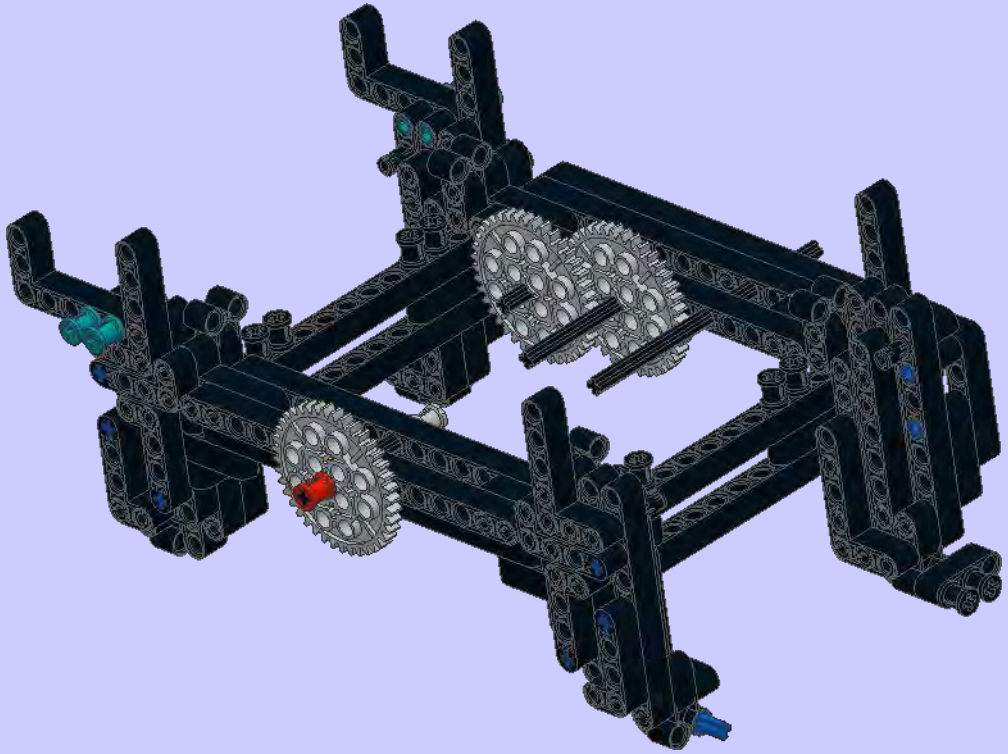

14

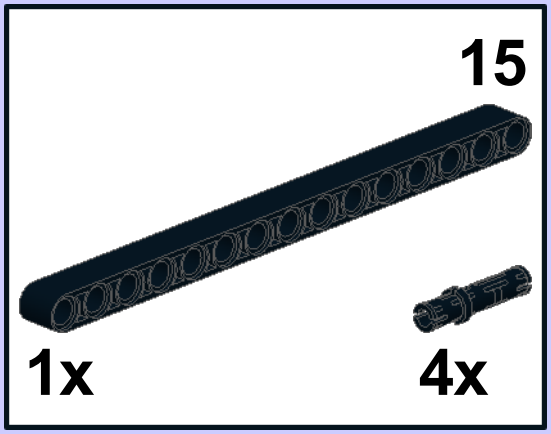


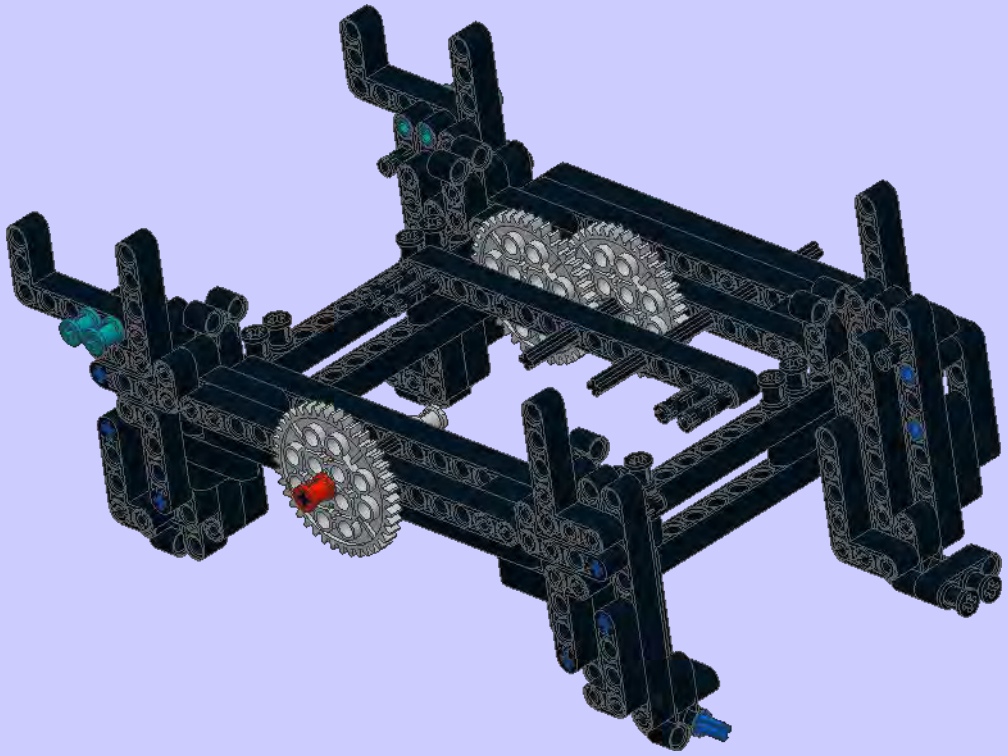

15

2x

4x

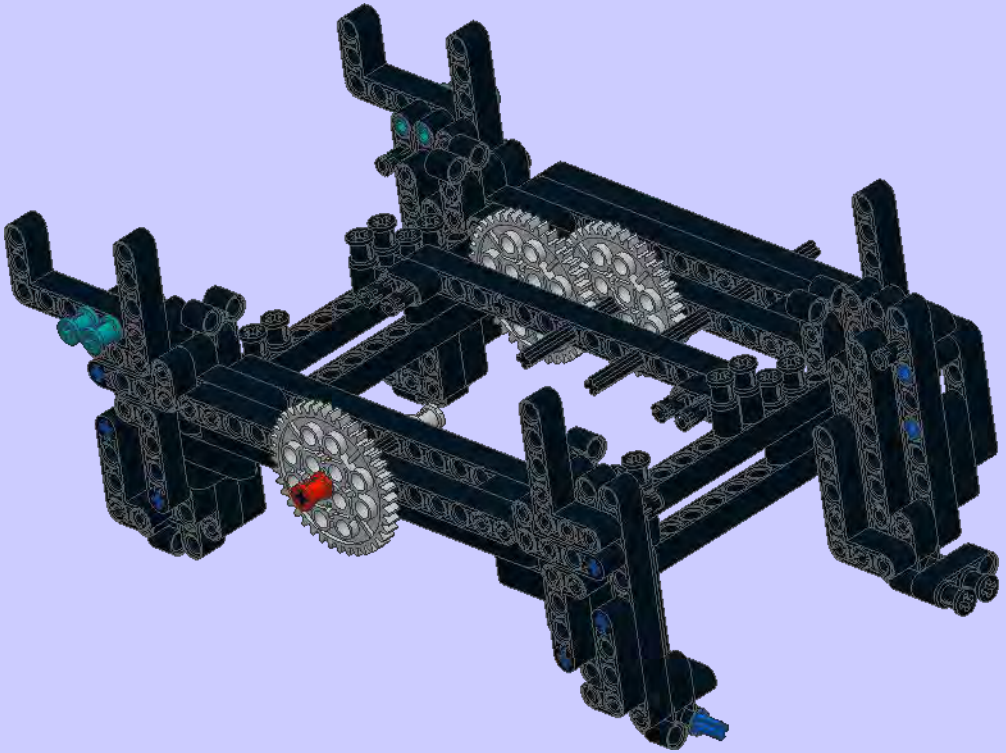

16

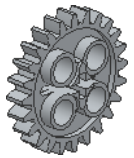

2x

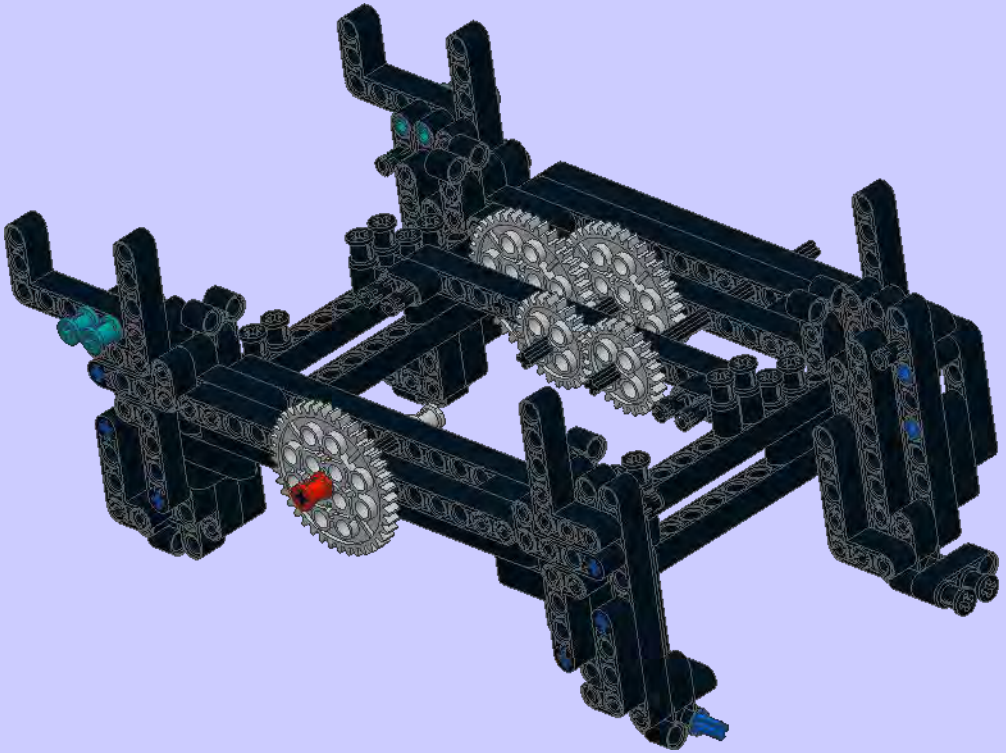

1

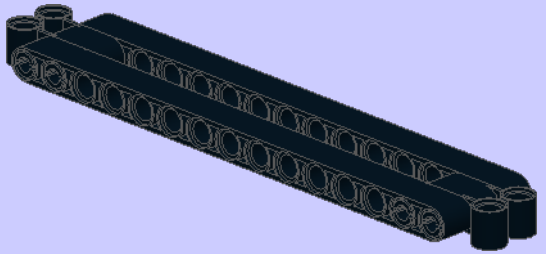

2

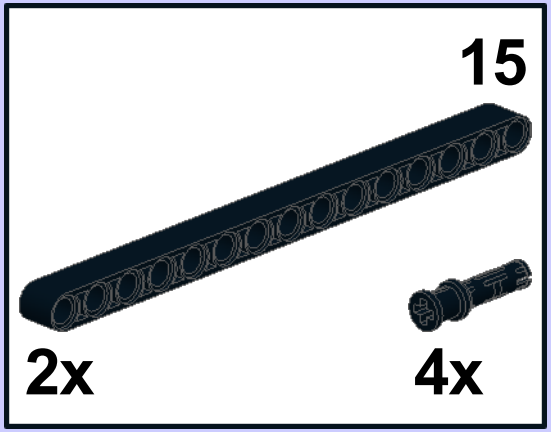


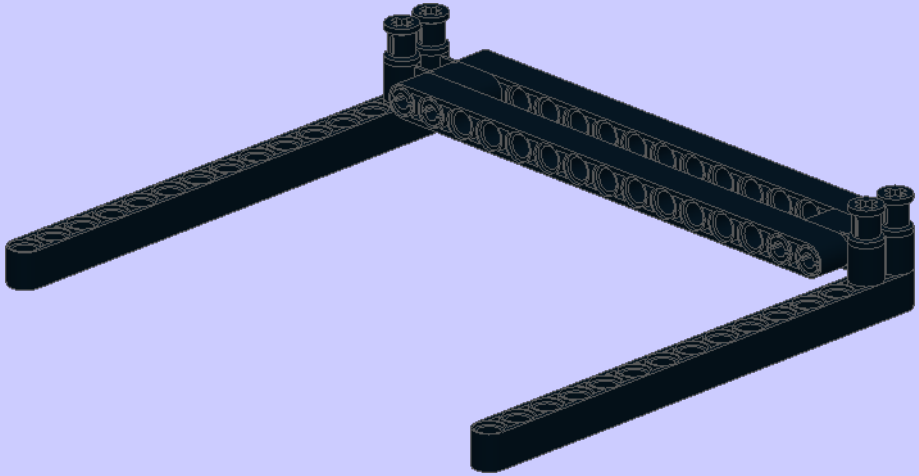

3

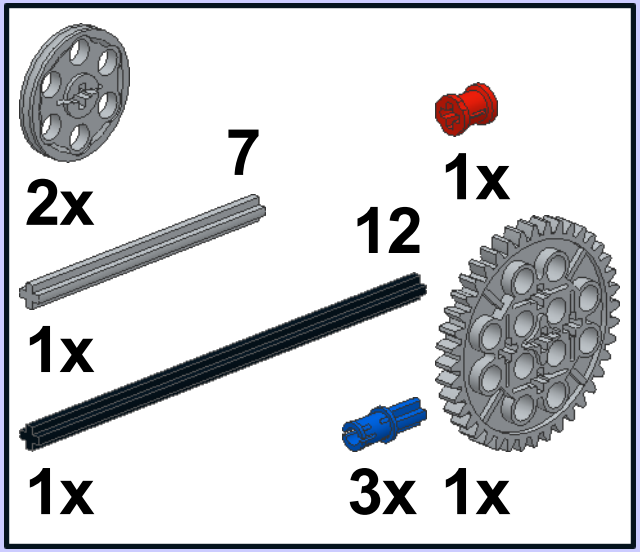


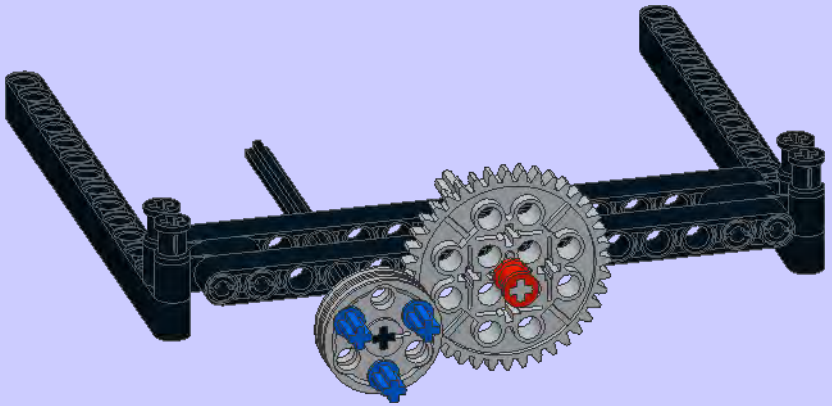

**4**

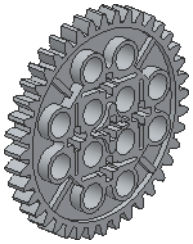

1x

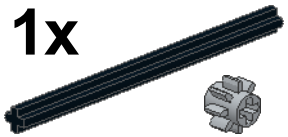

8



1x

1x

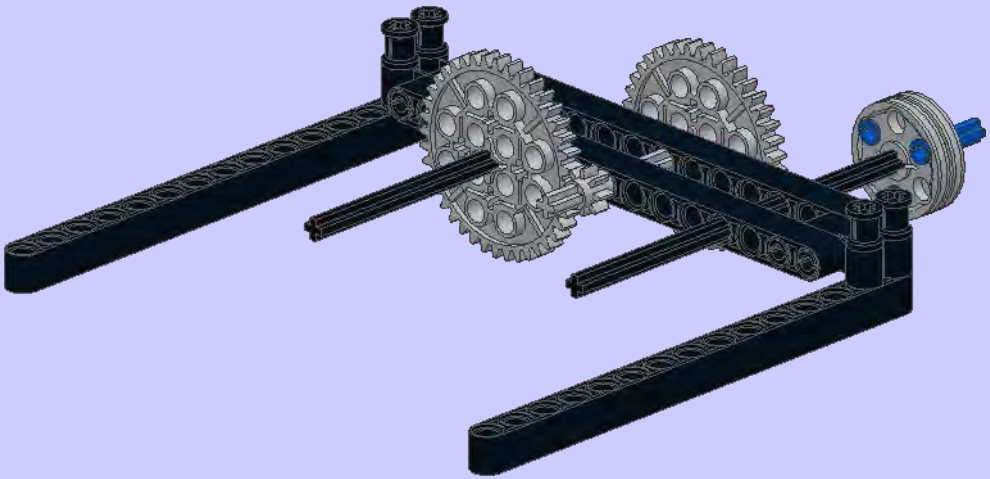

**5**

15

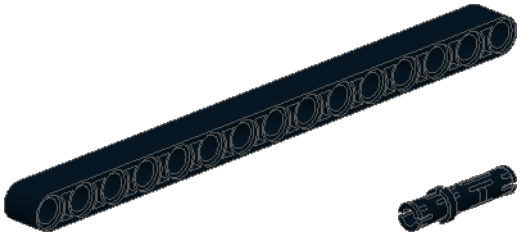



1x

4x

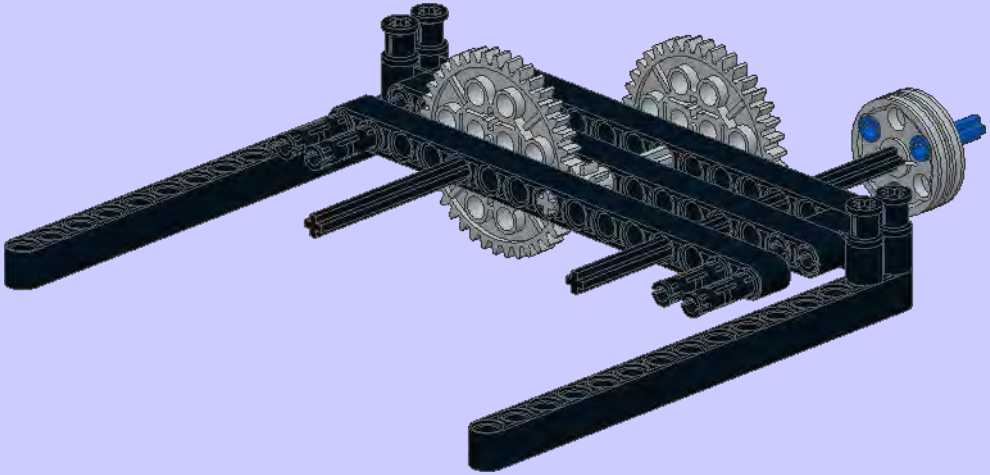

**6**

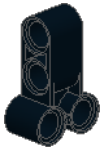

2x

4x

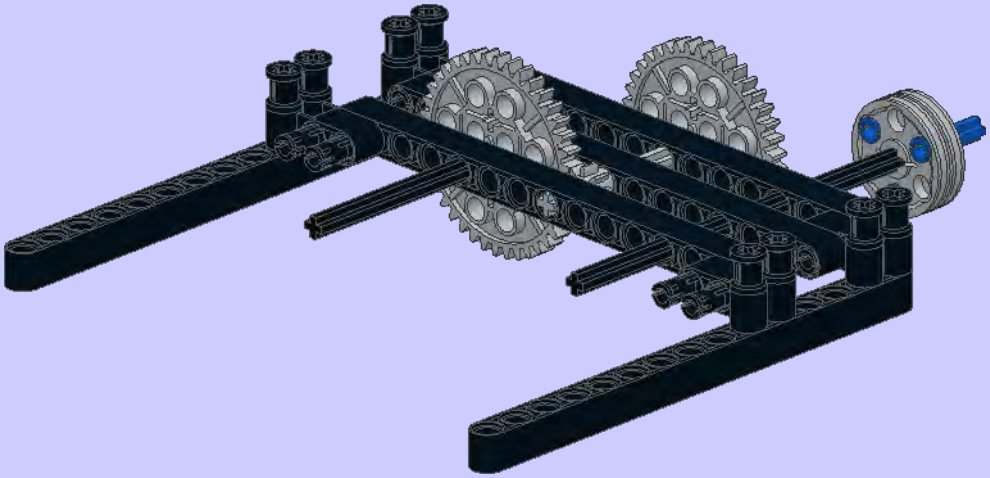

**7**

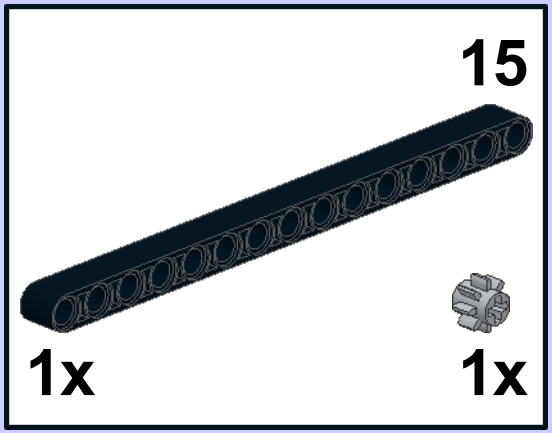


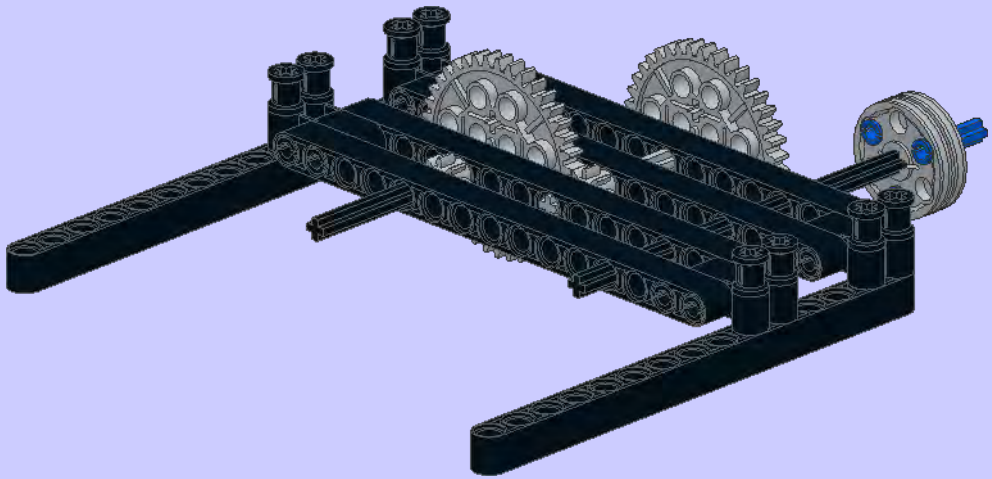

**8**

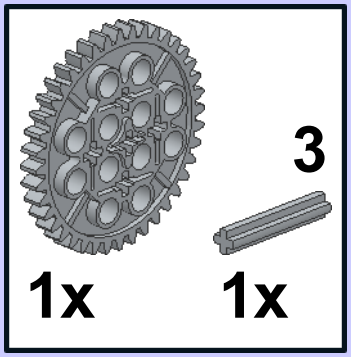


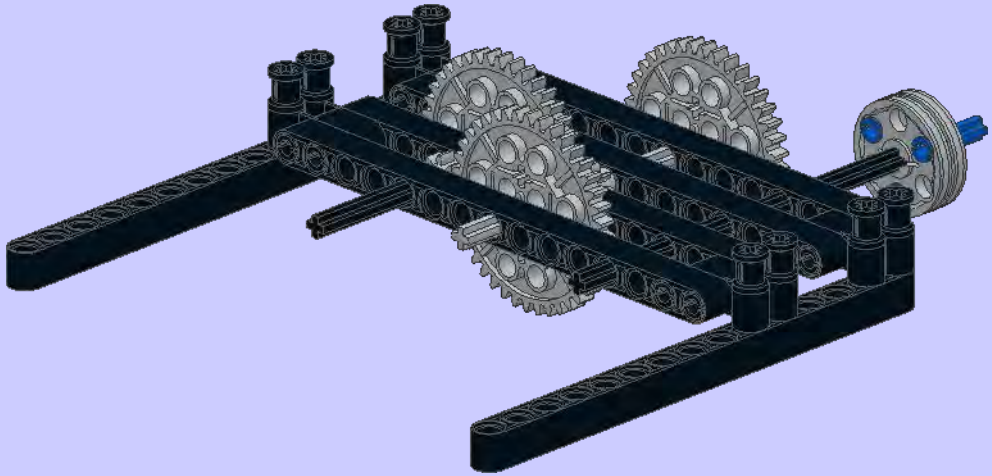

**9**

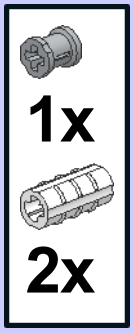


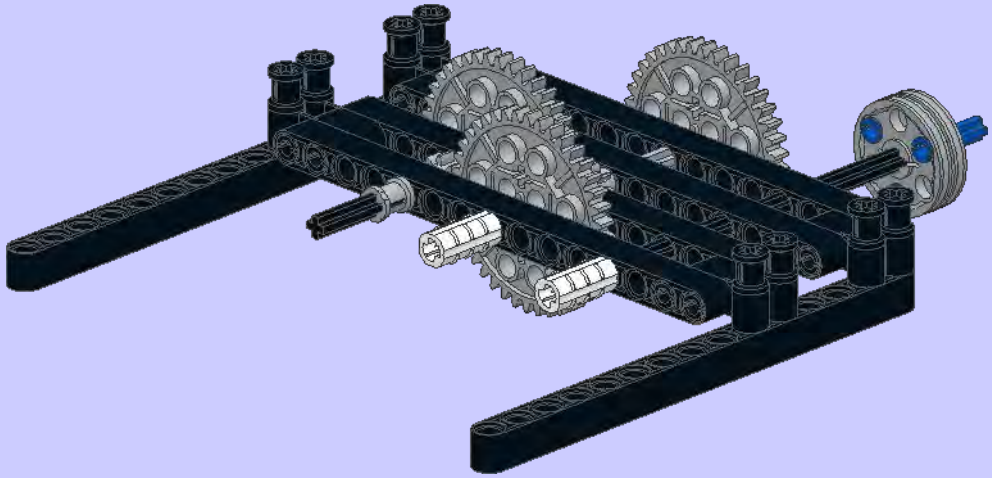

**10**

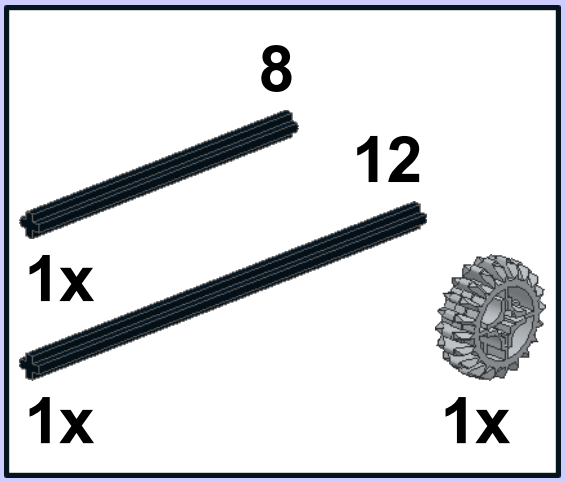


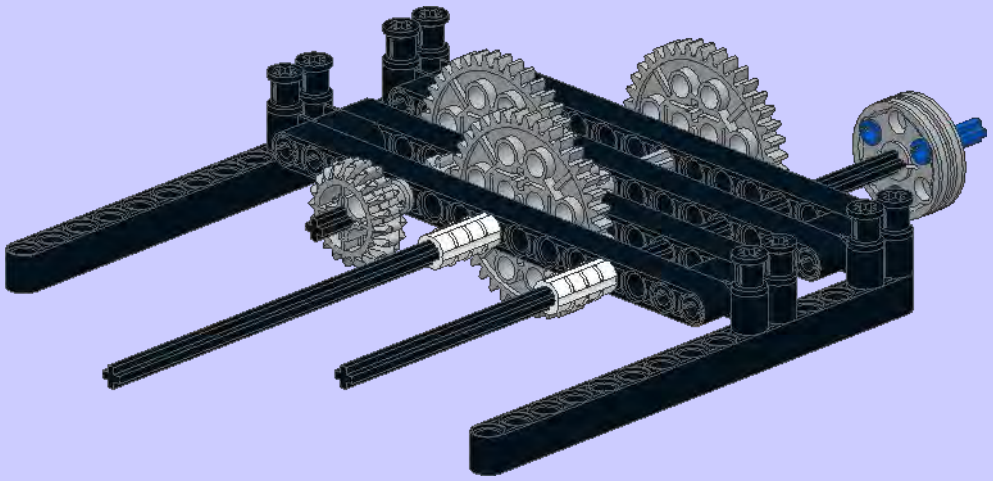

**11**

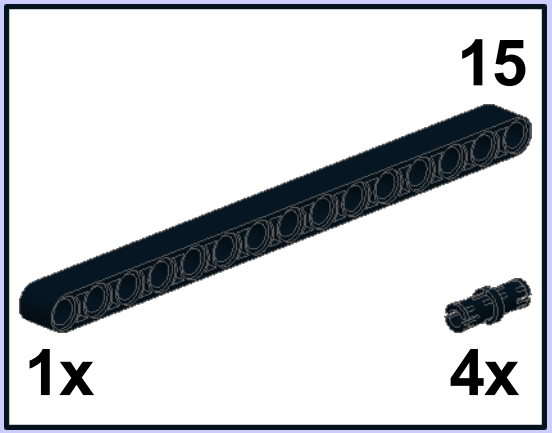


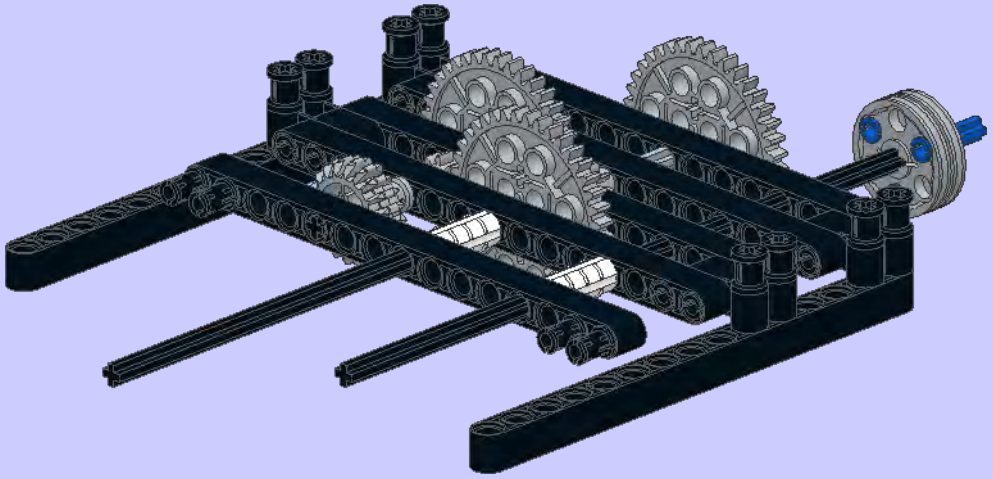

**12**

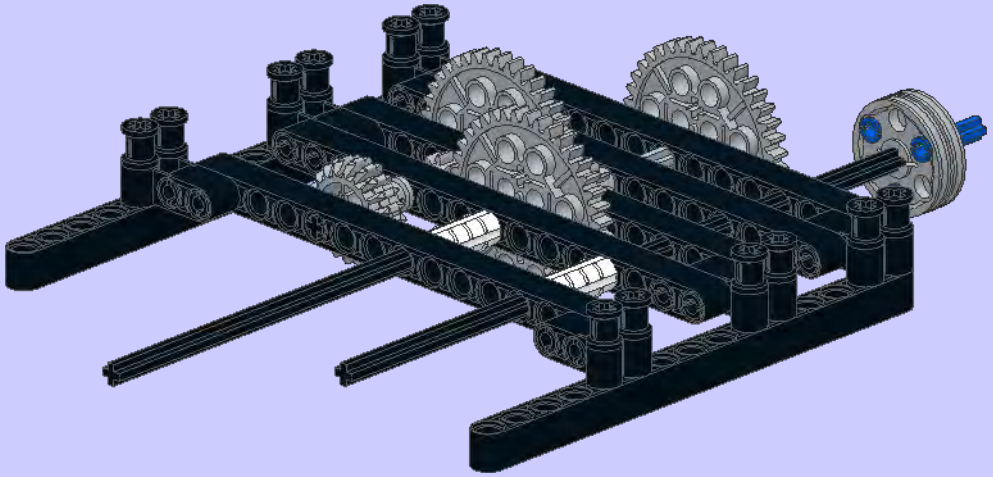

13

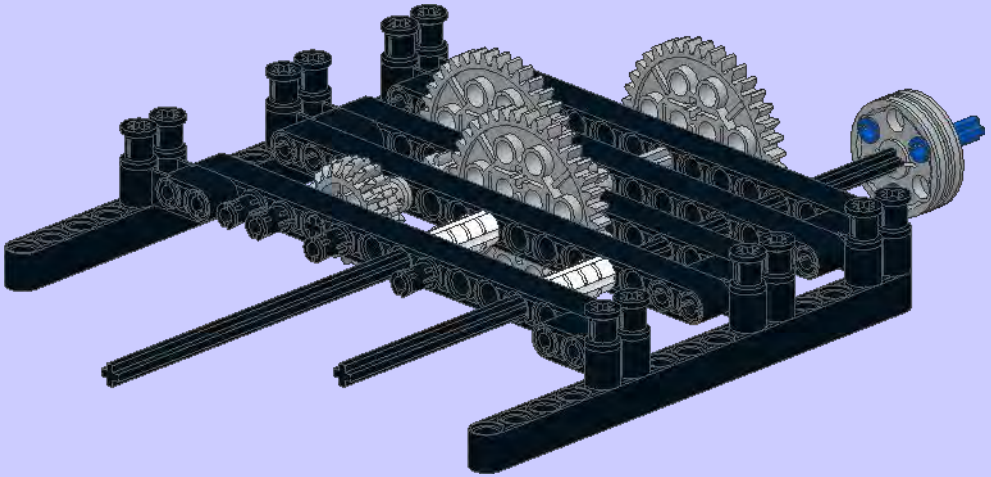

14

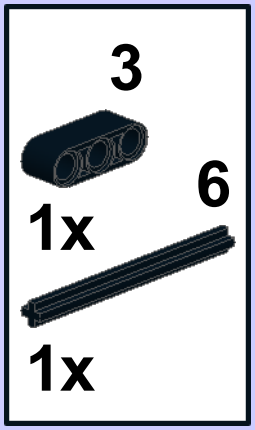


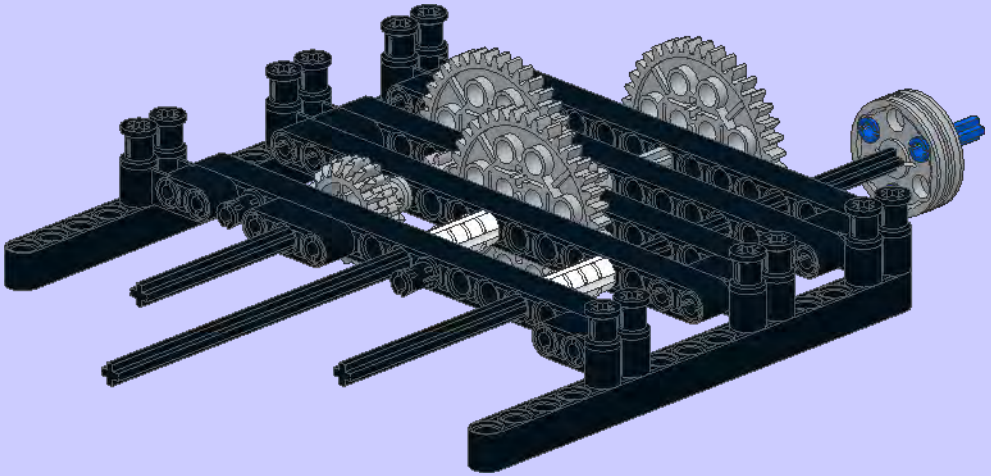

15

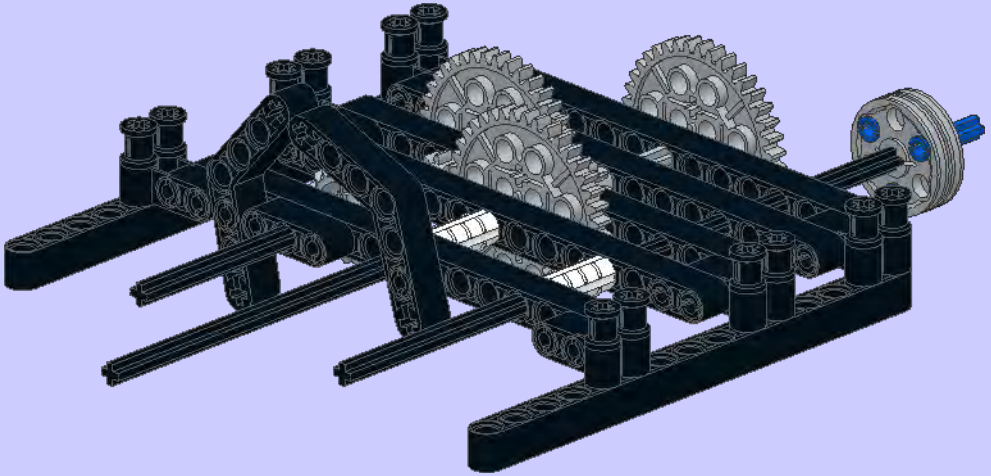

**16**

2x

1x

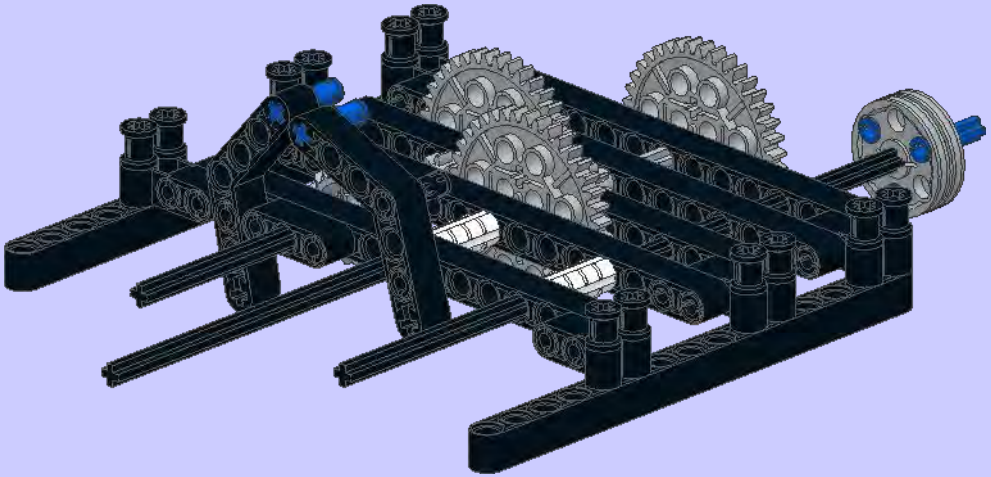

**17**

1x

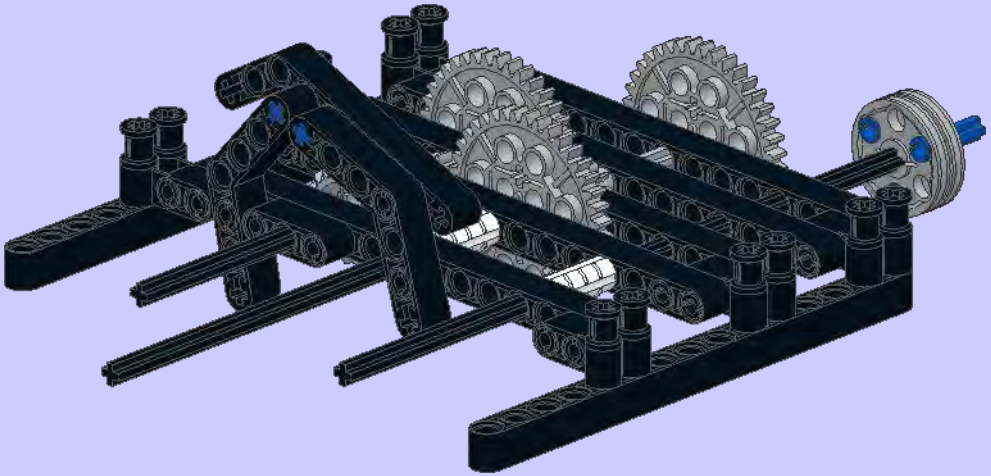

**18**

1x

1x

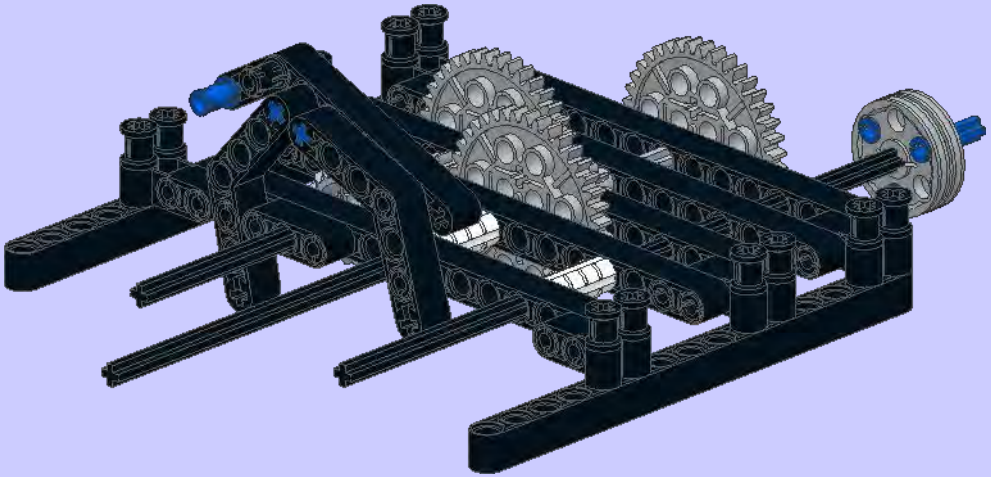

**19**

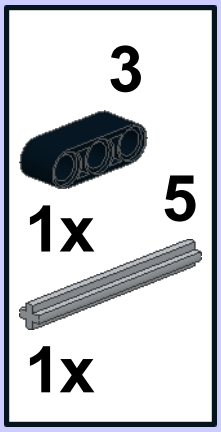


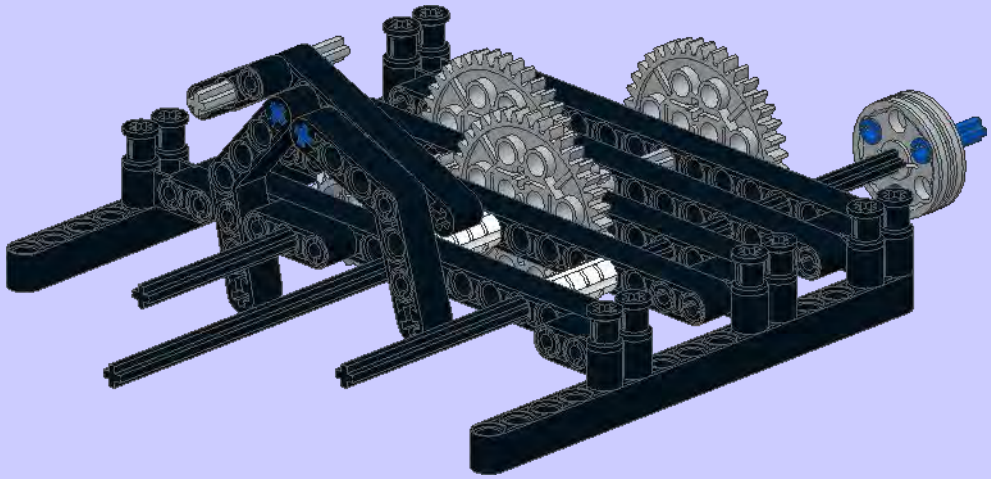

**20**

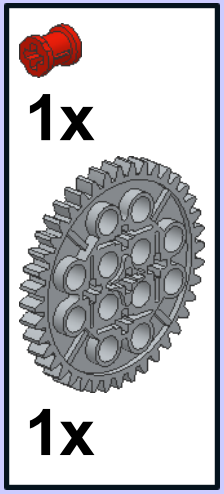


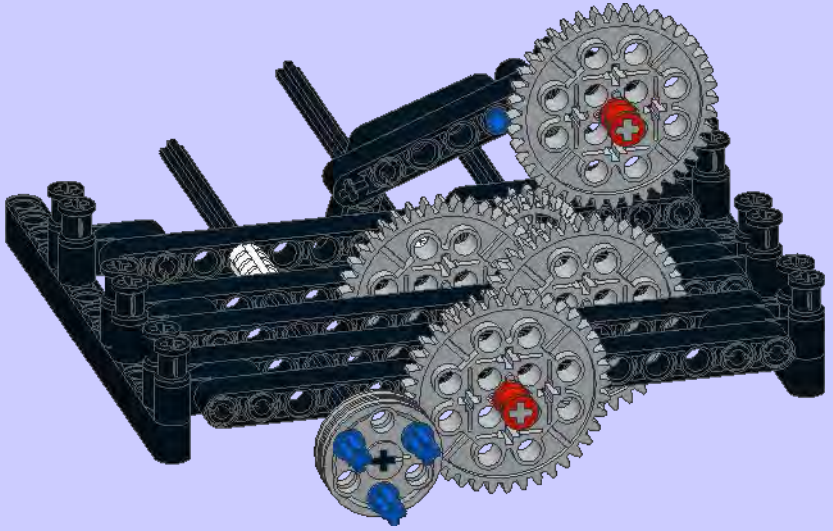

**21**

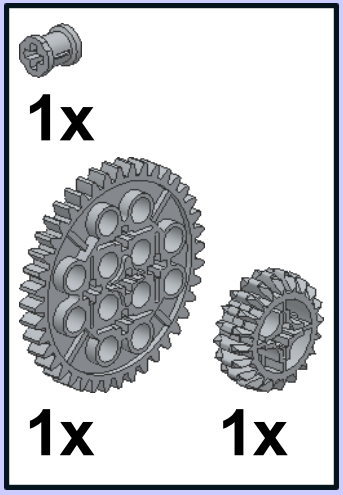


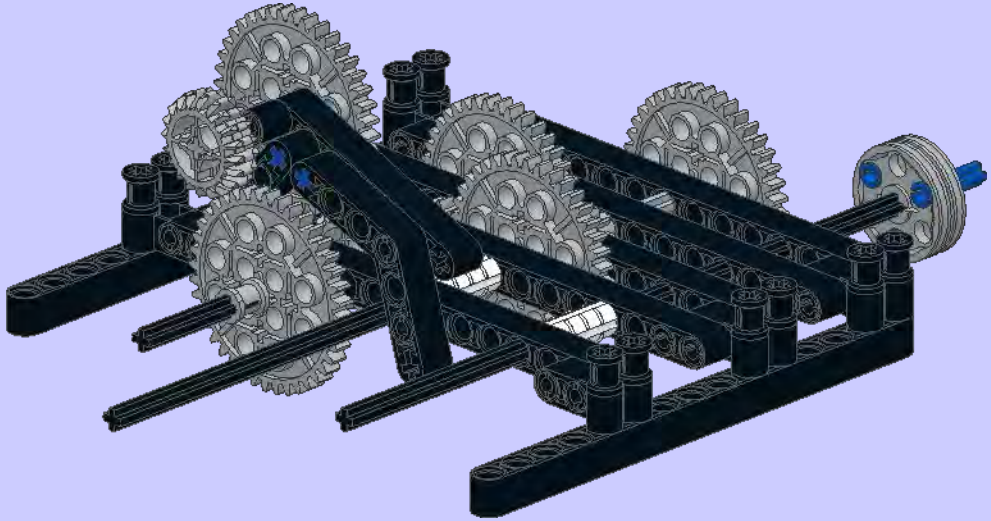

**22**

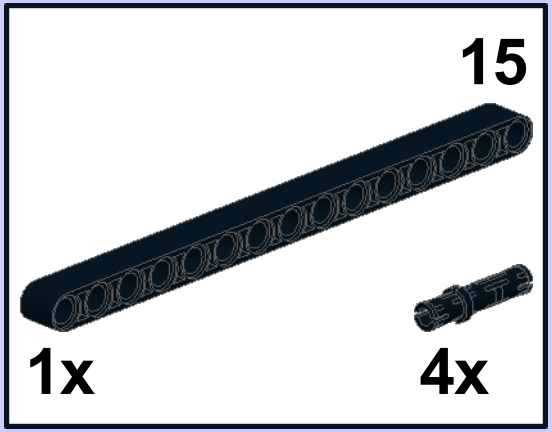


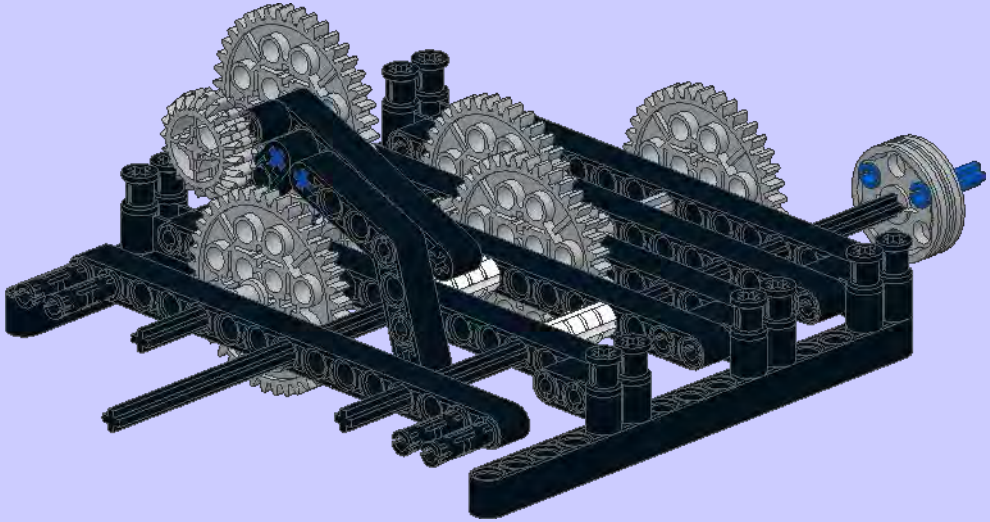

**23**

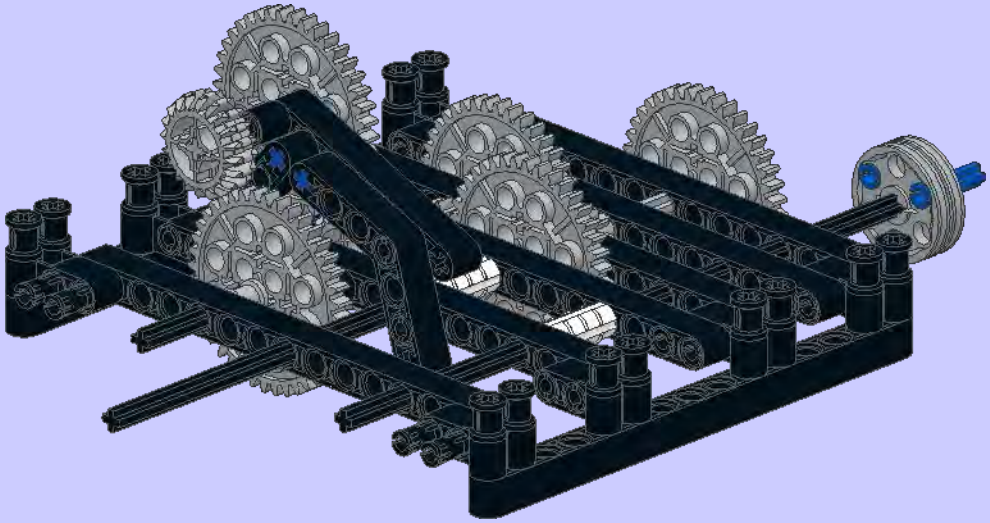

**24**

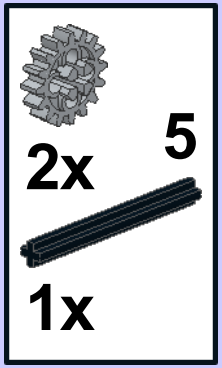


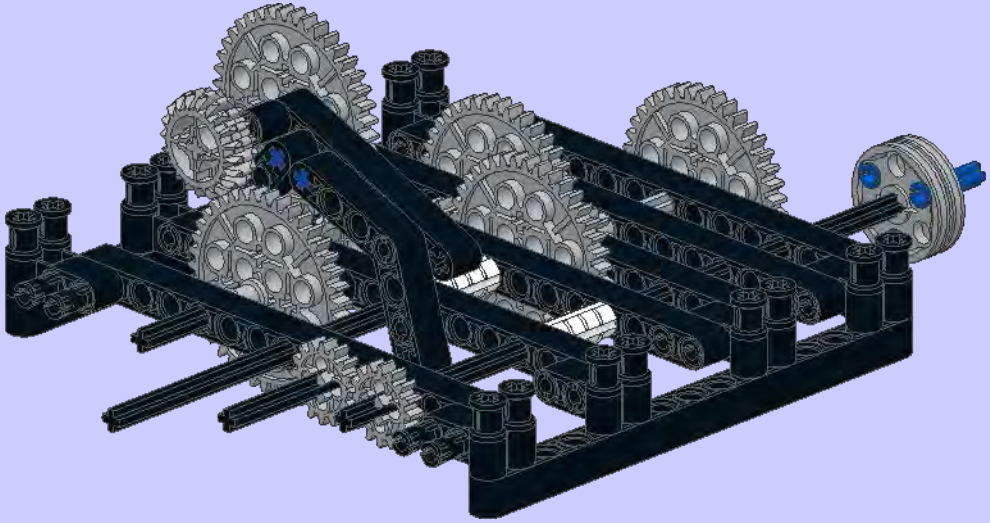

25

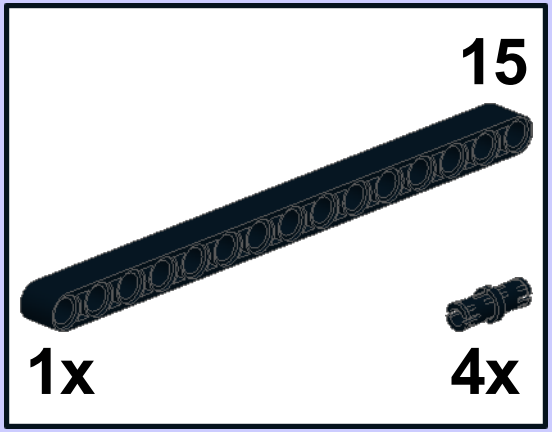


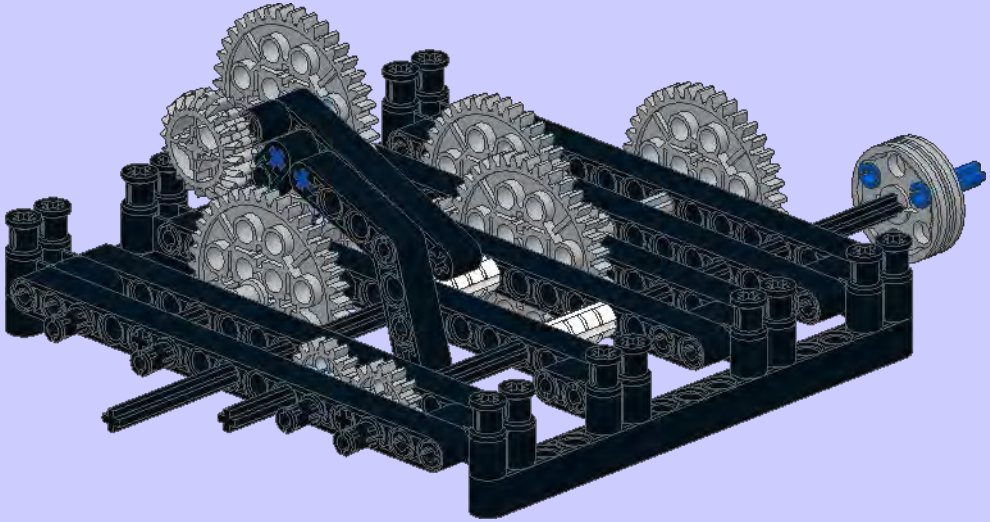

26

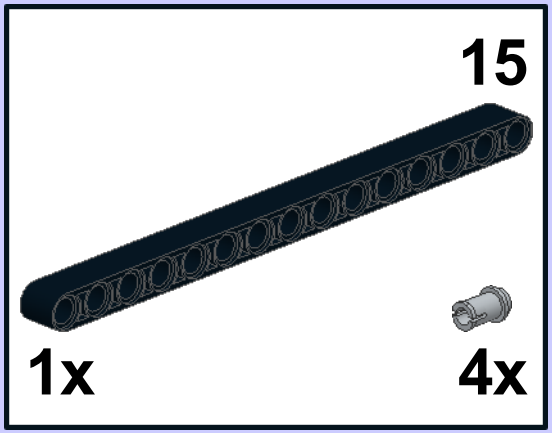


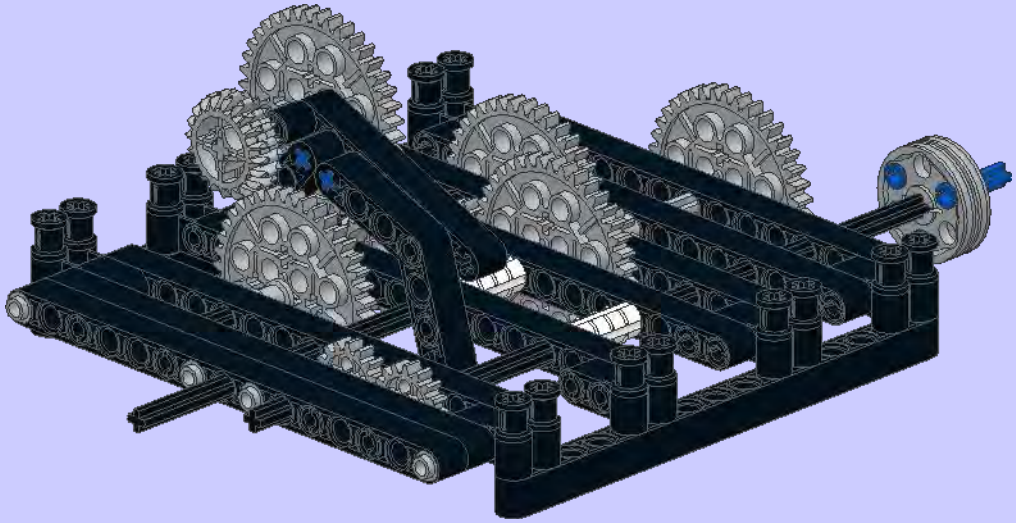

27

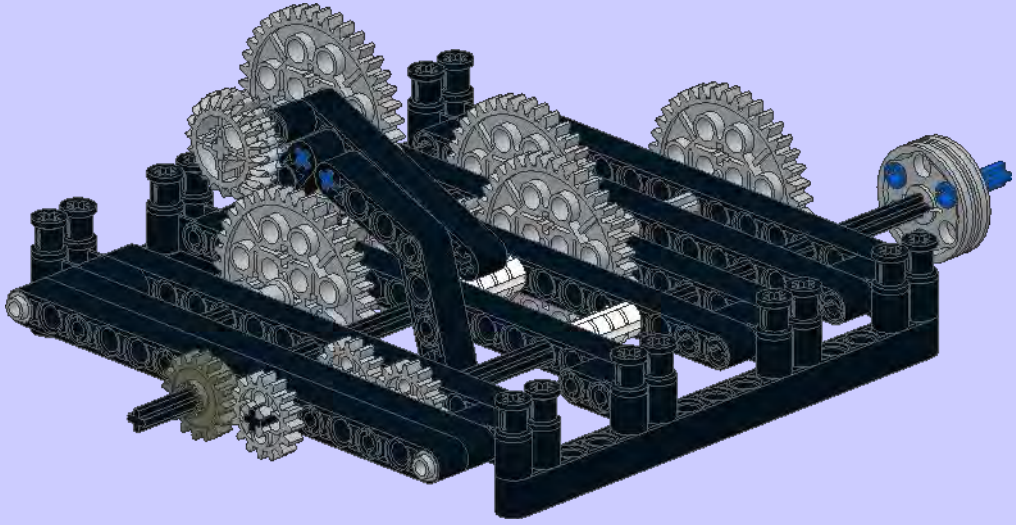

28

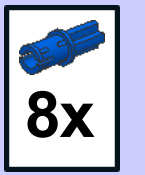


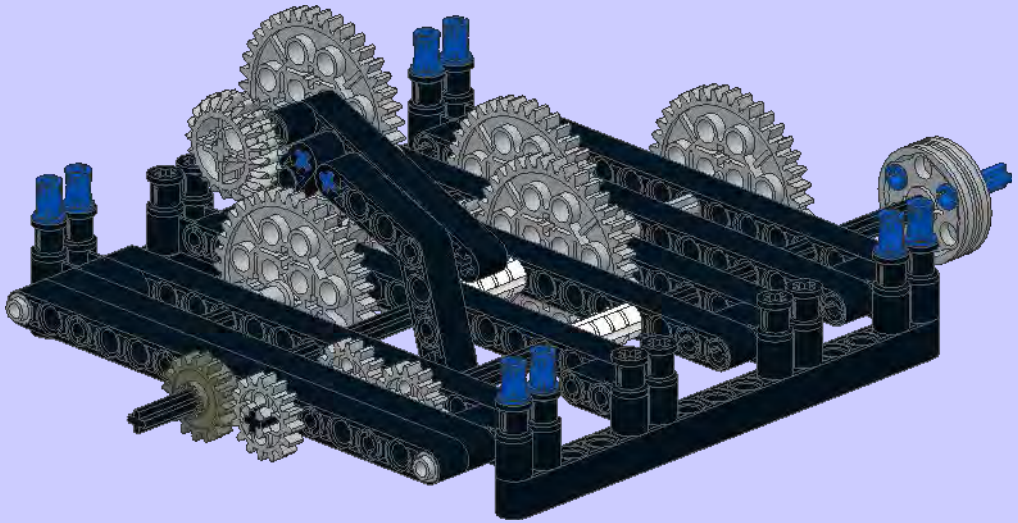

29

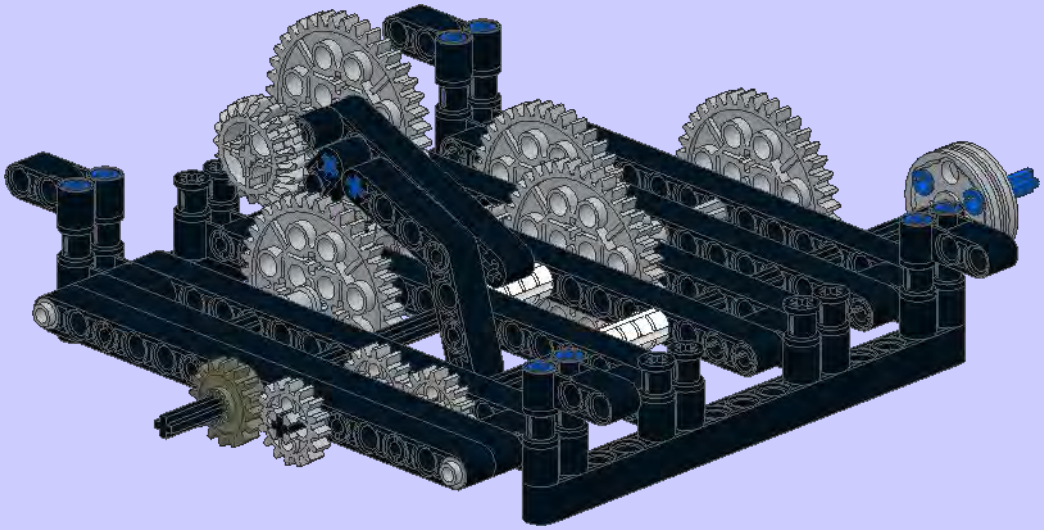

17

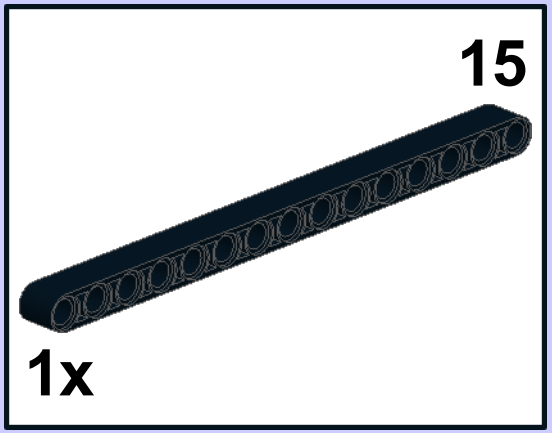


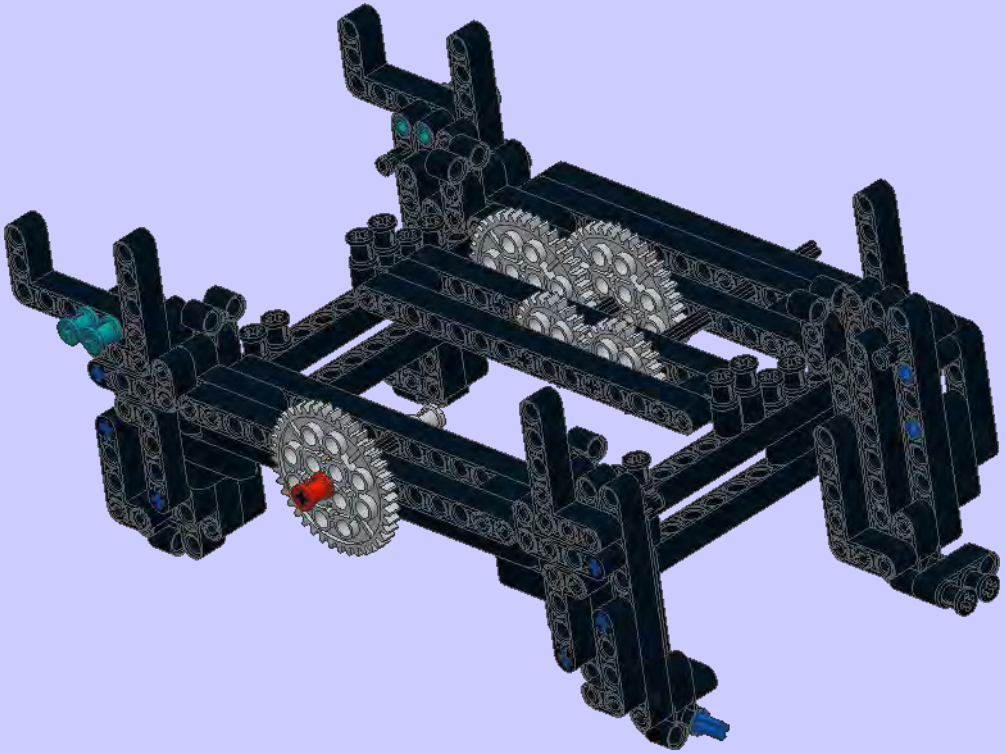

18

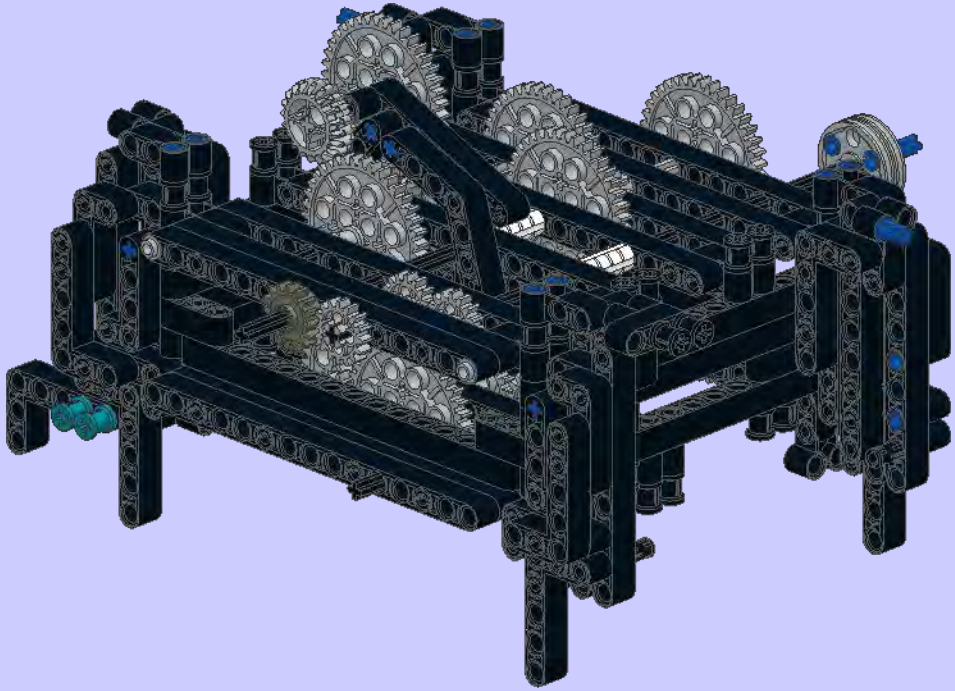

19

4x

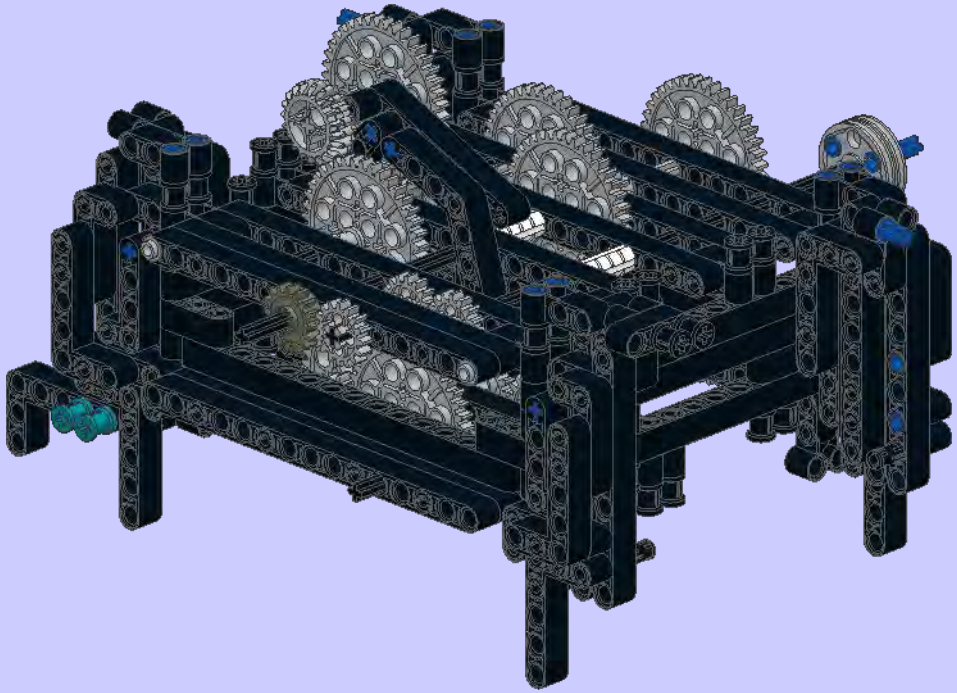

20

4x

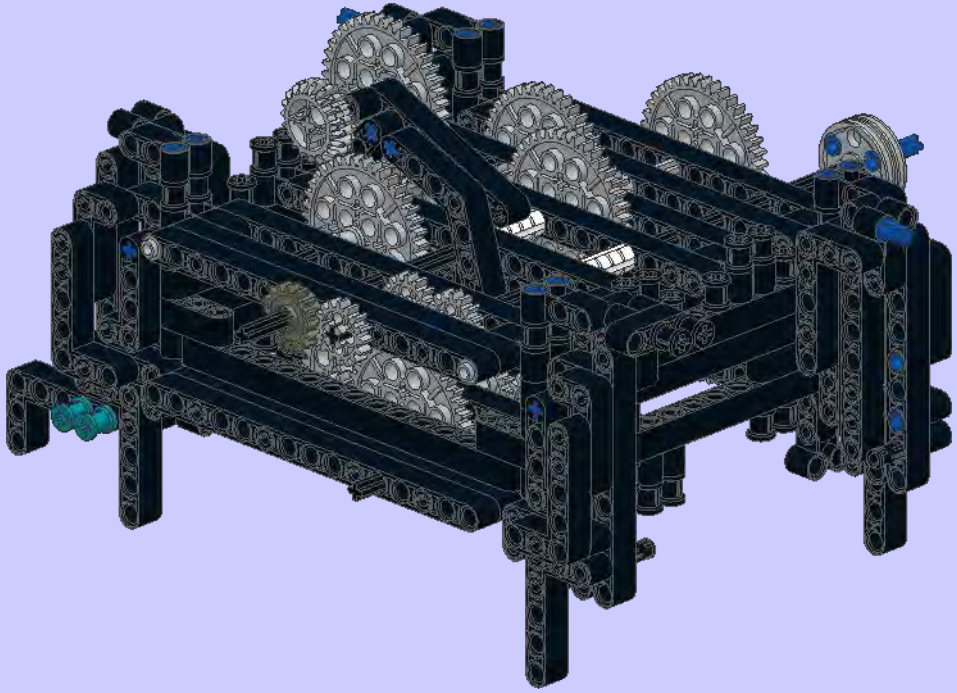

21

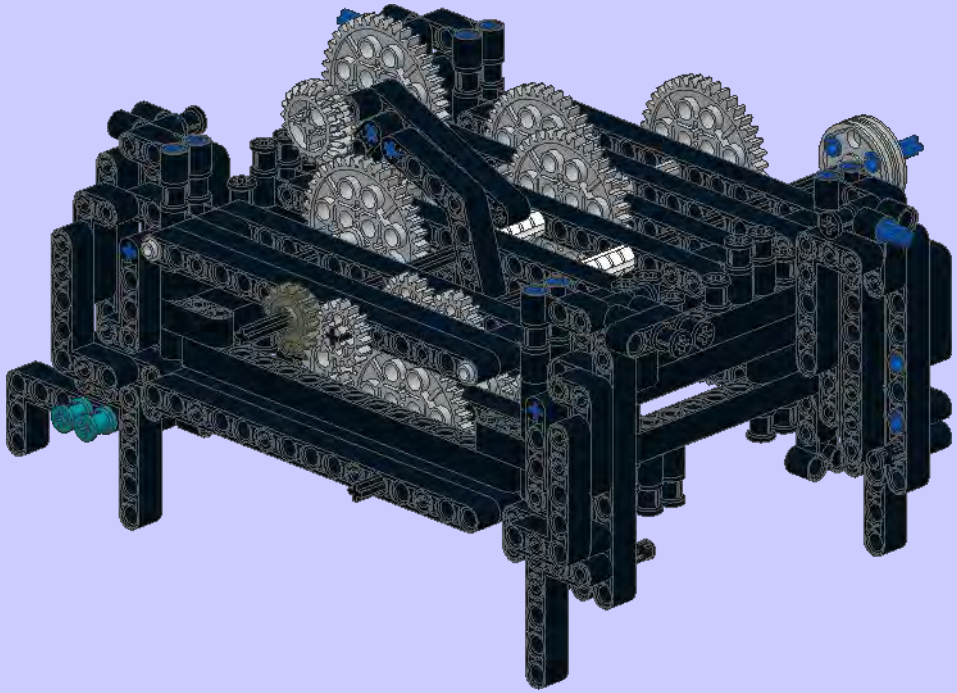

22

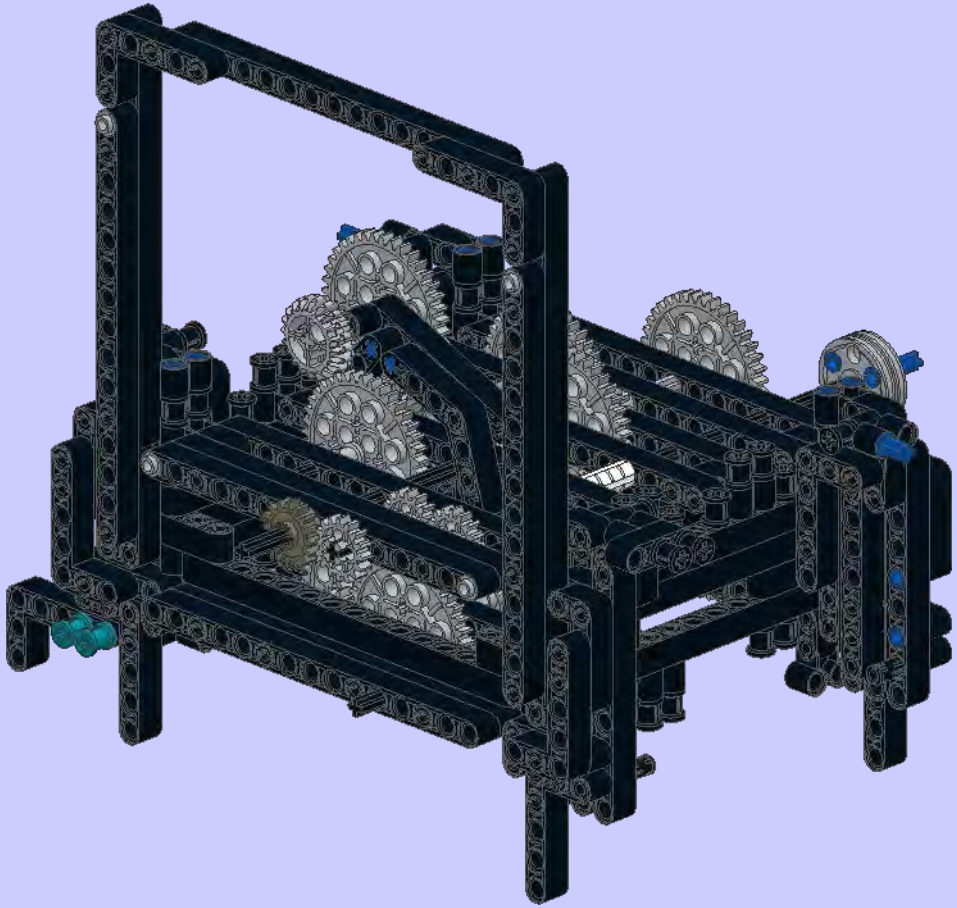

1

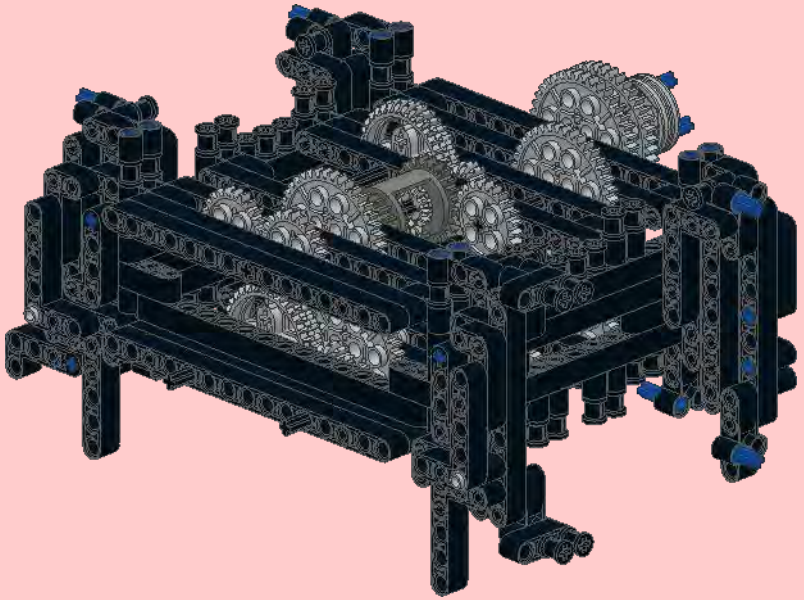

2

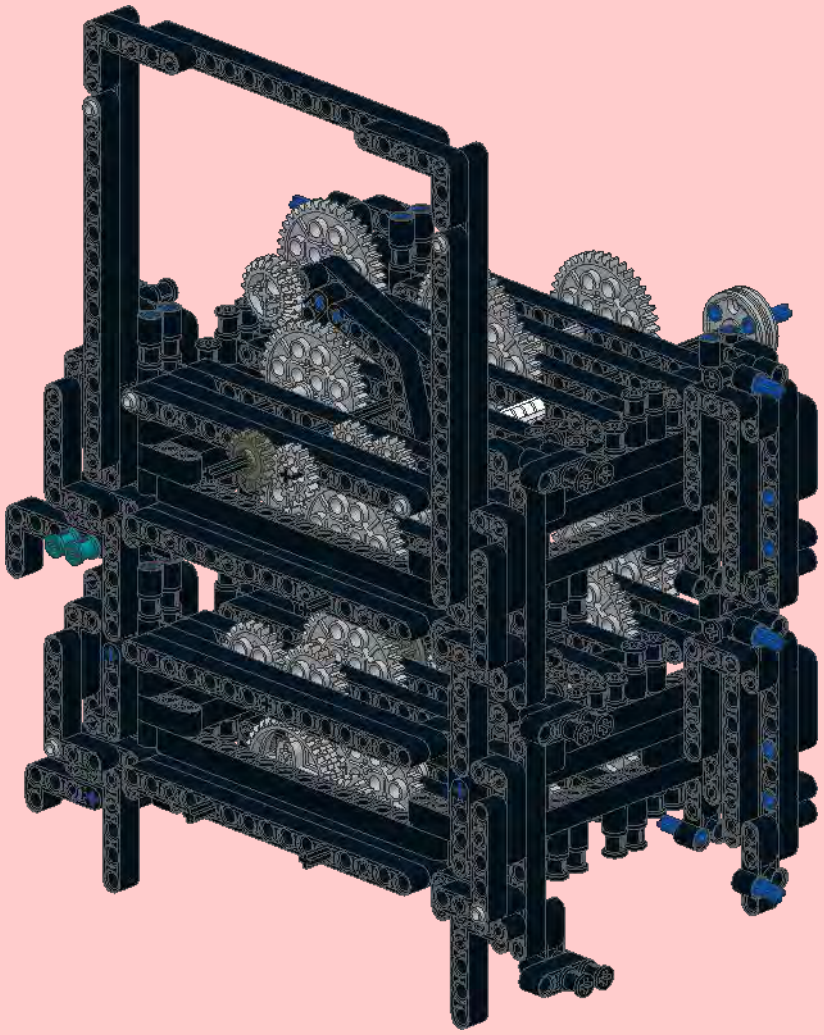

3

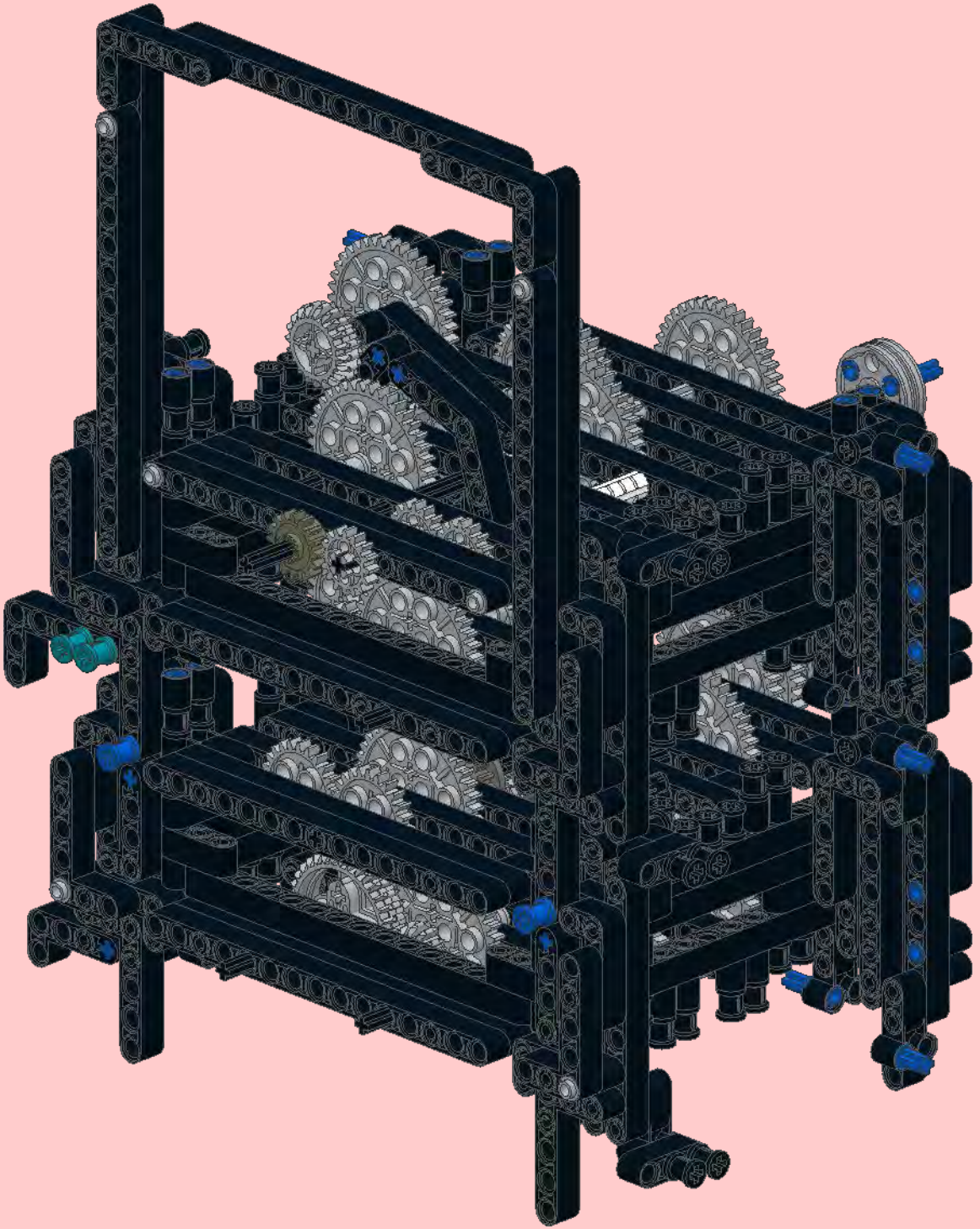

4

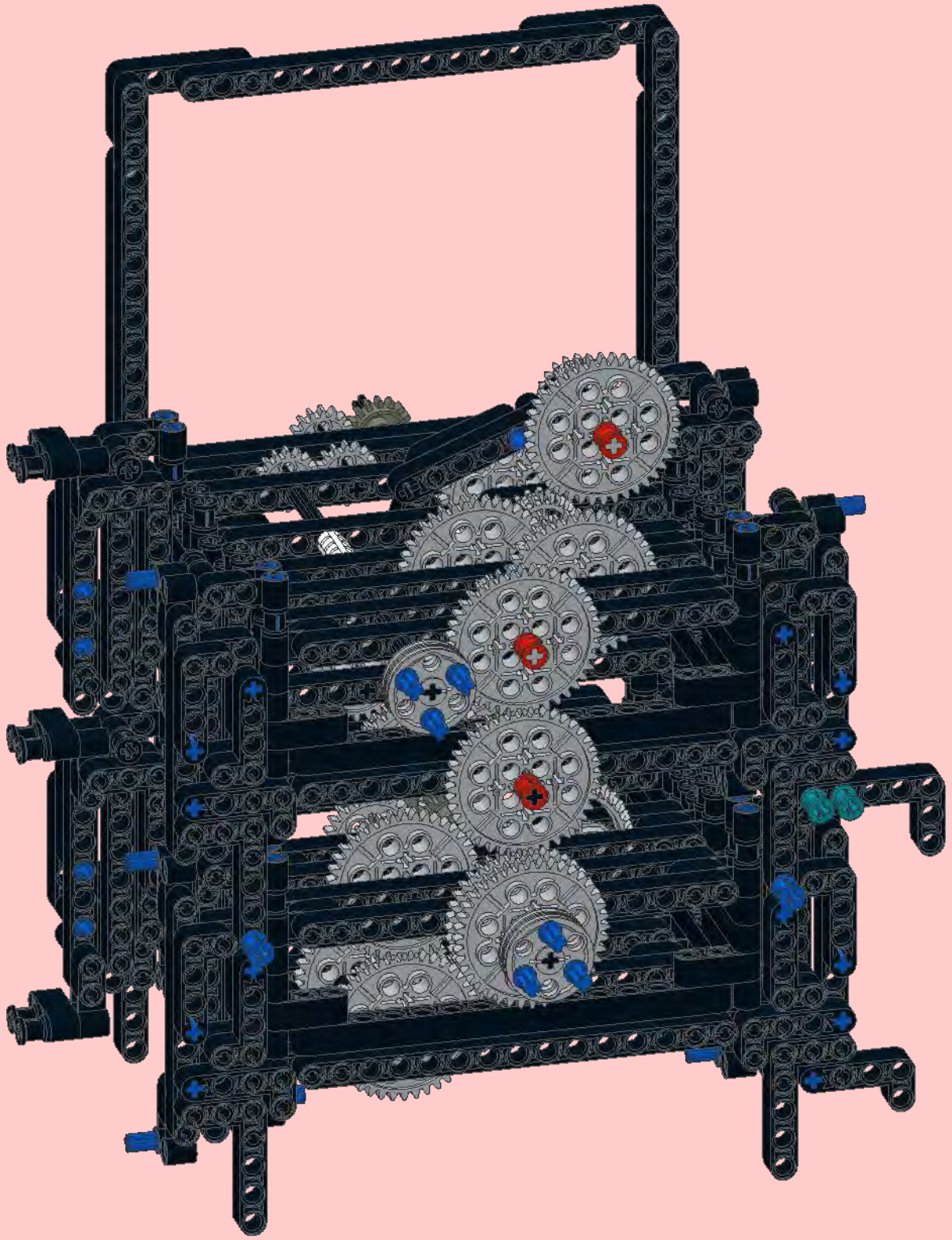

6

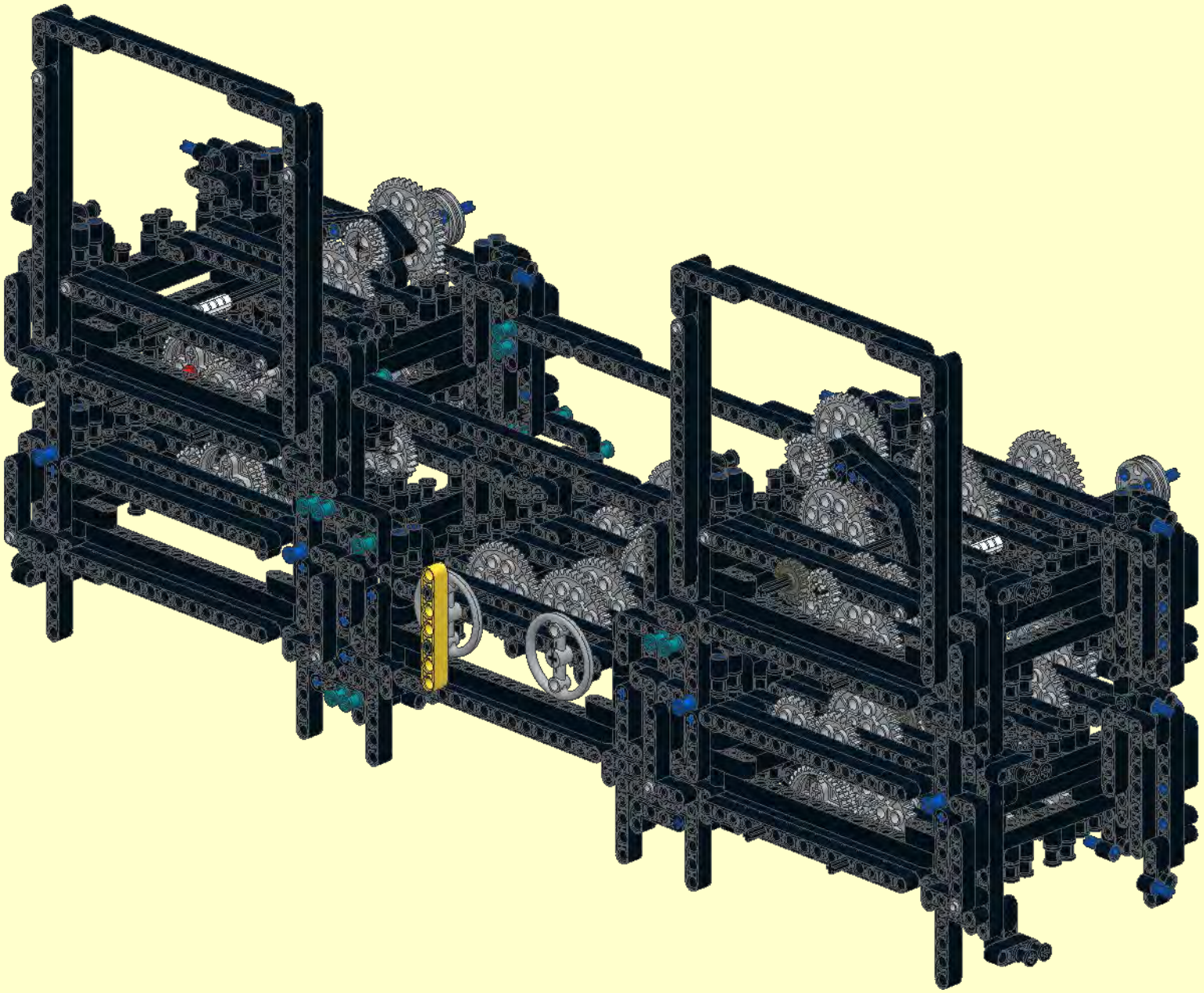

7

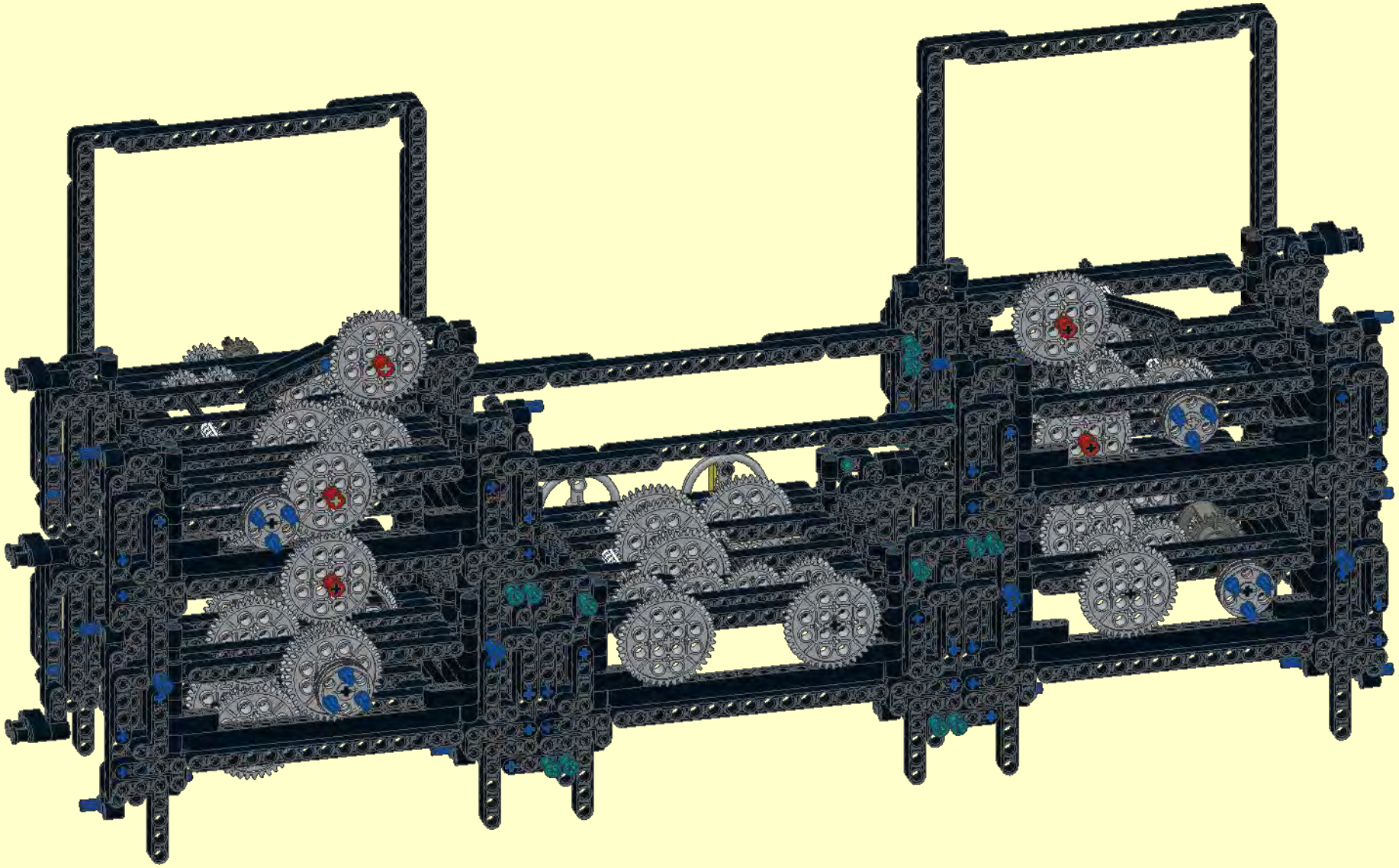

# 8

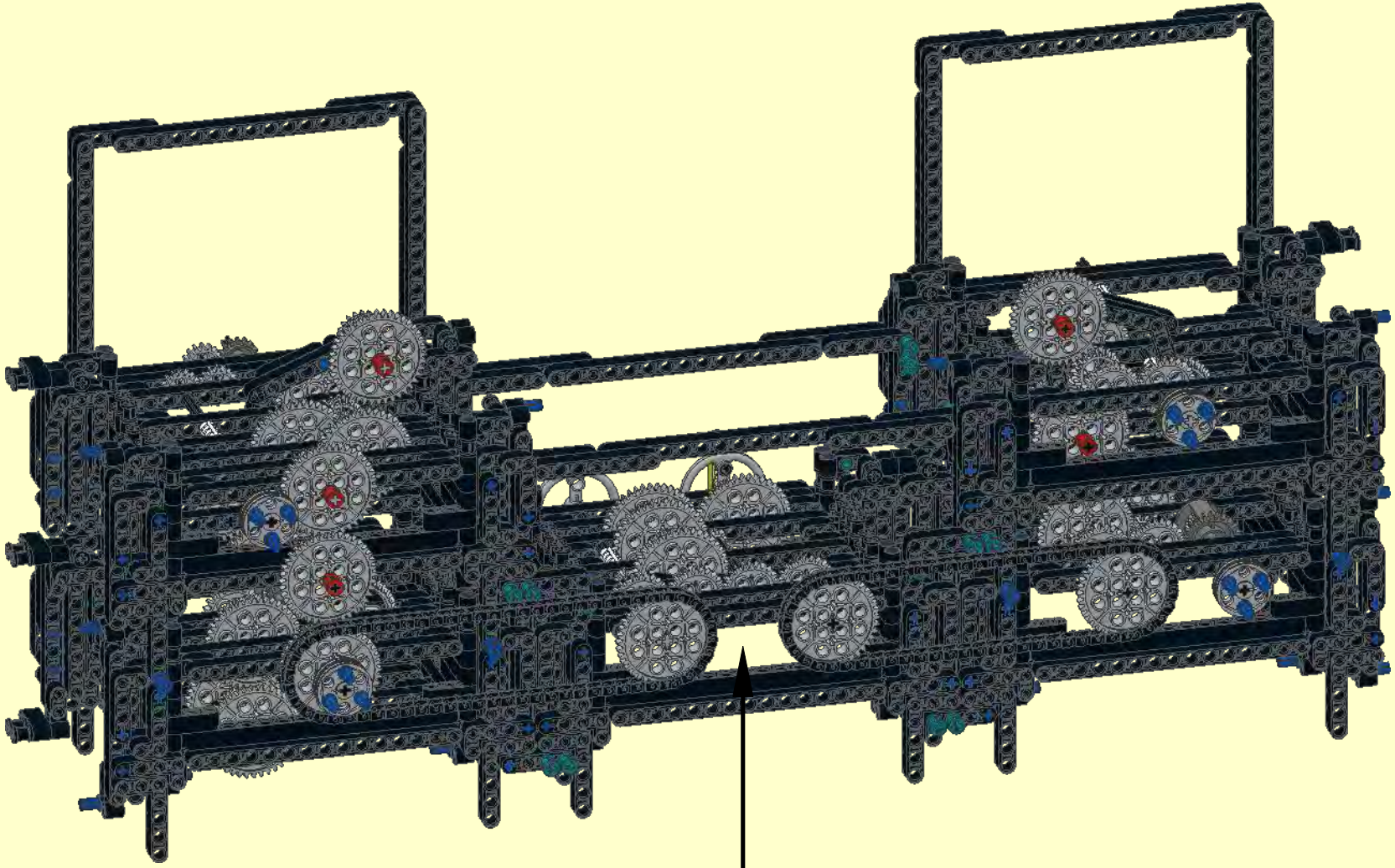

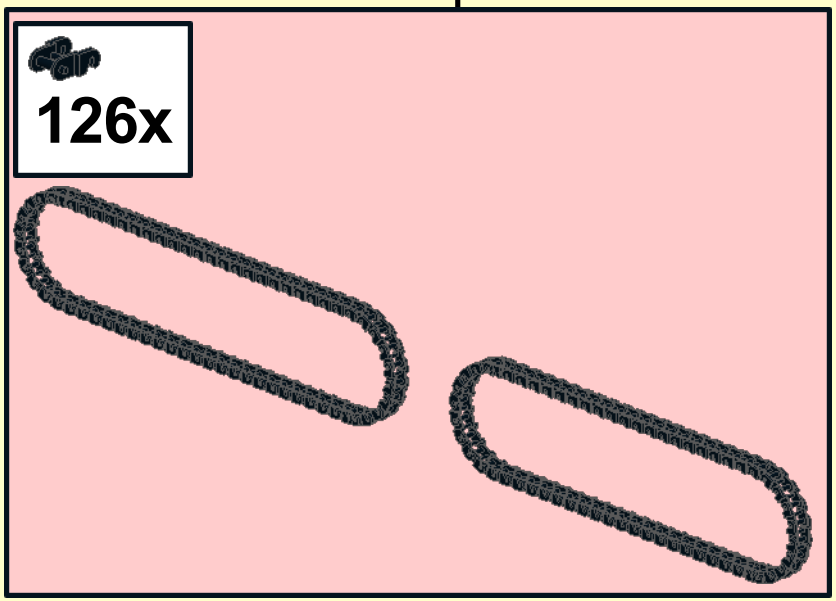

9

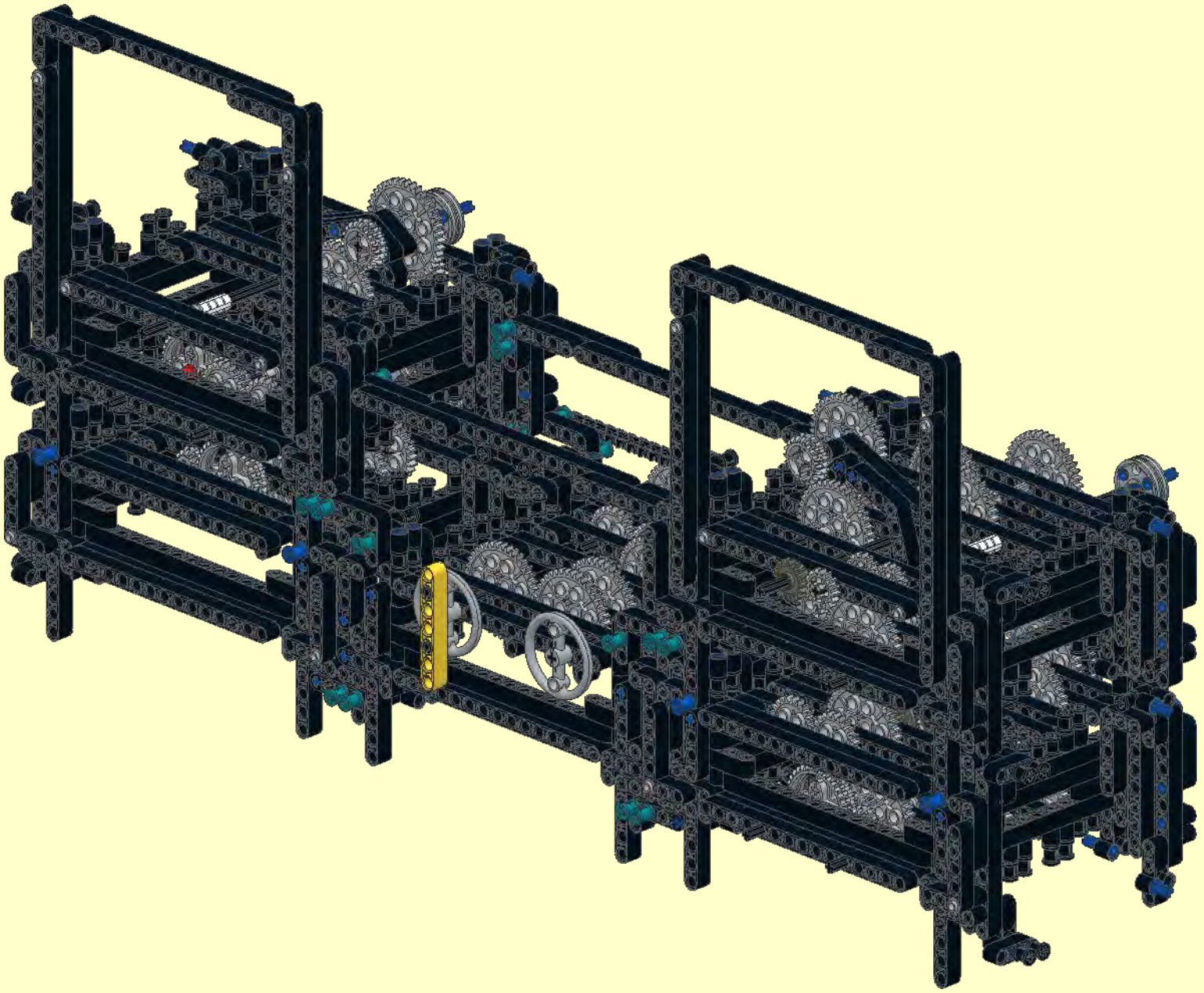

10

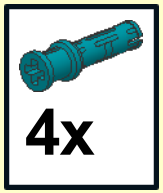


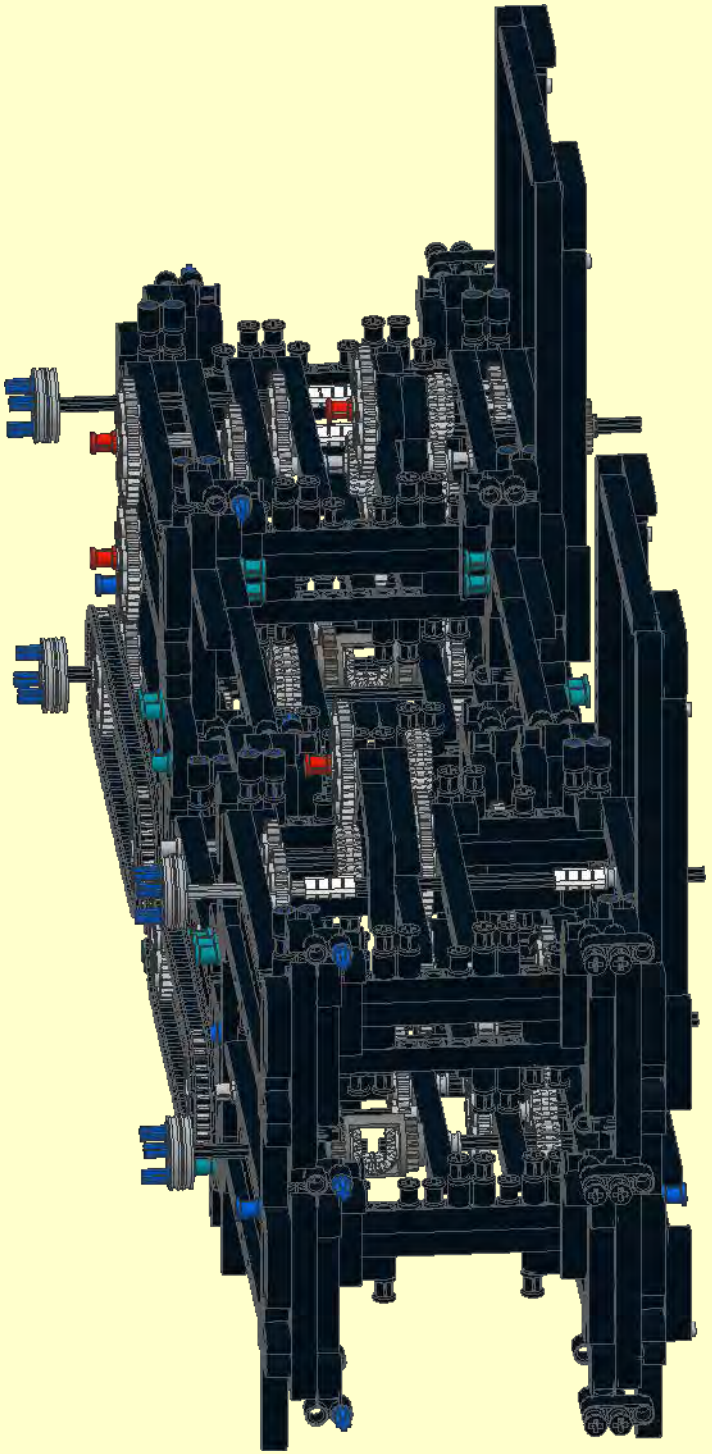

2

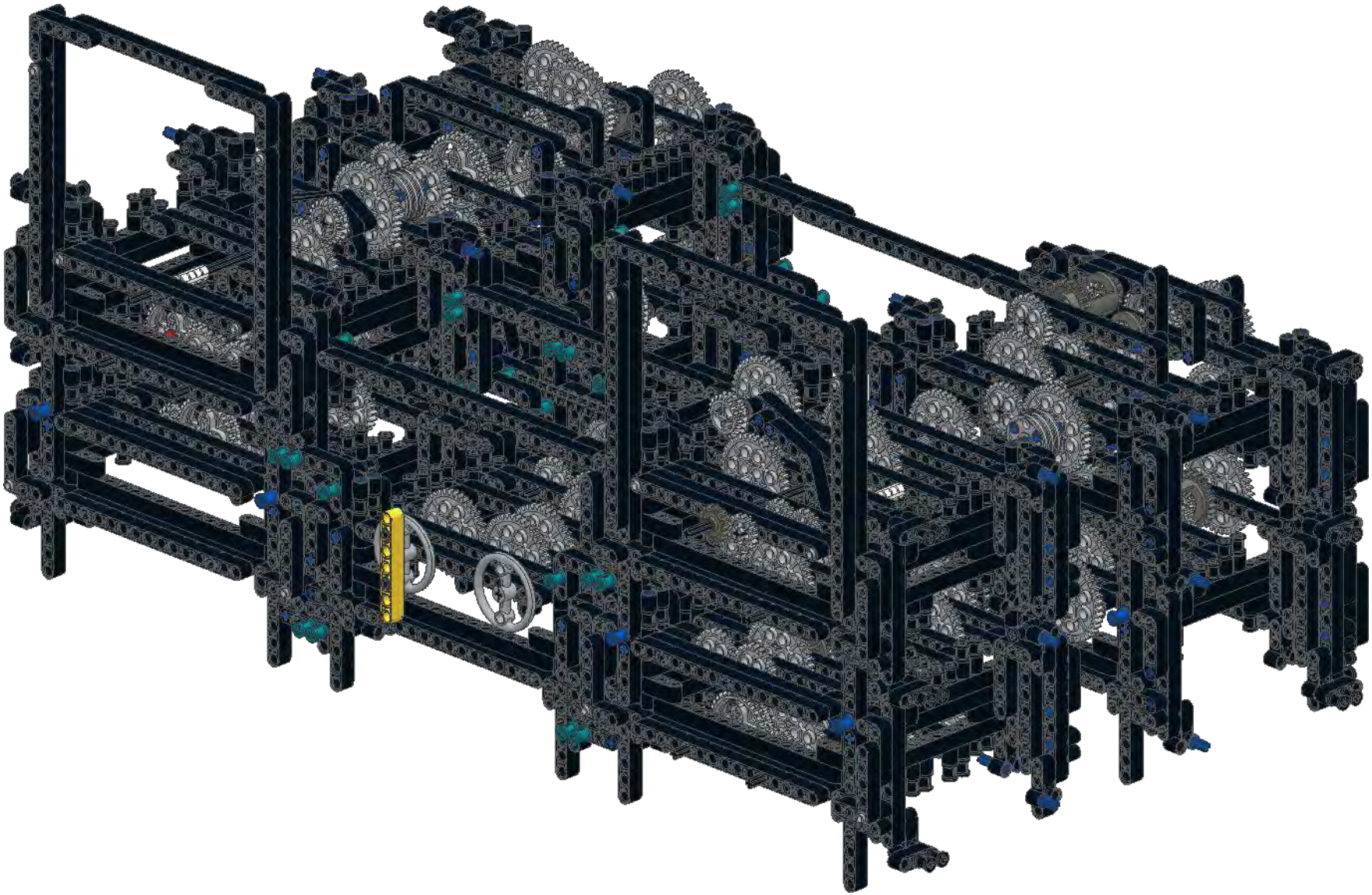

# 3

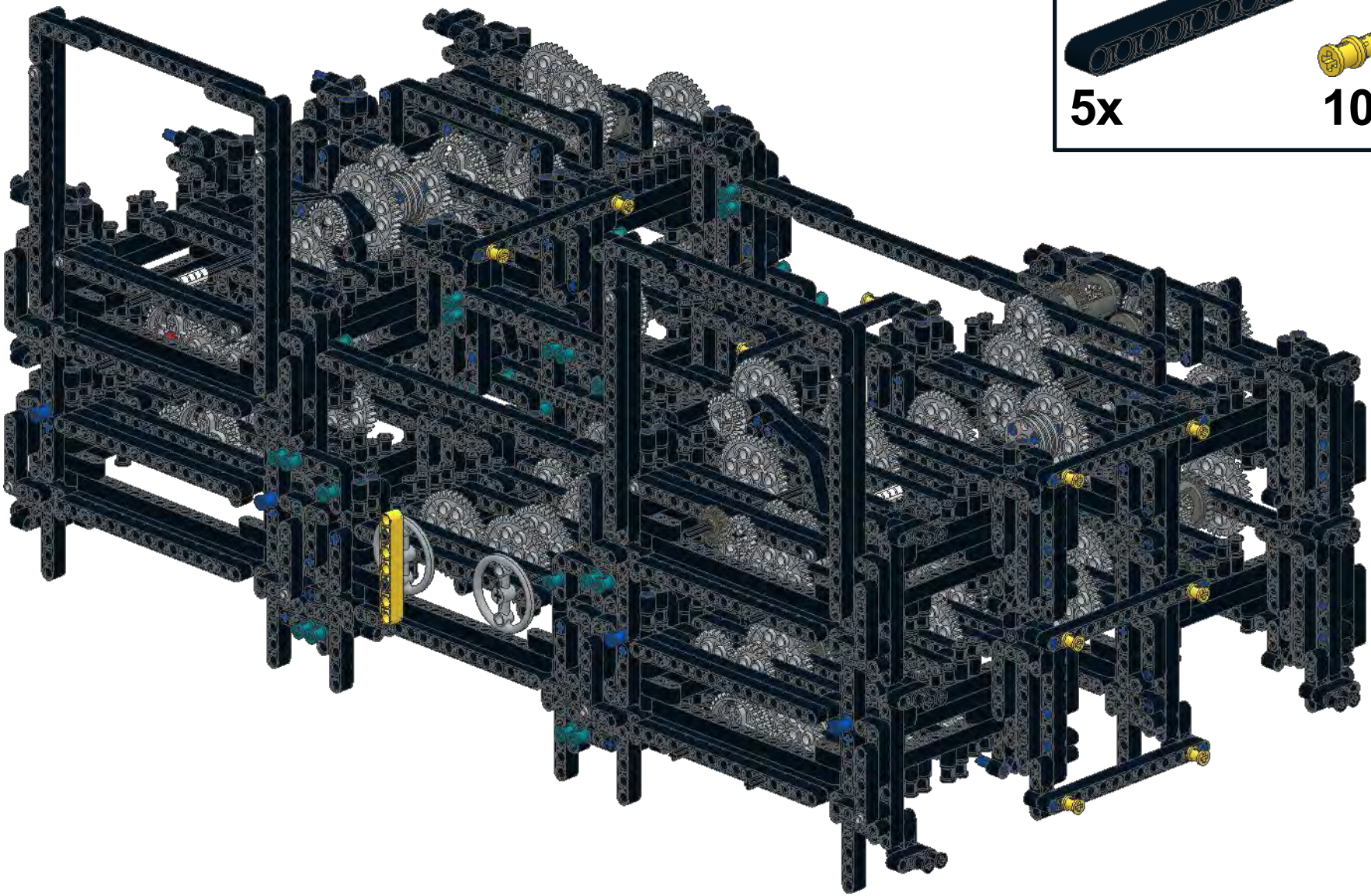

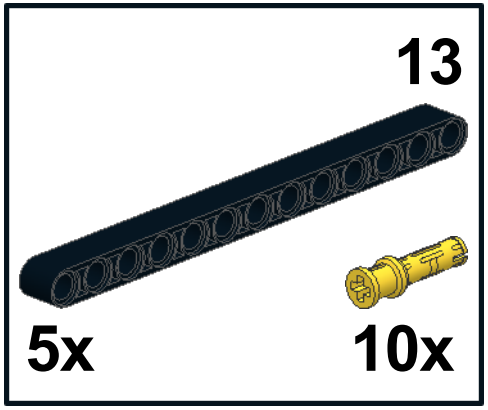

4

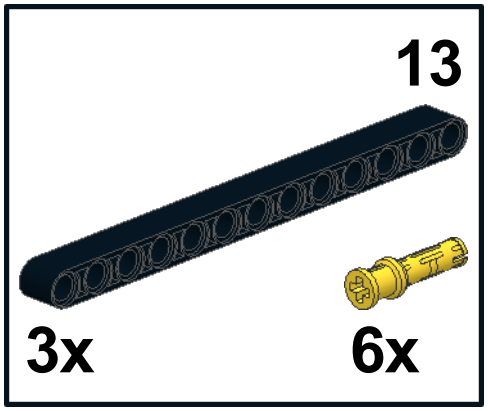


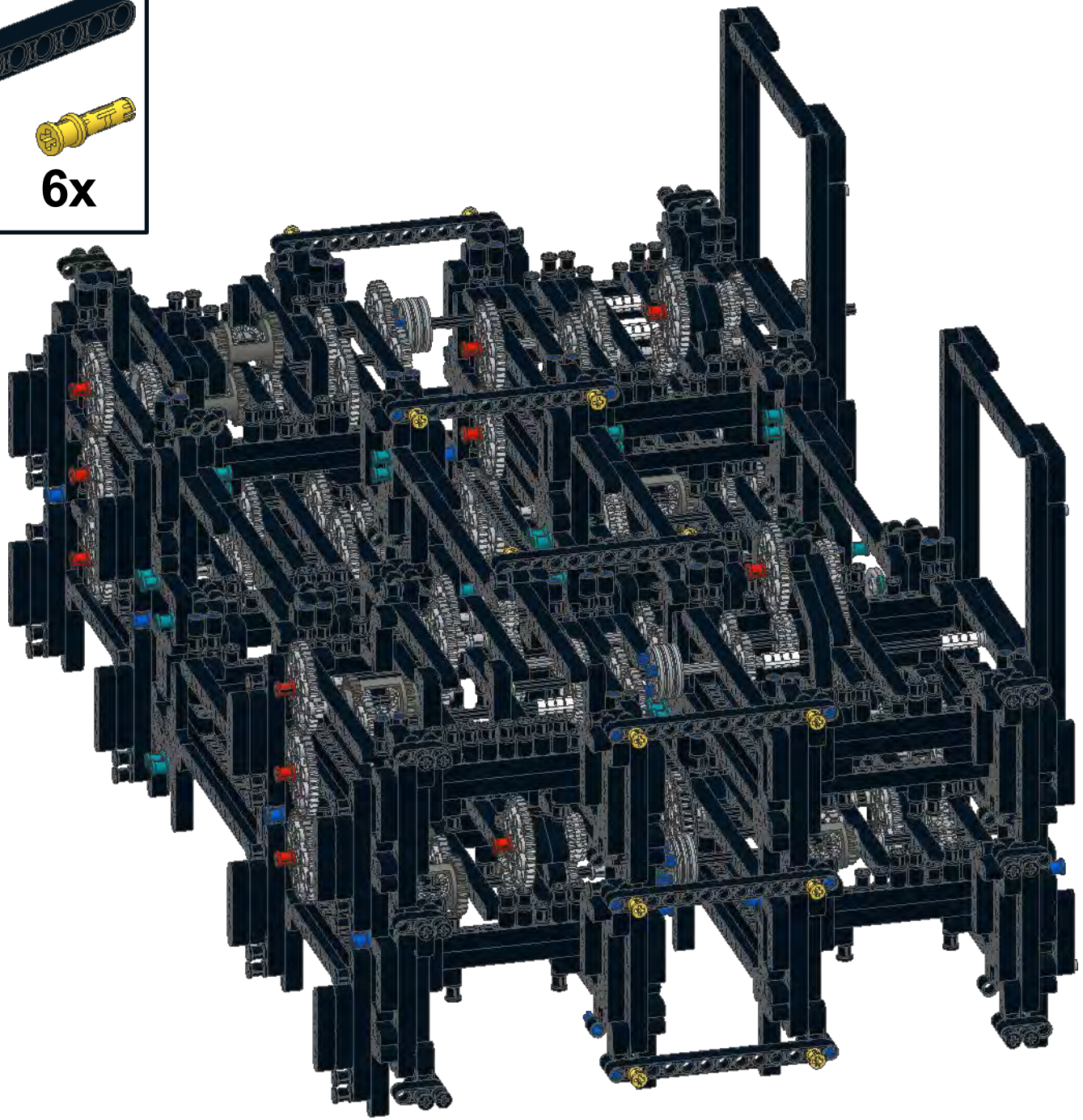

# 5

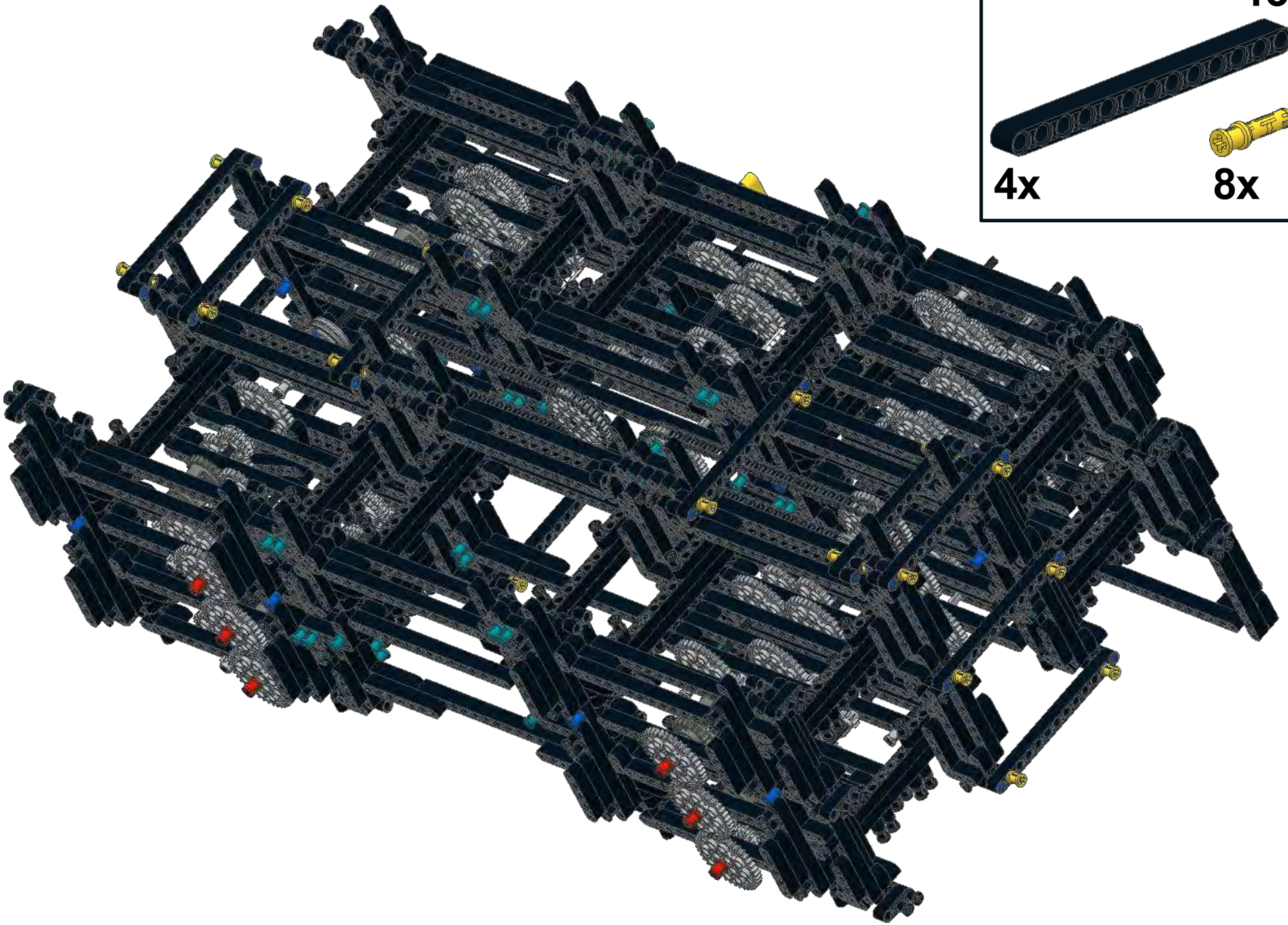

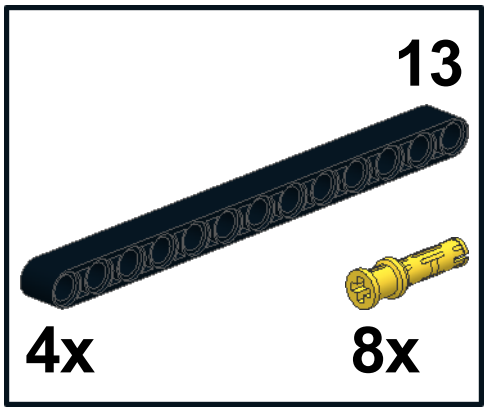

6

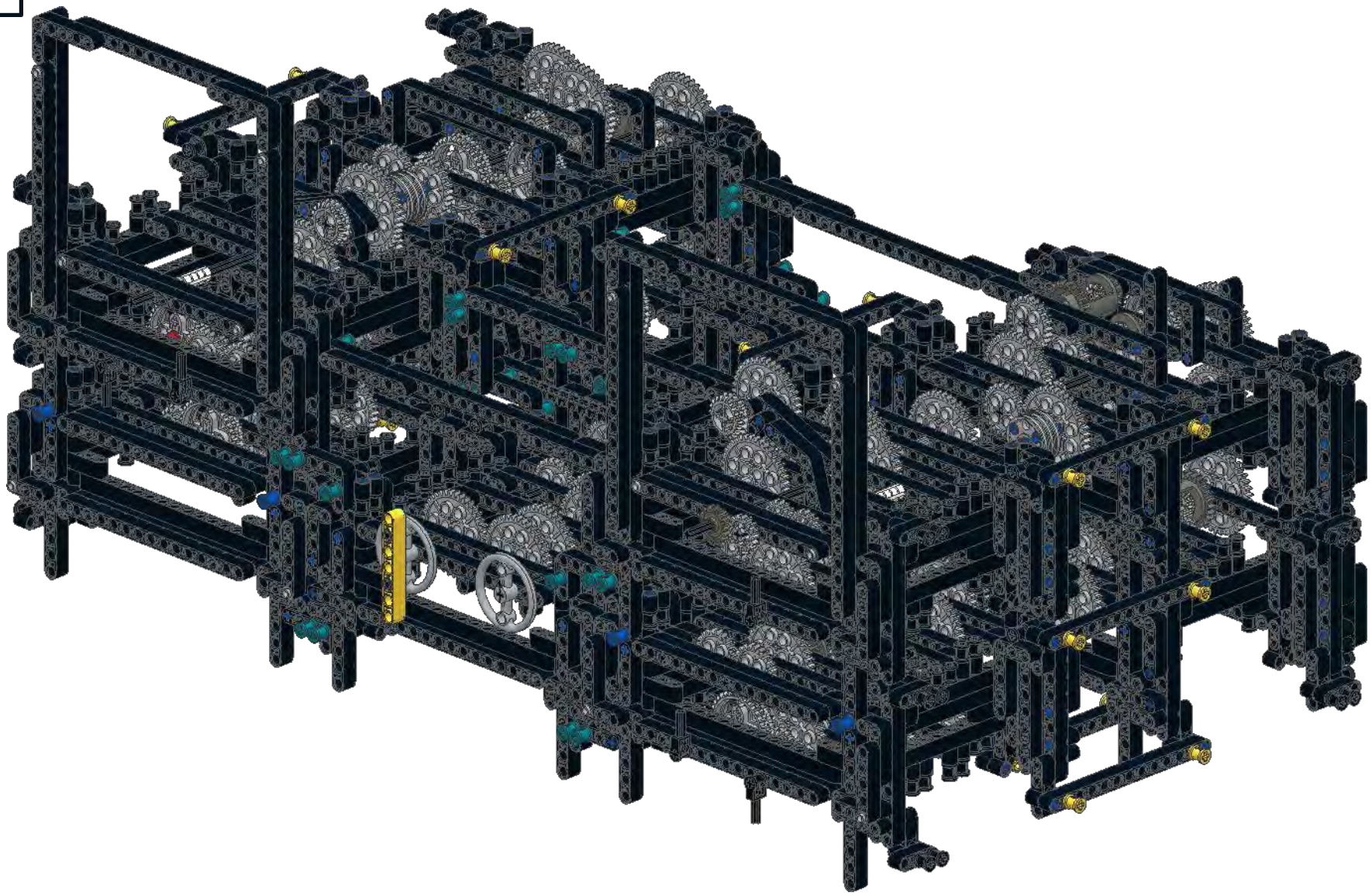

1

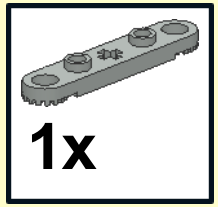


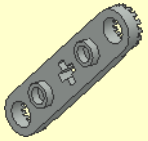

2

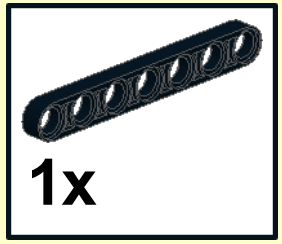

3

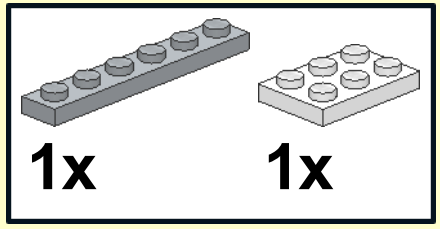


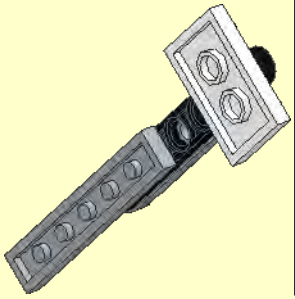

4

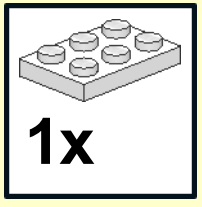


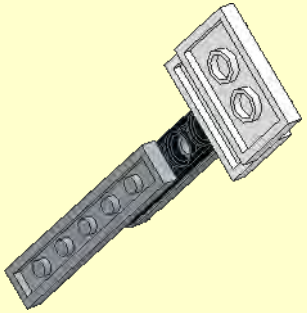

5

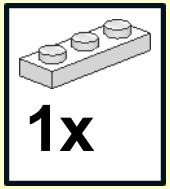


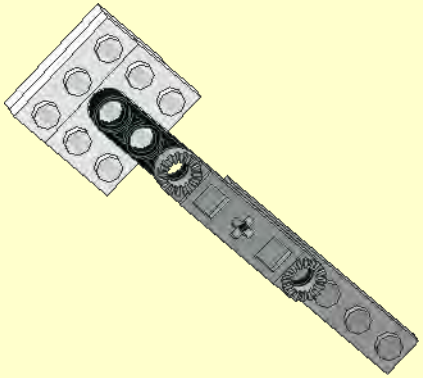

6

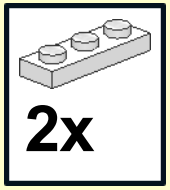


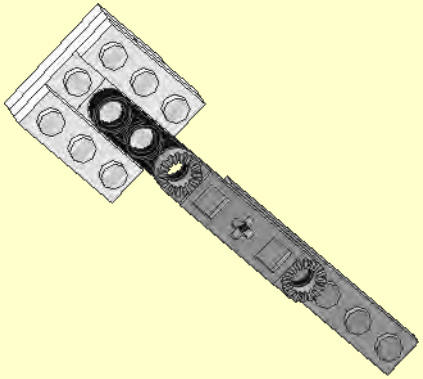

7

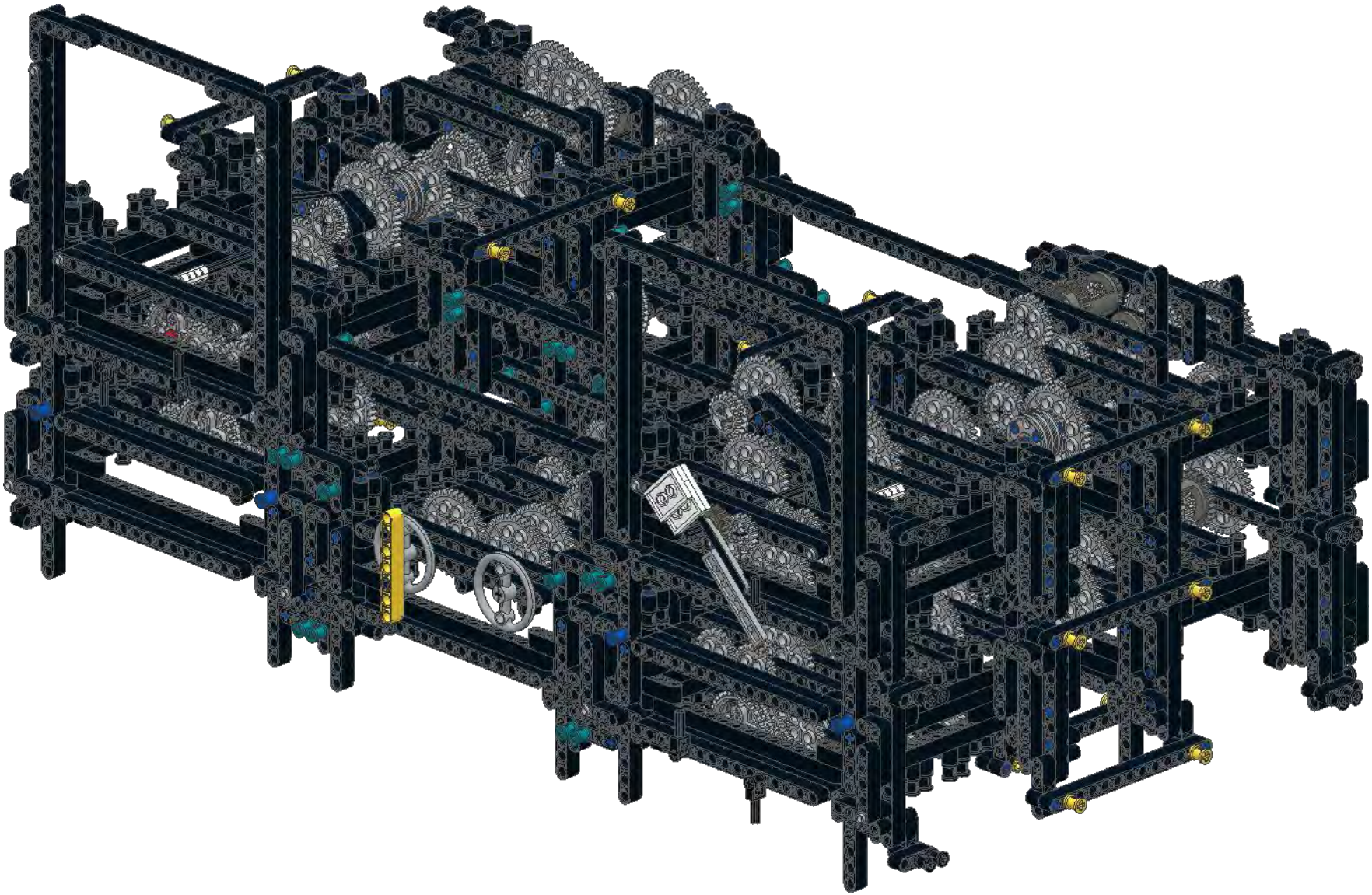

1

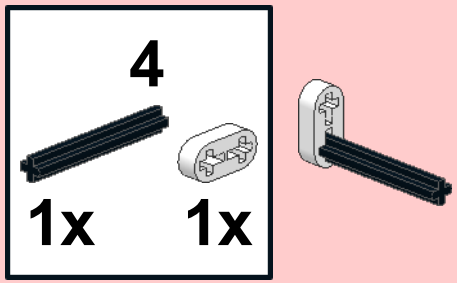


2

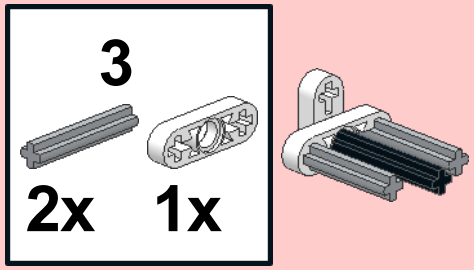


3

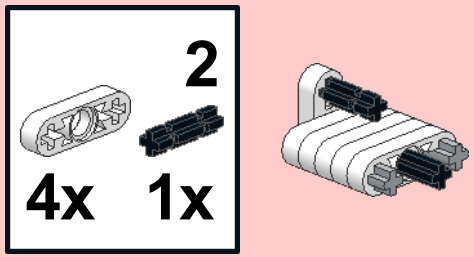

**4**

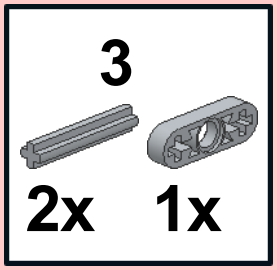


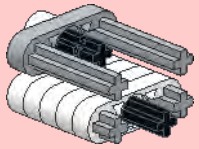

**5**

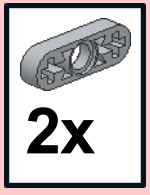


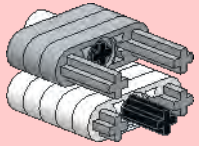

**6**

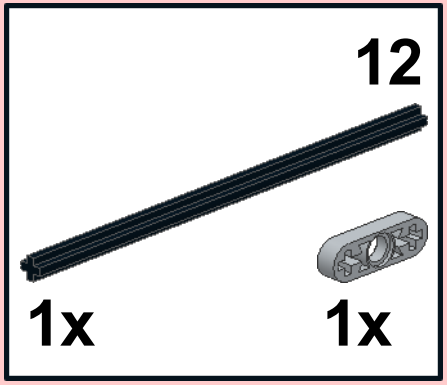


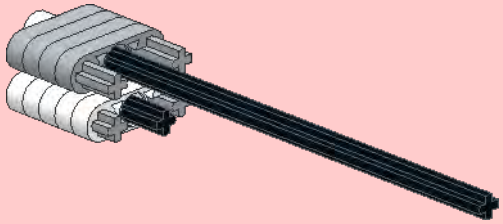

7

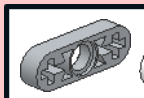


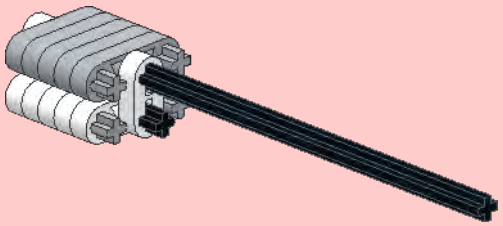

8

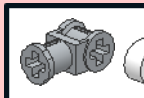


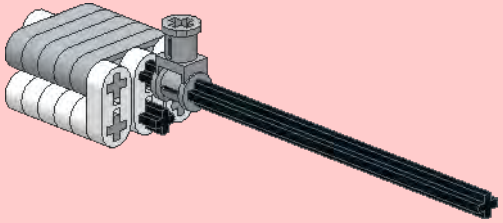

x2

1

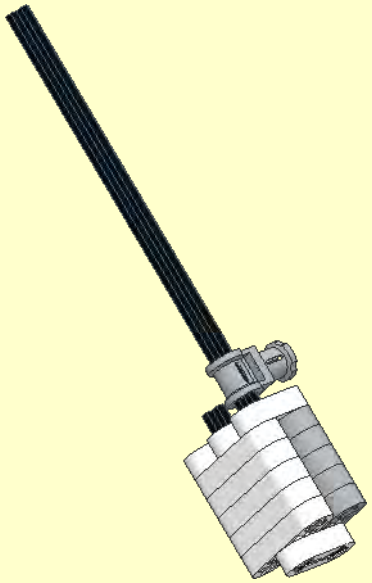

2

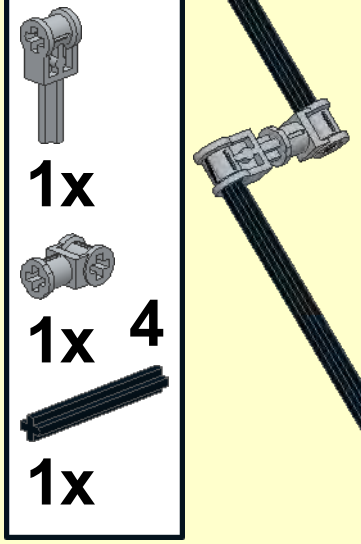


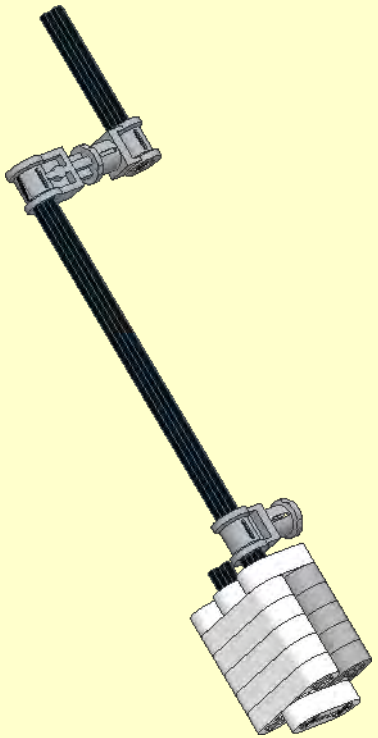

1

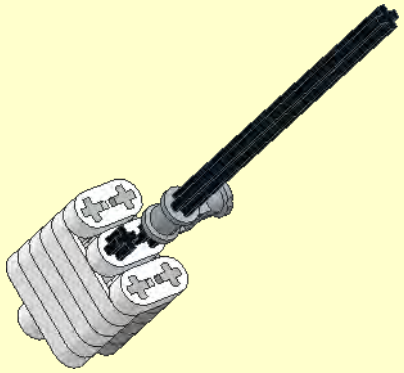

2

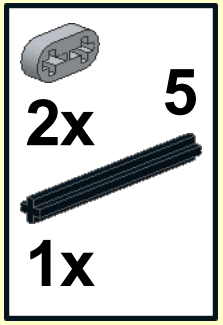


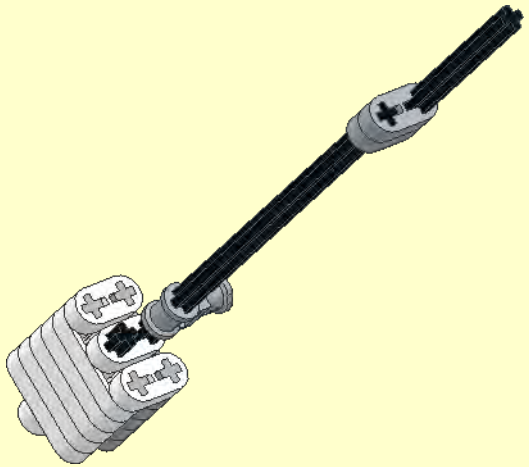

# 8

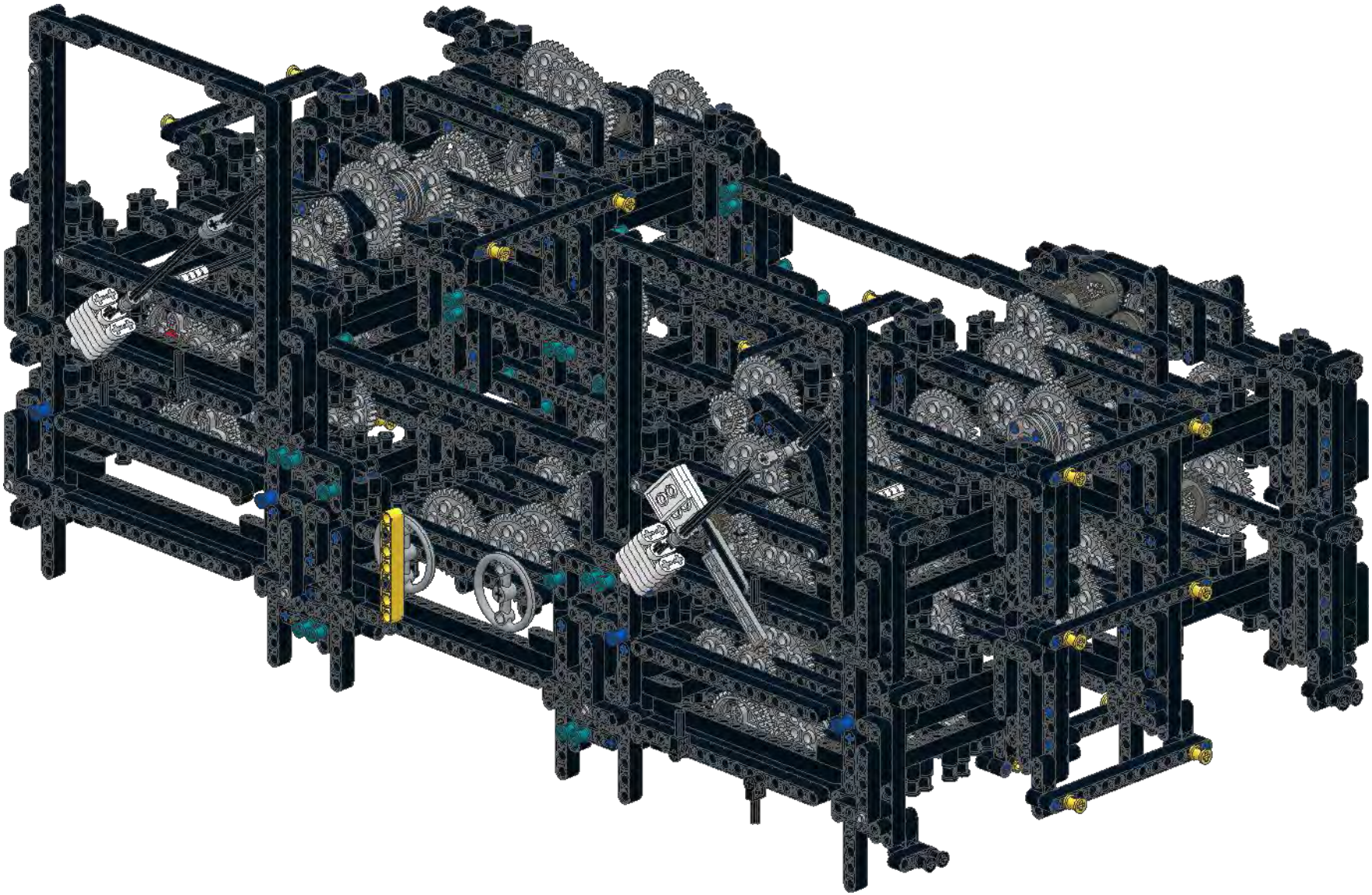

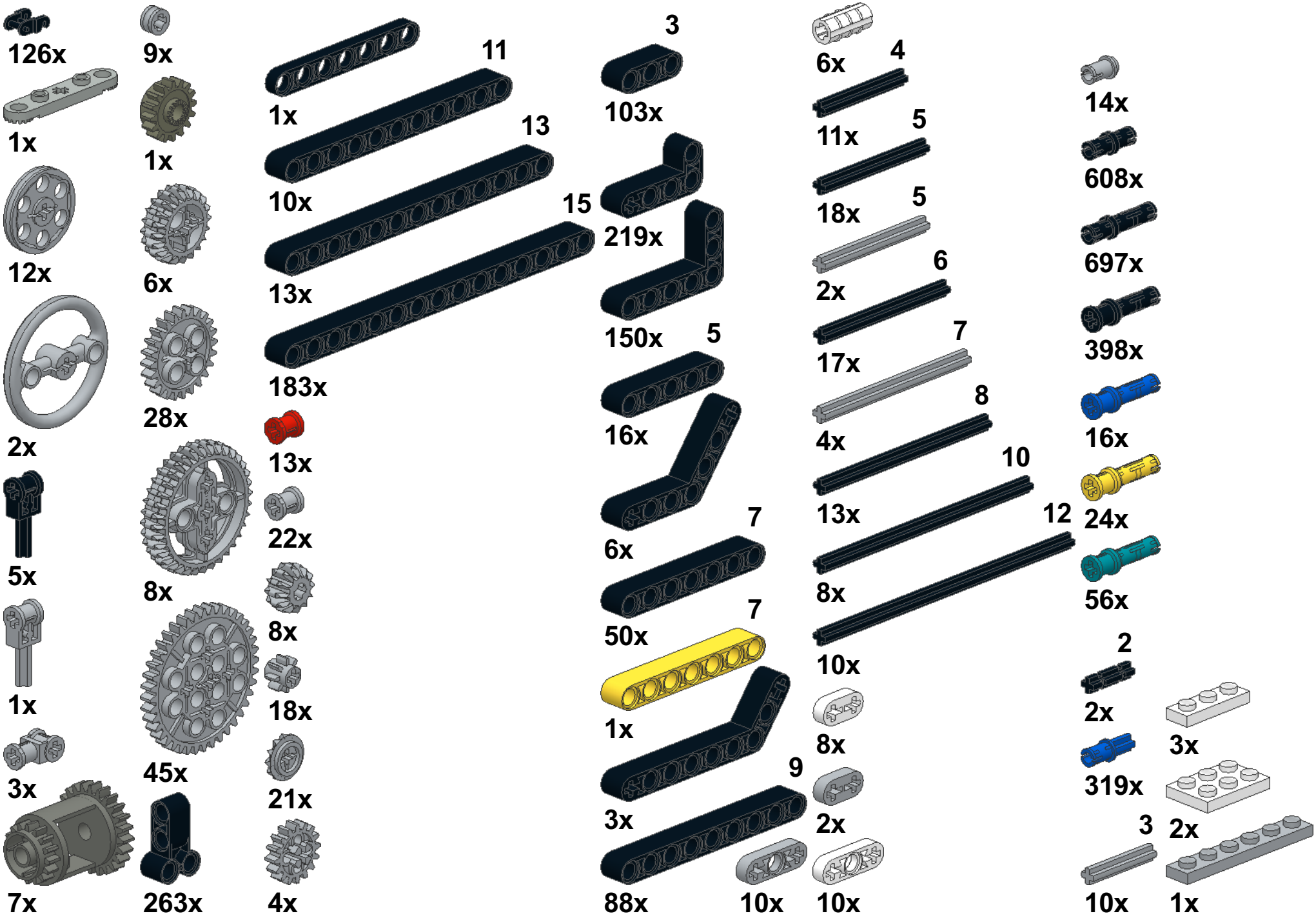
126x
1x
12x
2x
5x
1x
3x
7x
9x
1x
6x
28x
8x
45x
263x
1x
11
10x
13
13x
15
183x
13x
22x
8x
18x
21x
4x
3
103x
219x
150x
5
16x
6x
7
50x
7
1x
3x
9
88x
10x
6x
4
11x
5
18x
5
2x
6
17x
7
4x
8
13x
10
8x
12
10x
8x
2x
10x
14x
608x
697x
398x
16x
24x
56x
2
2x
319x
3
10x
3x
2x
1x

# Antikythera Device

**Design and construction by Andrew Carrol.**
**Model instructions by Sean Turner**

**3715 Pieces**

**Lego model of the astronomical device found off the coast of the island of Antikythera over 100 years ago.**

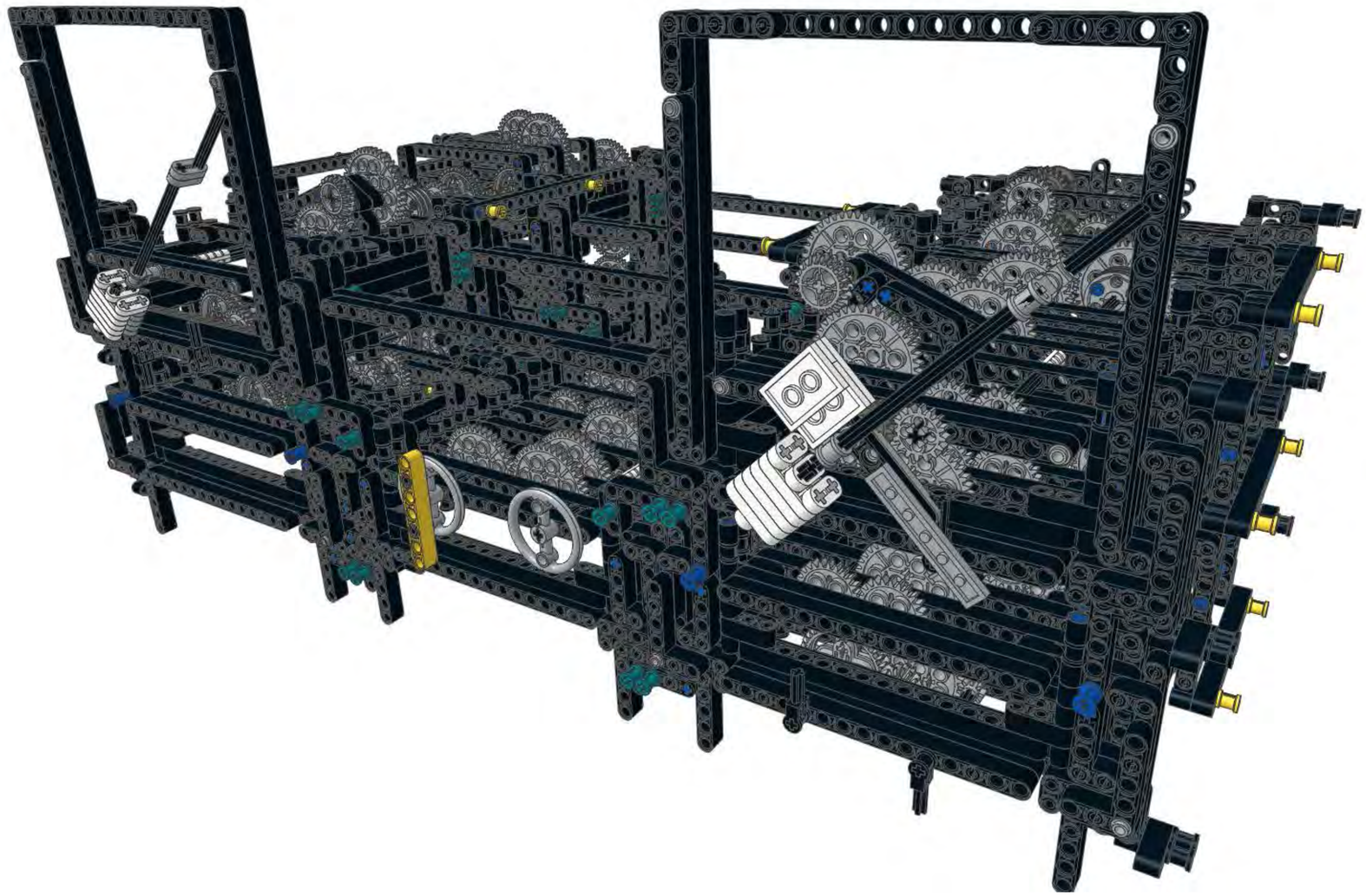

# "Left" legs - 20 required

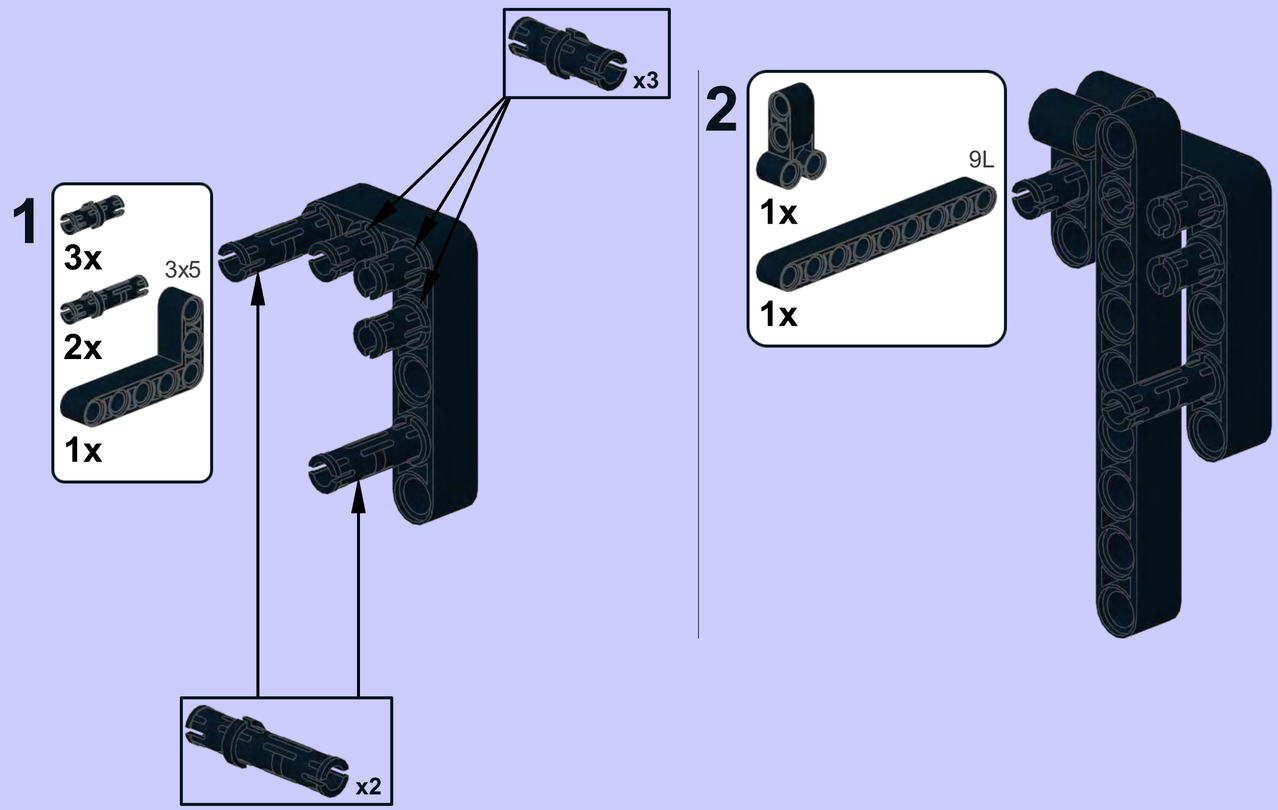

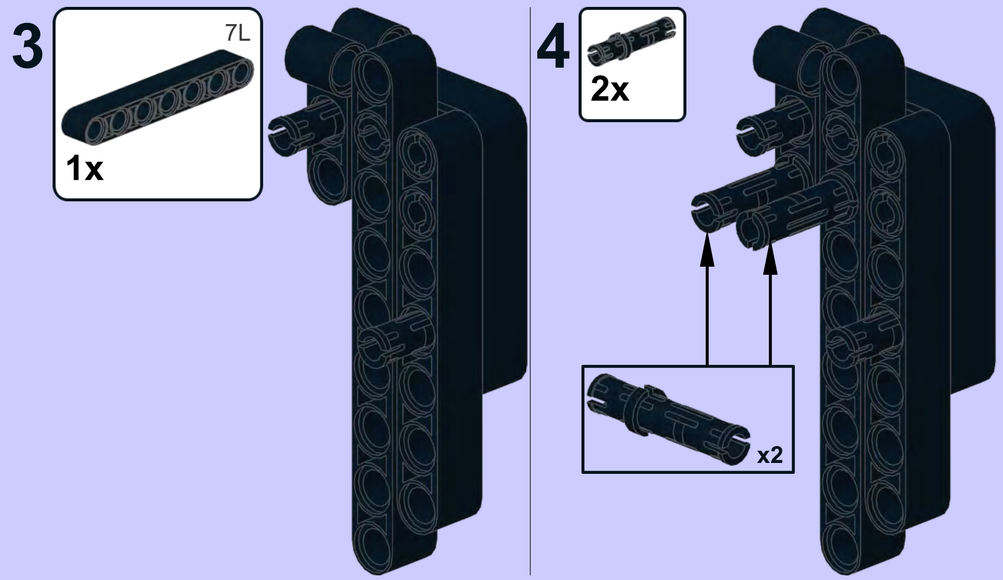
3
7L
1x
4
2x
x2

5

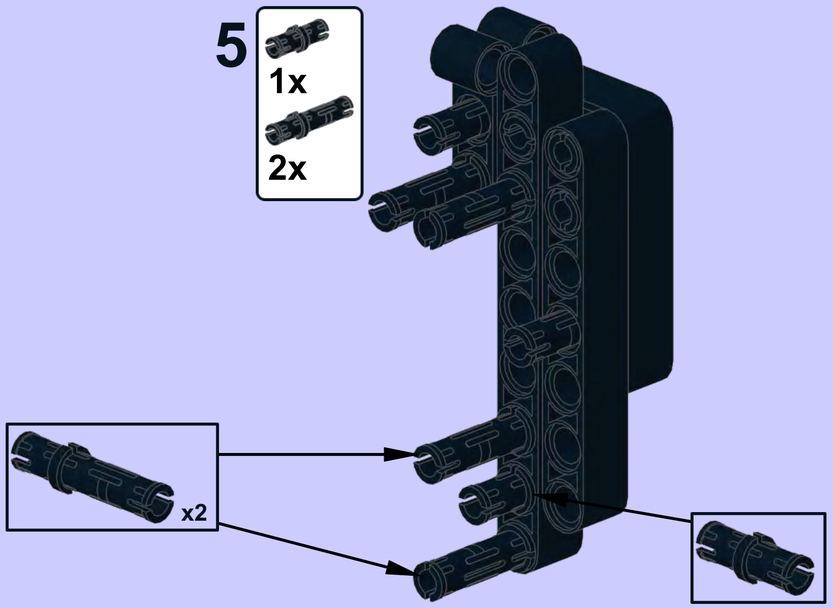


6

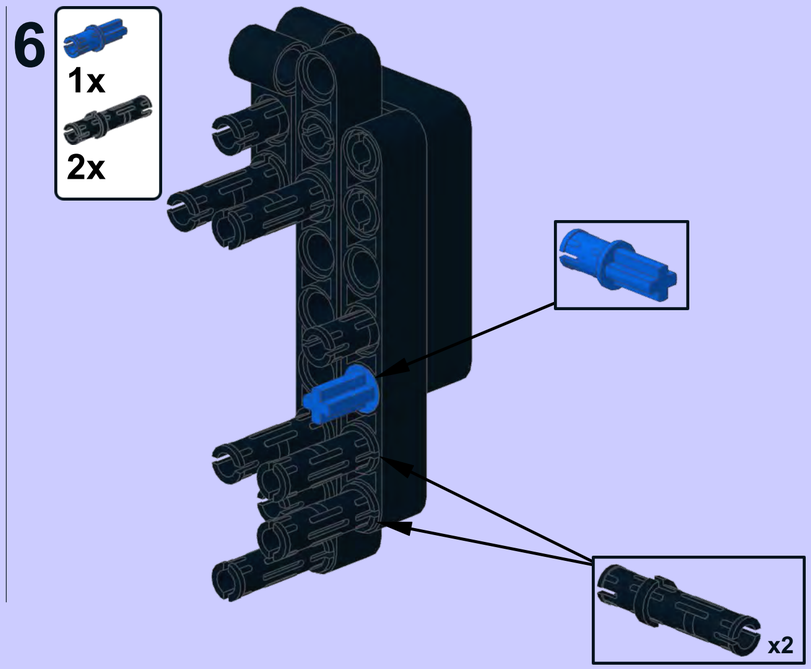

7

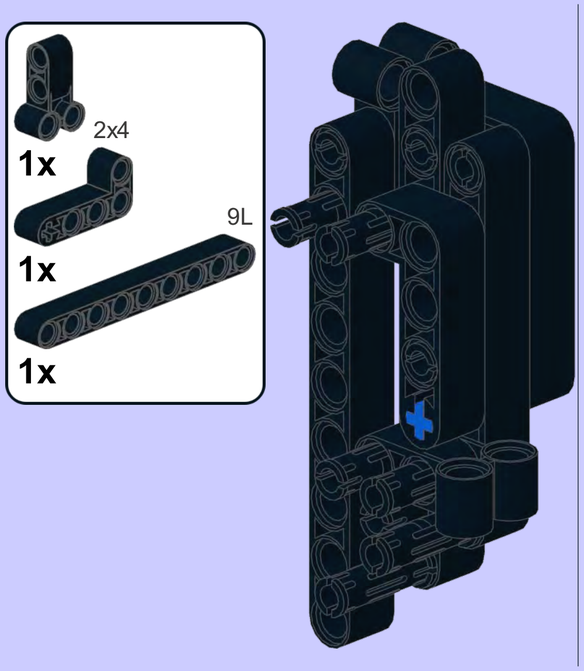


8

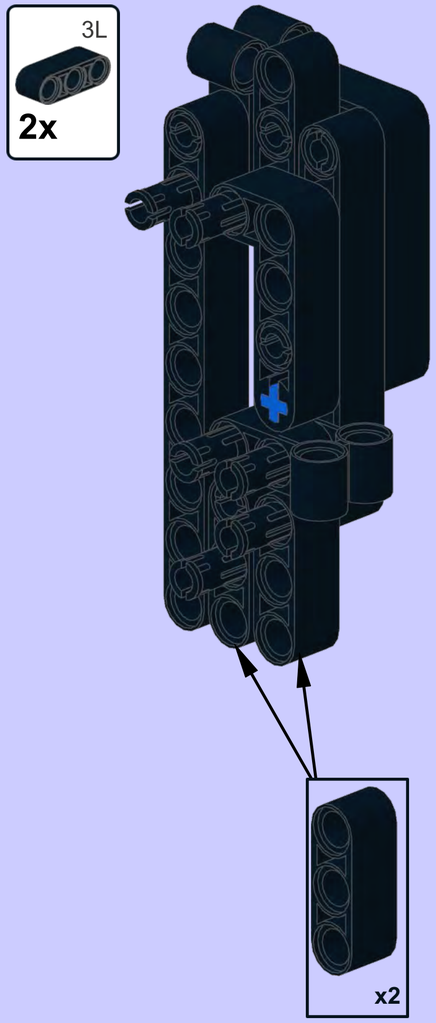

9

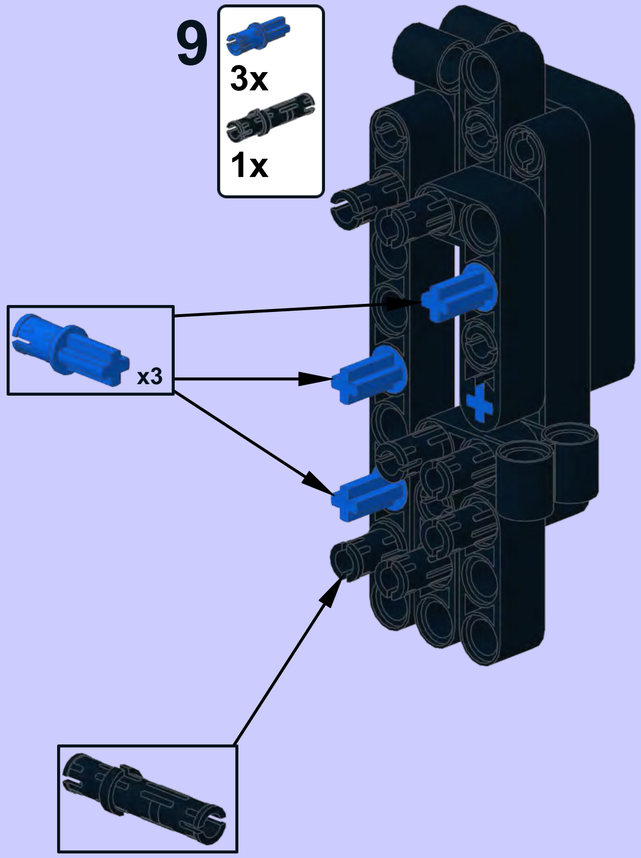


10

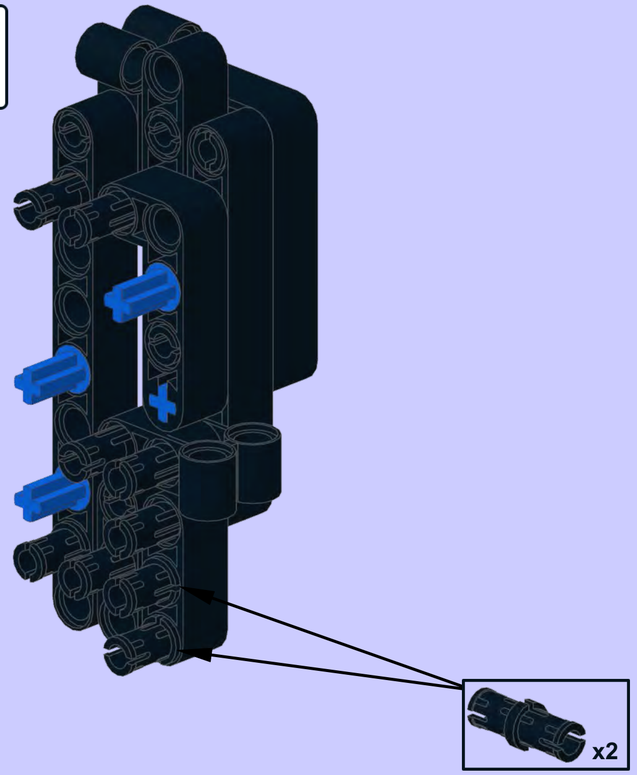

11

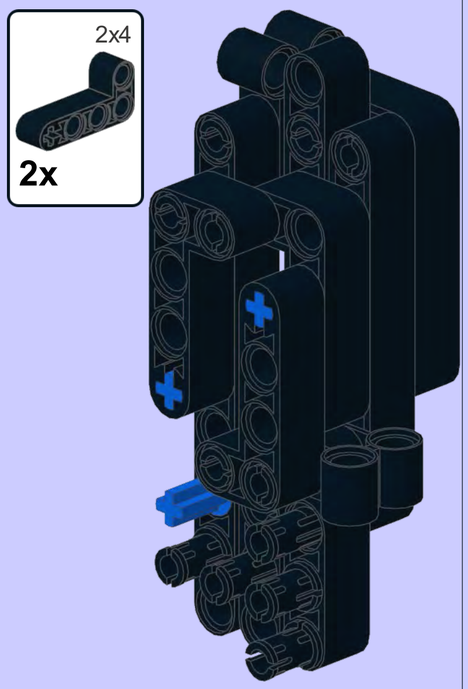


12

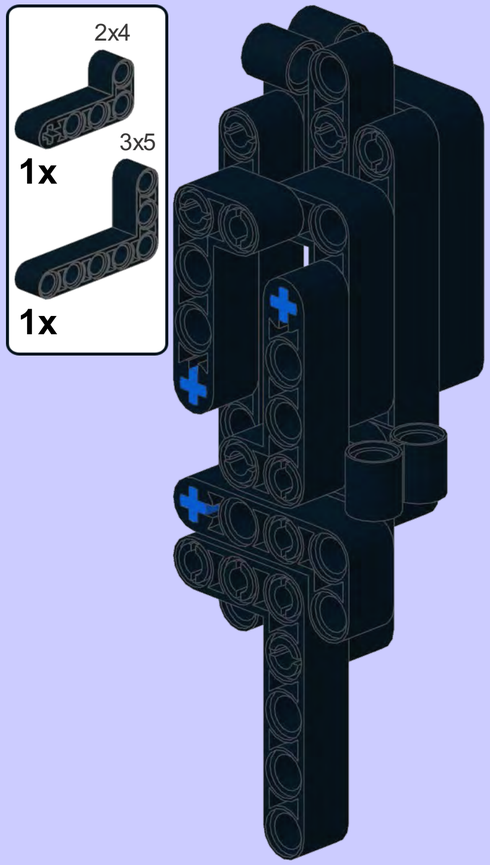

13

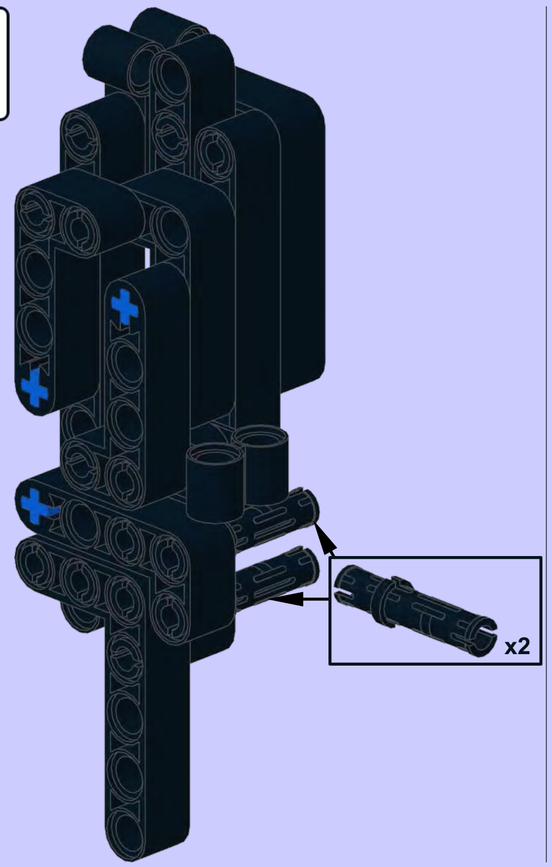


14

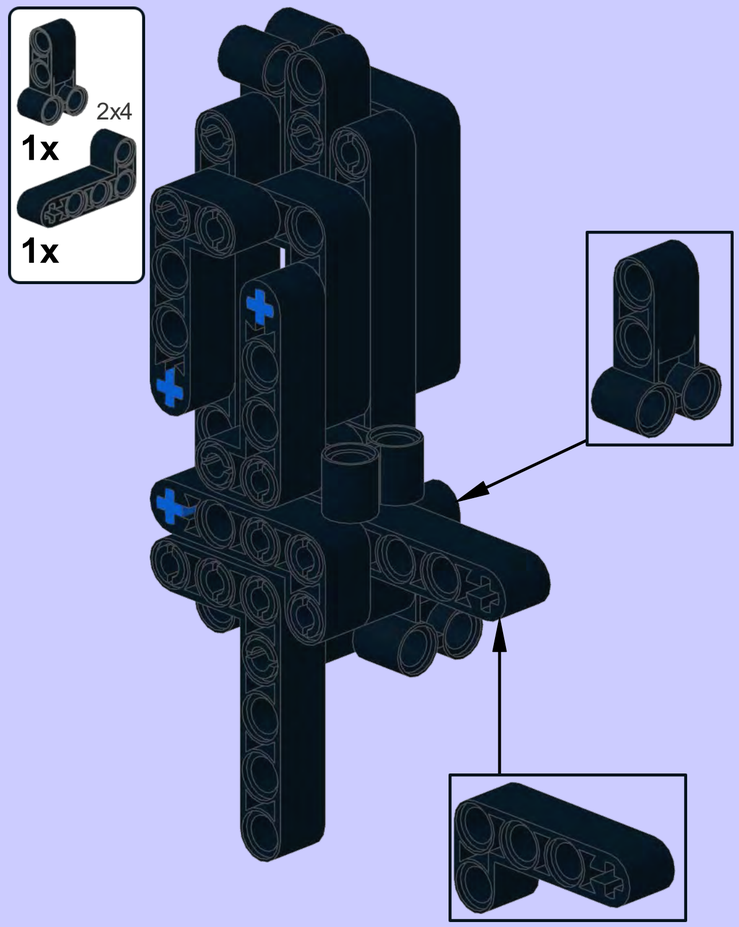


x20

## "Right" legs - 20 required

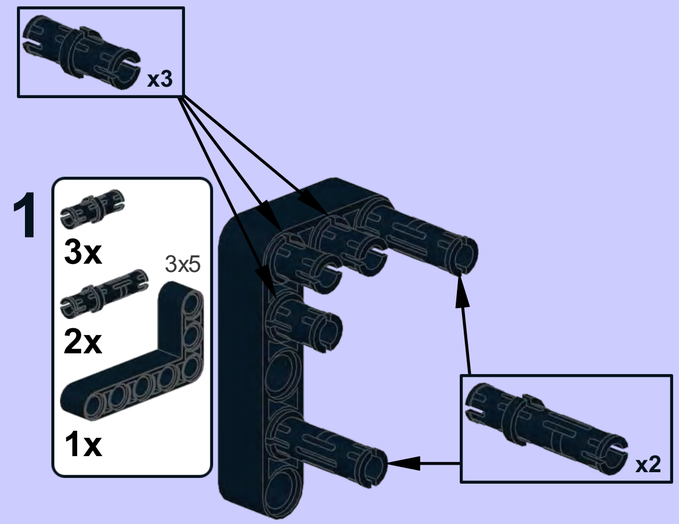


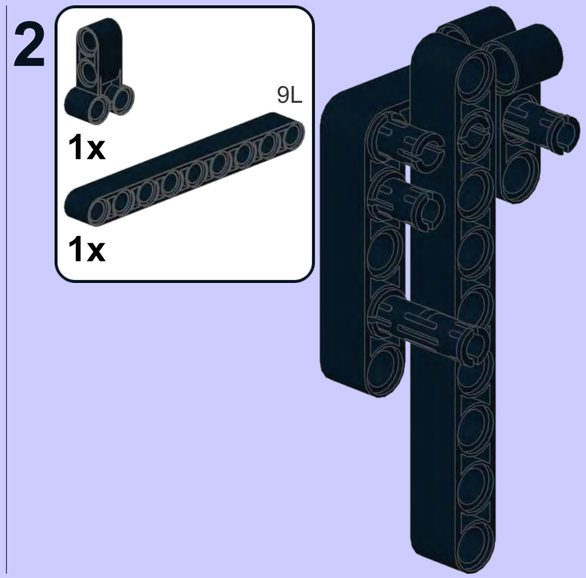

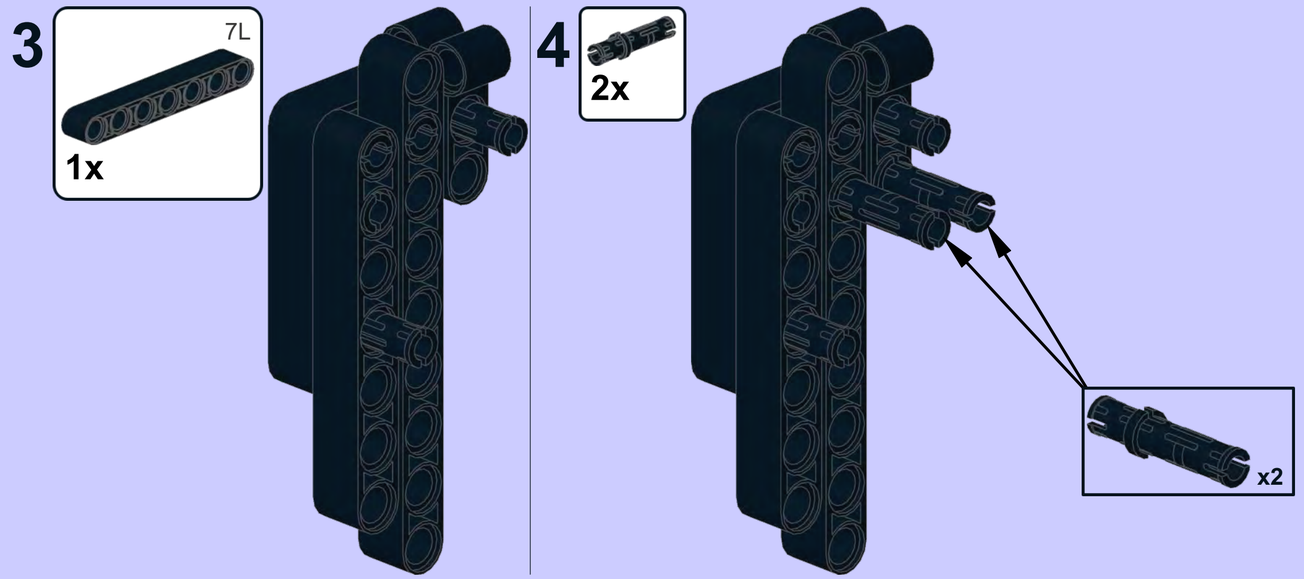
3
7L
1x
4
2x
x2

5

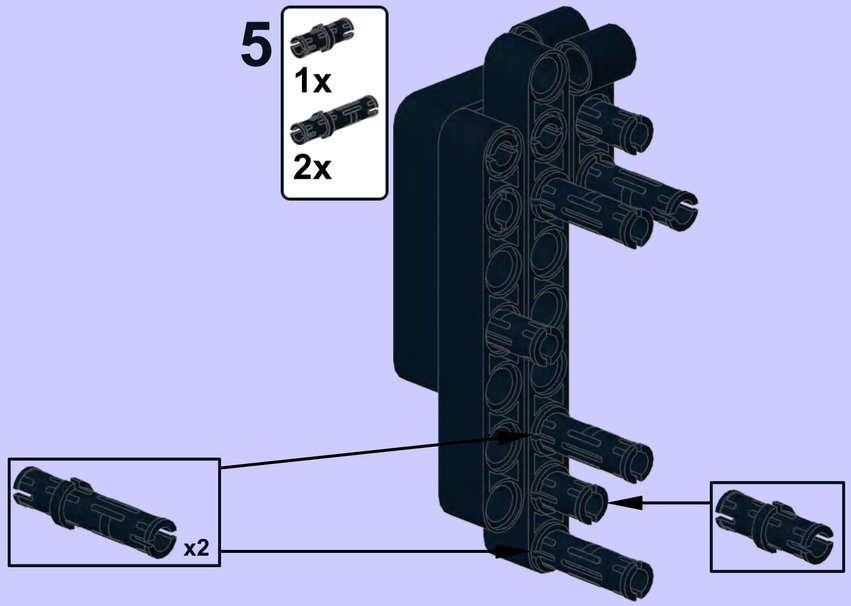


6

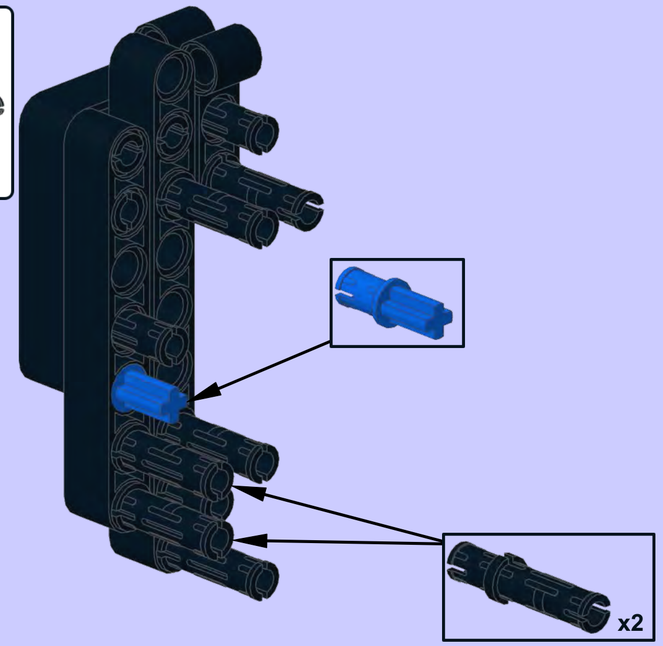

7

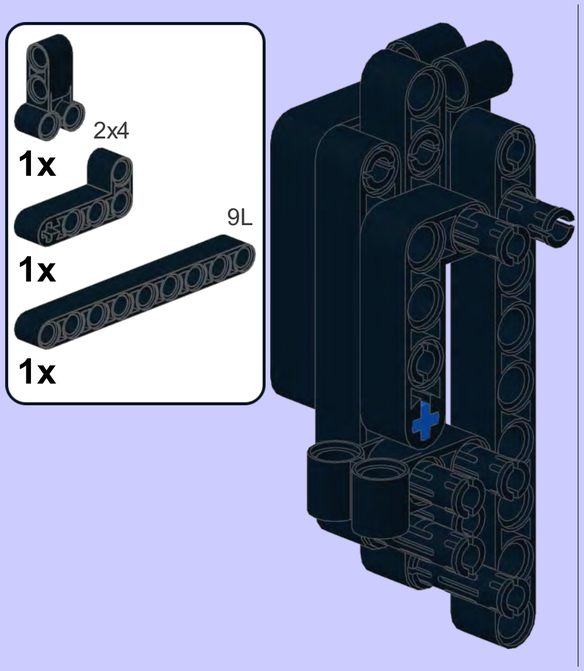


8

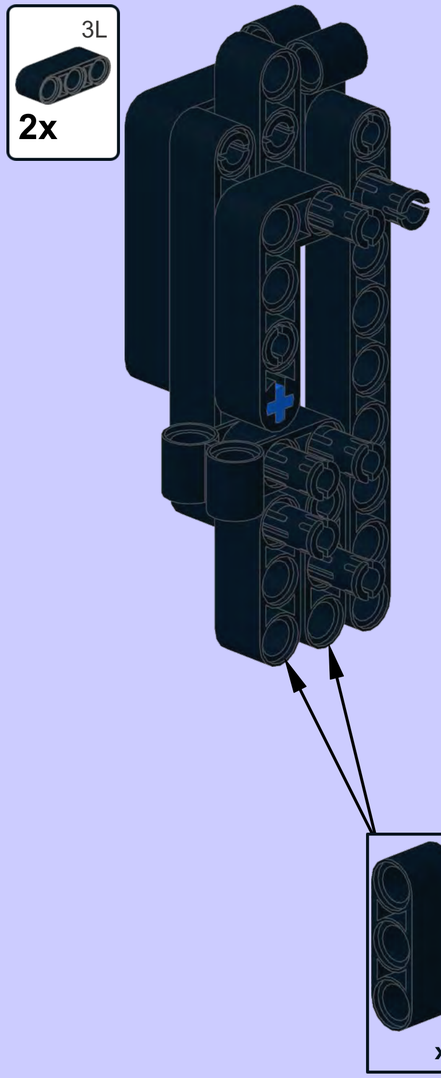

9

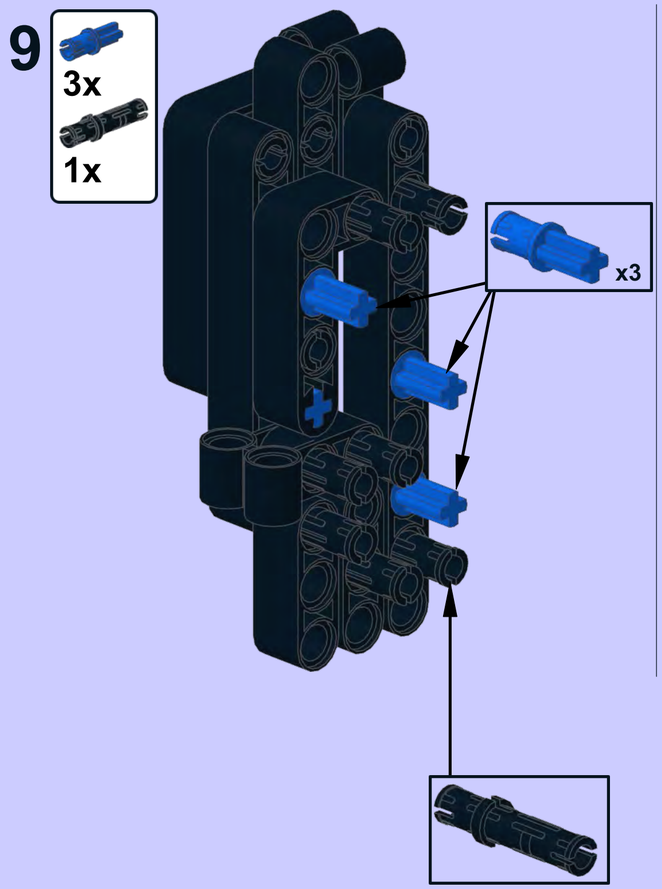


10

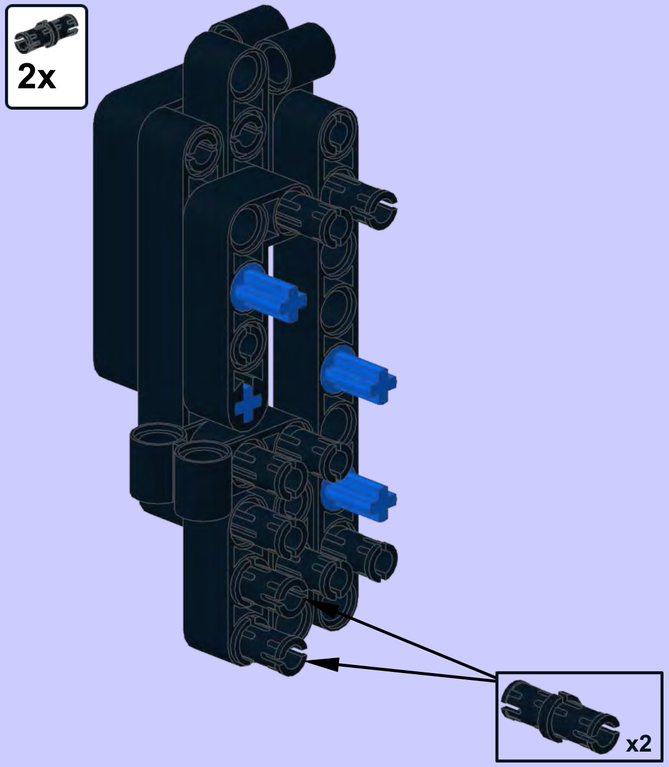

11

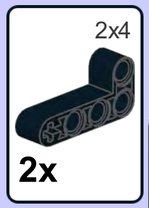

12

## 12

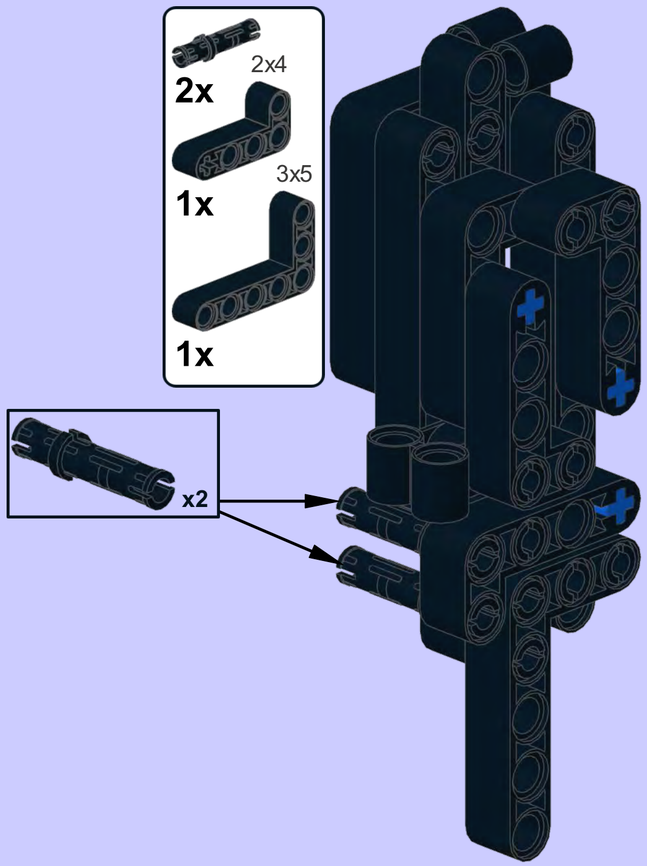


## 13

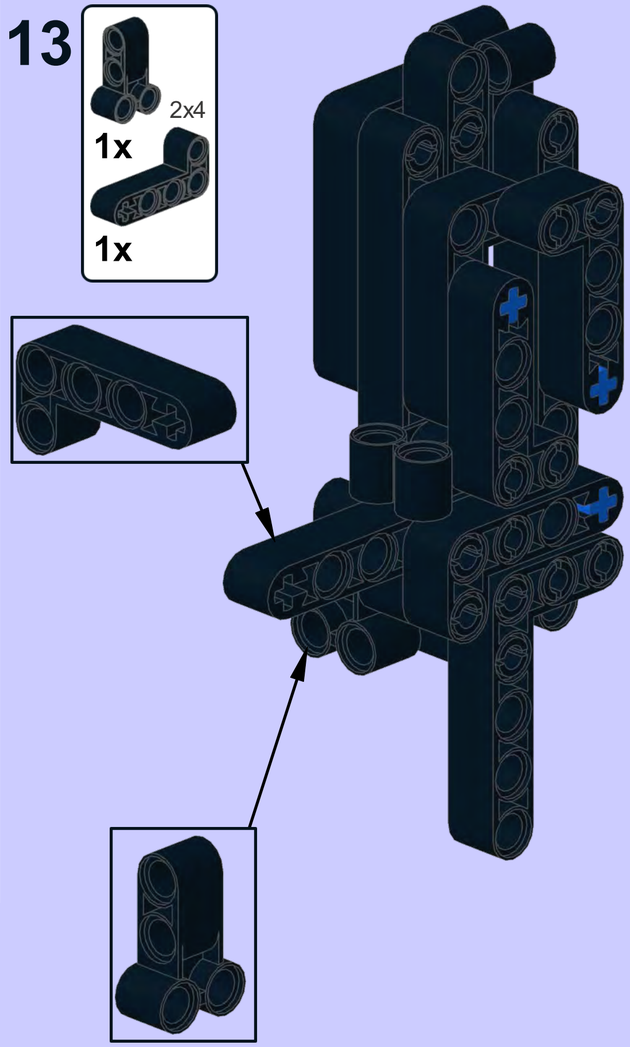


x20

# "Side" components - 20 required in total

**1**

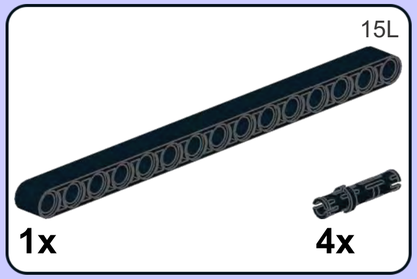


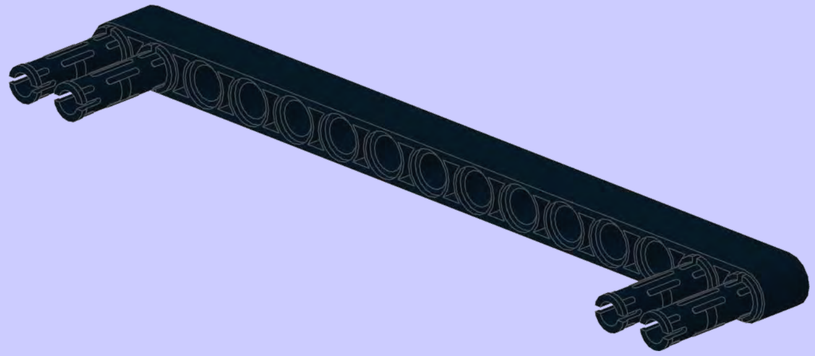

**2**

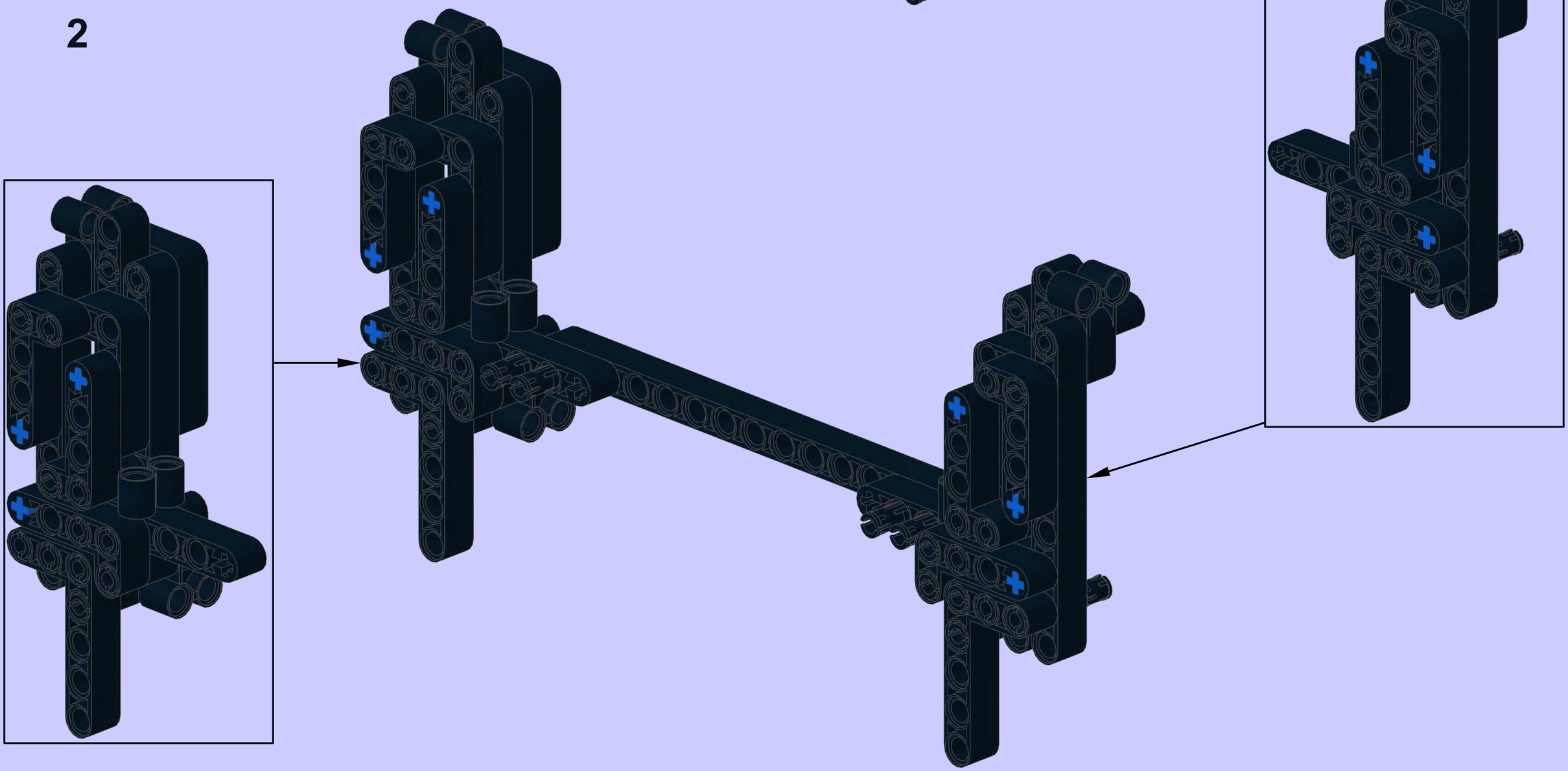

3

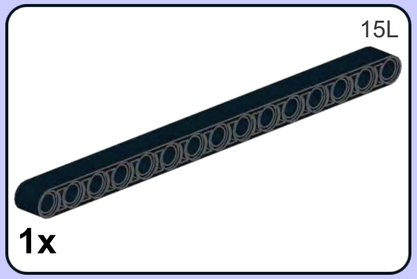


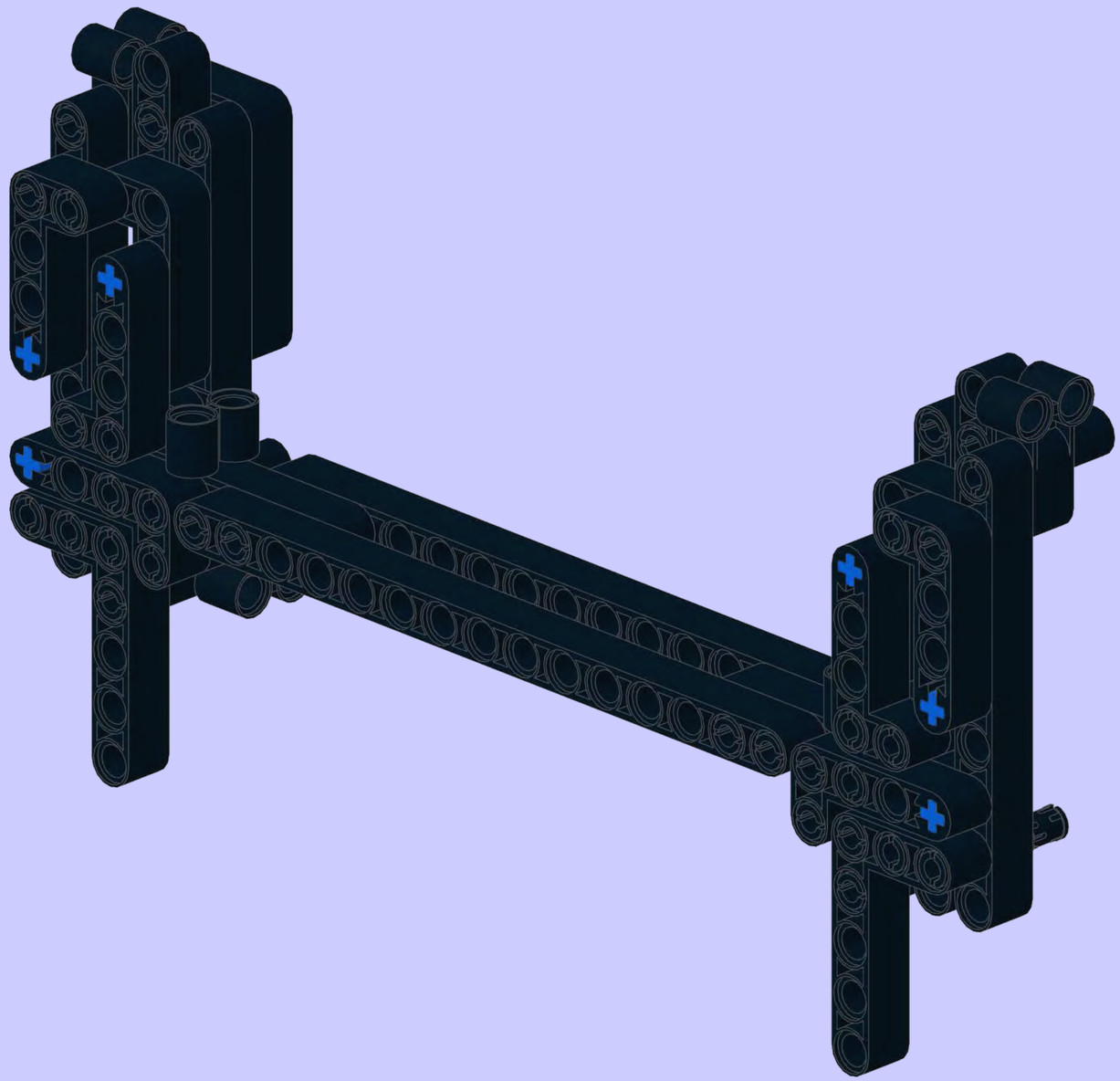

x20

## "Standard Cradle" components - 7 required

1

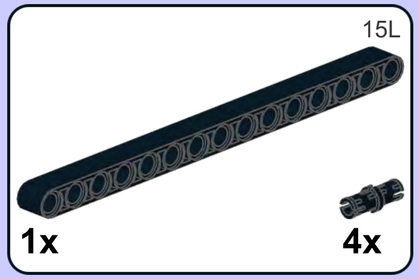


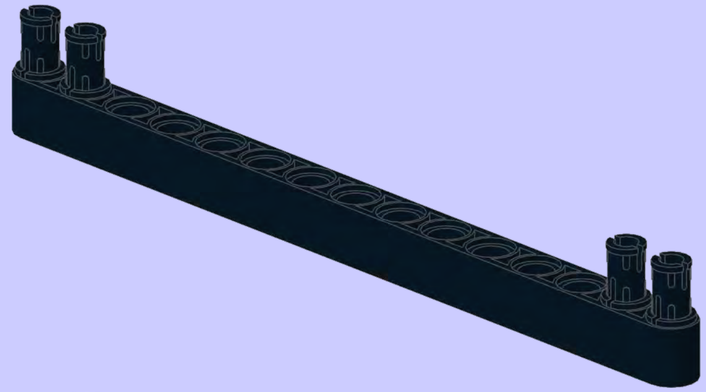

2

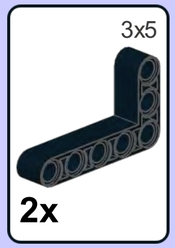


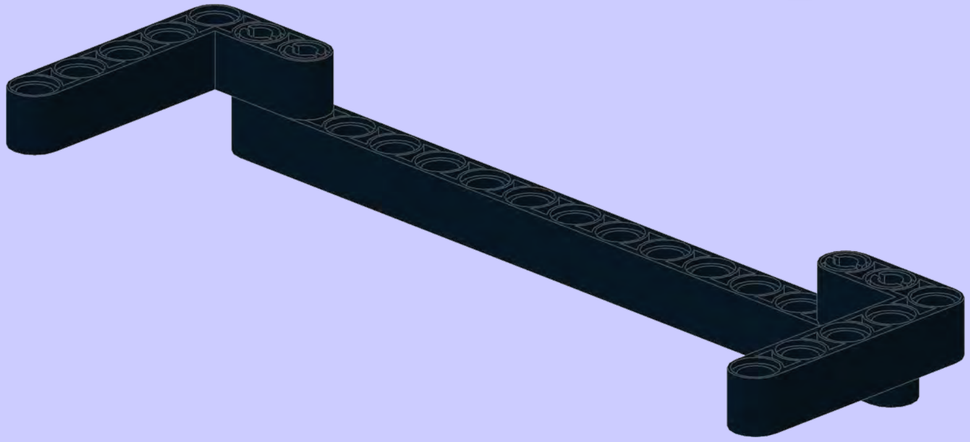

3

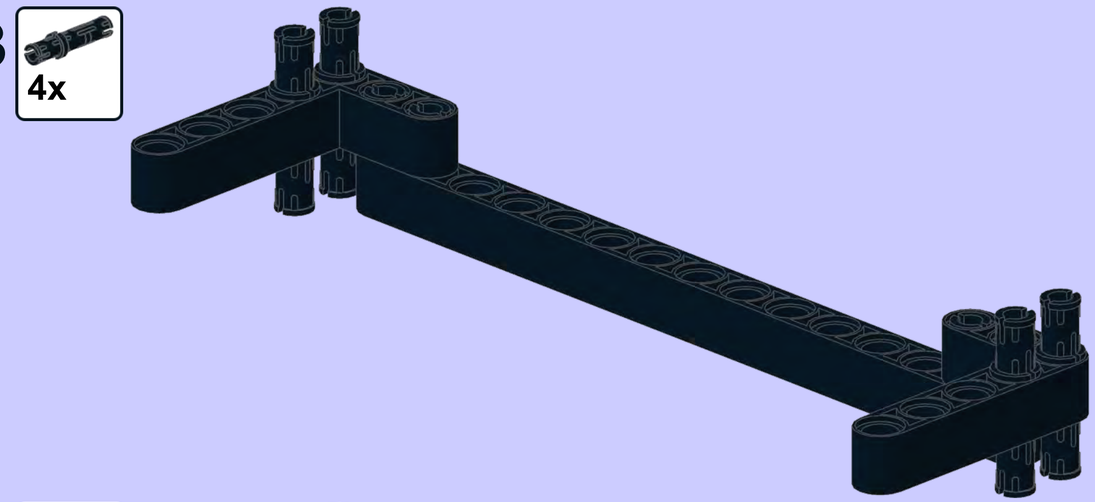


4

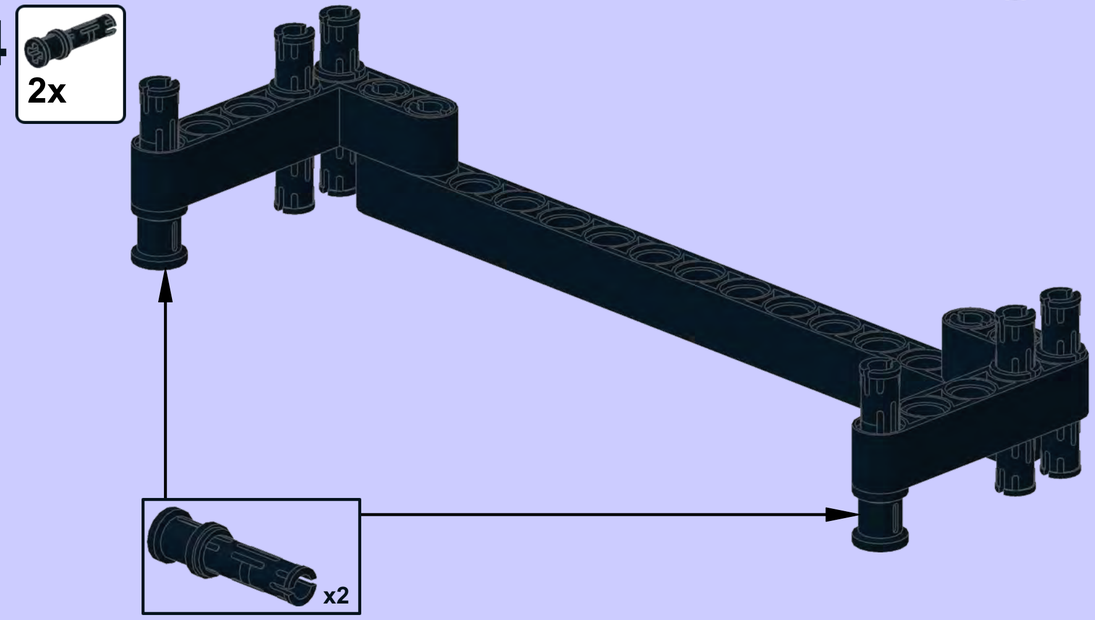

**5**

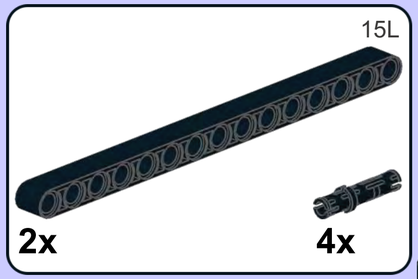


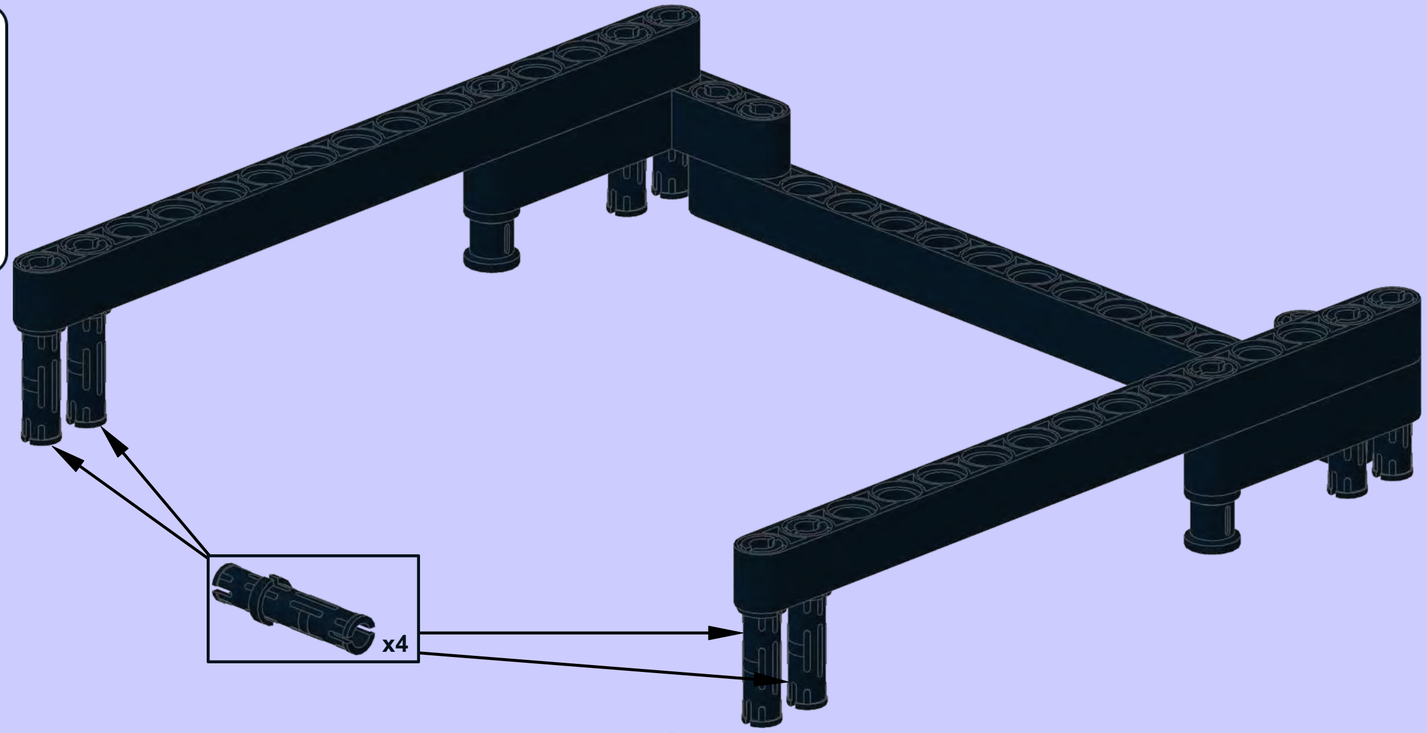


**6**

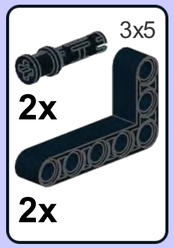


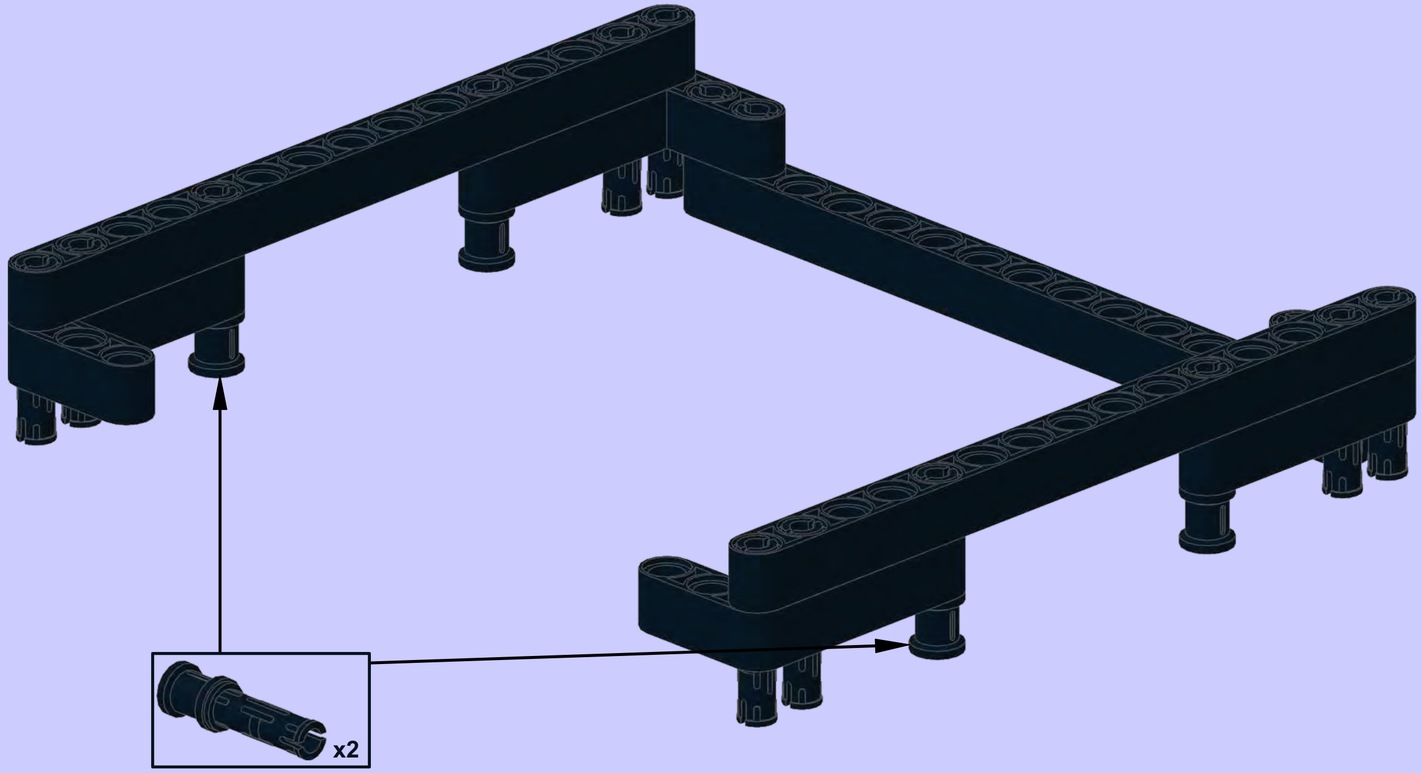

**7**

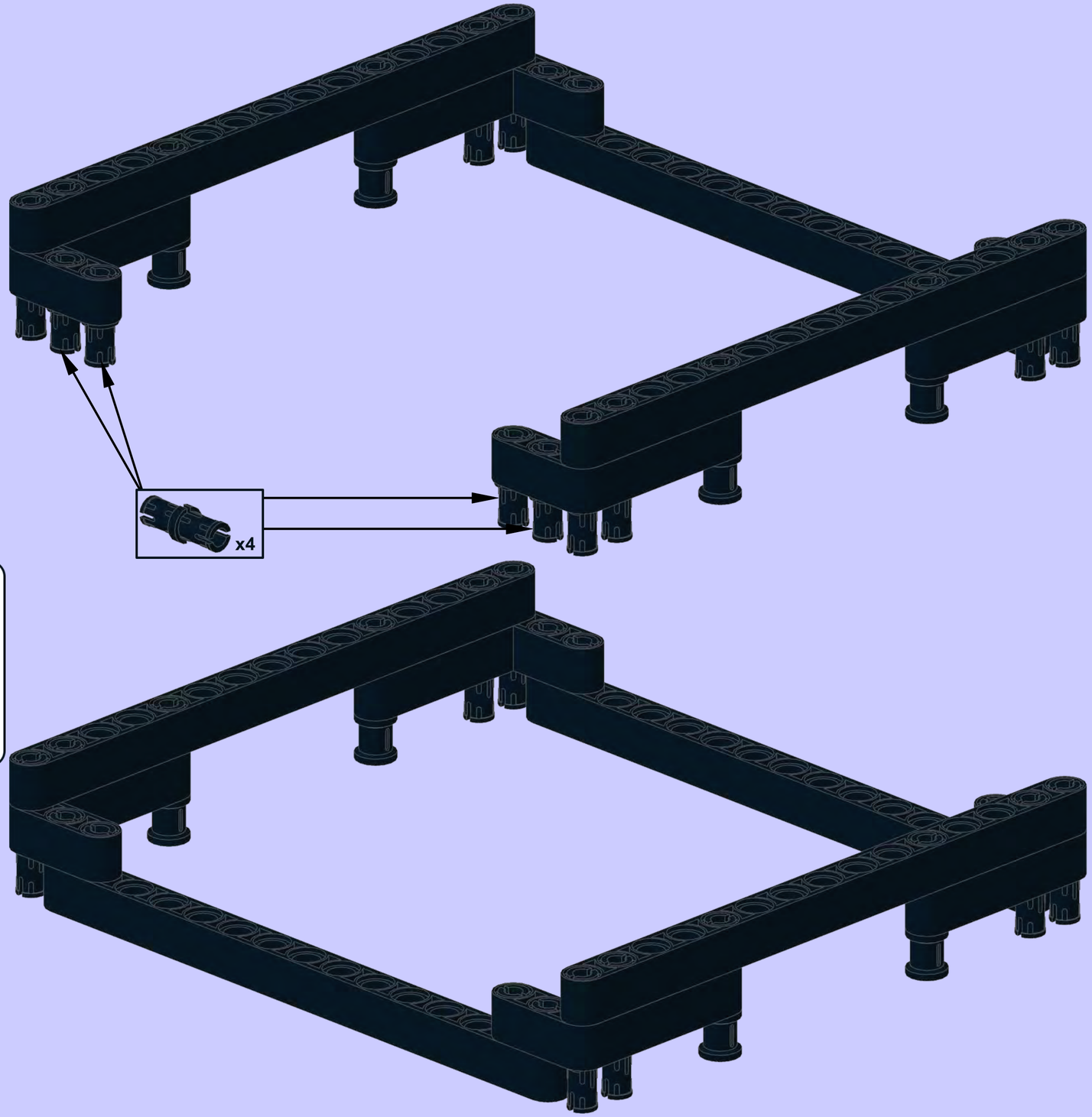


**8**

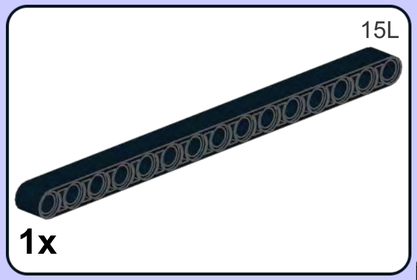


**x7**

## "Standard Base" component each comprised of 2 "sides" and 1 "standard cradle" - 7 required

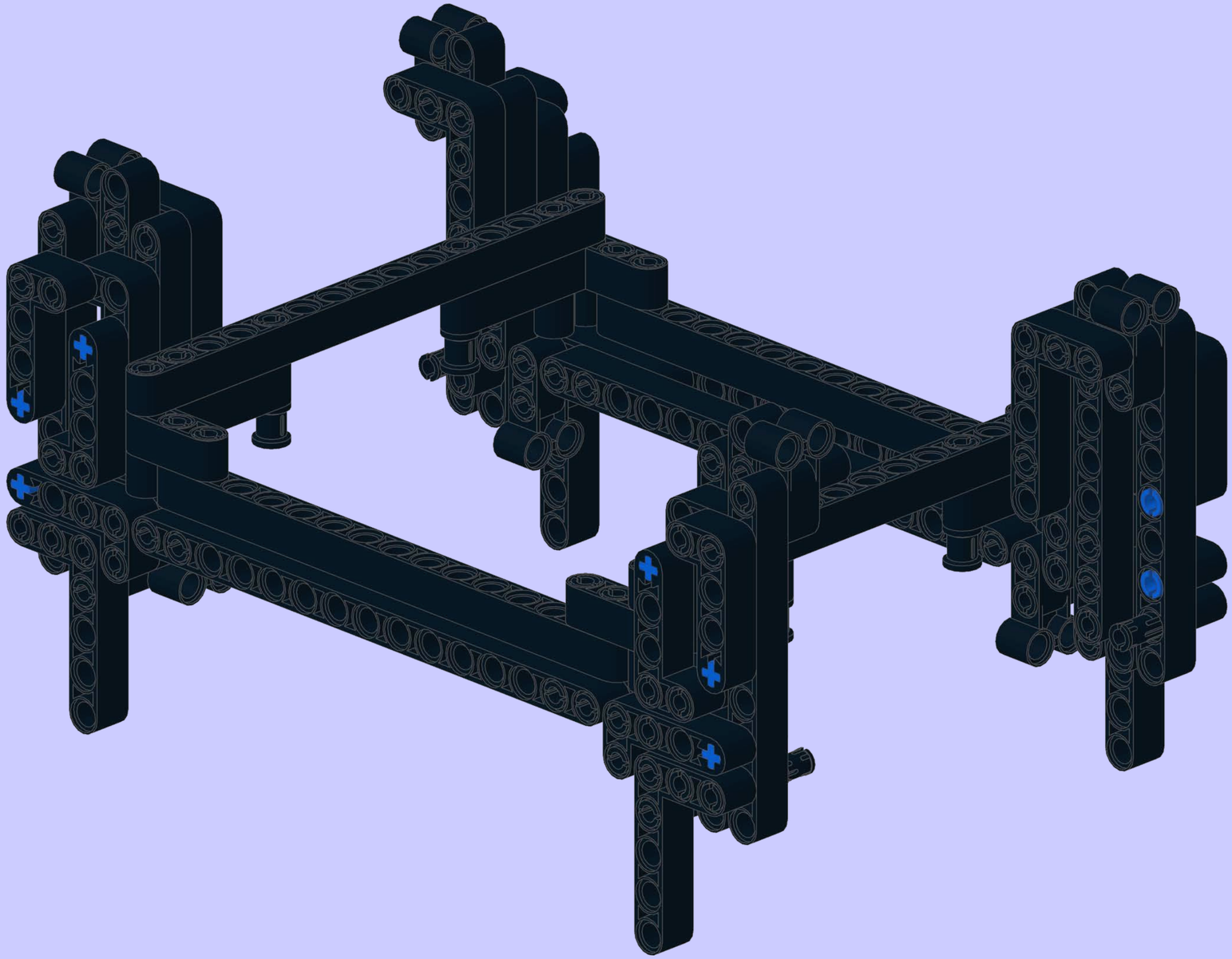

x7

**Single cross support used as a basic building component - 26 required in total**

1

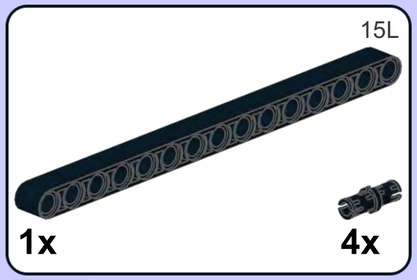


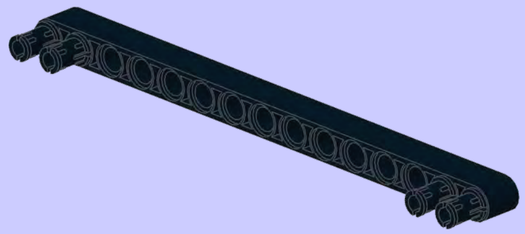

2

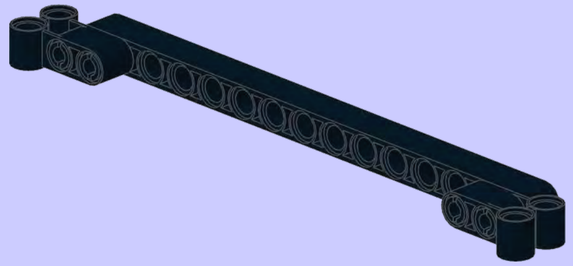

**x26**

# Left Bottom Back (LBB) Calculator
# Multiplies input by -4, divides by 19

**1**

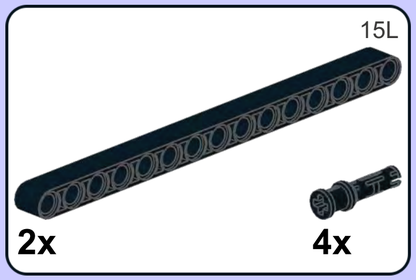

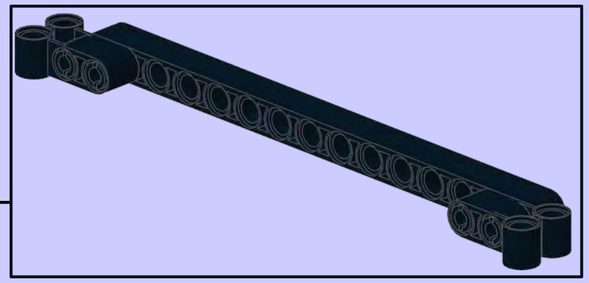

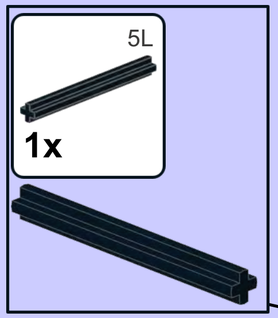


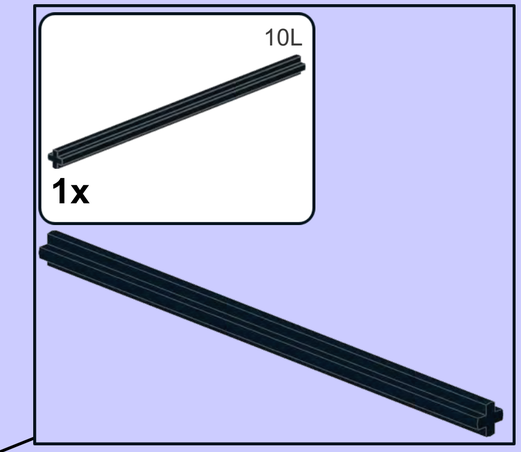


**2**

**3**

8T

**1x**

4L

**1x**

**4**

**1x**

40T

**1x**

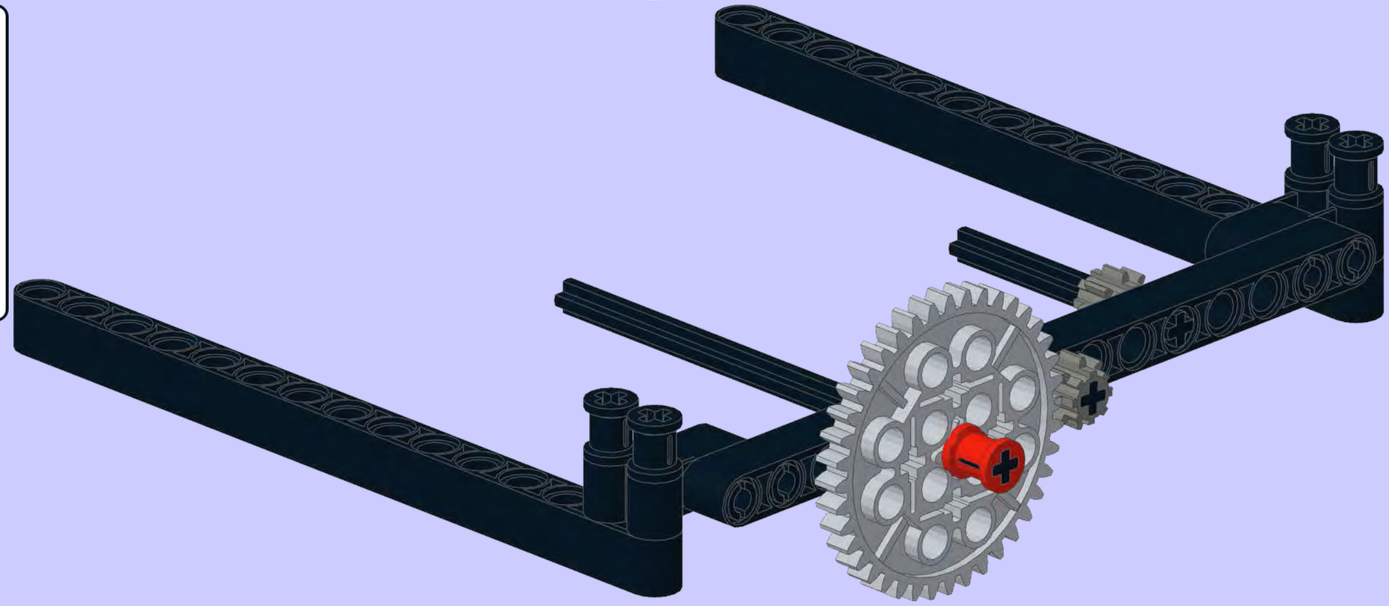

5

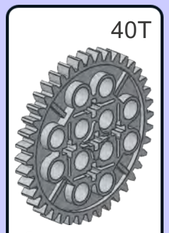


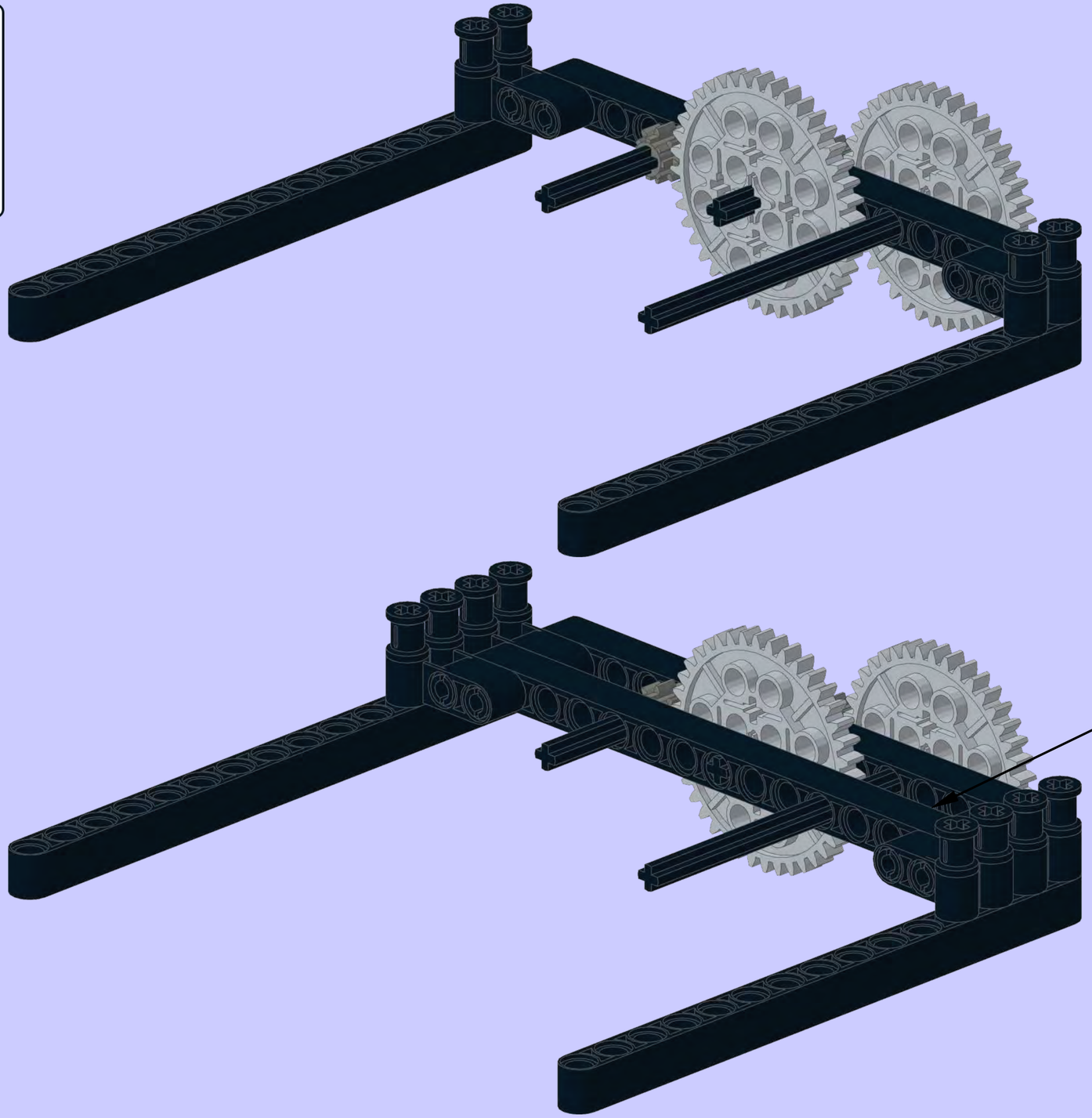

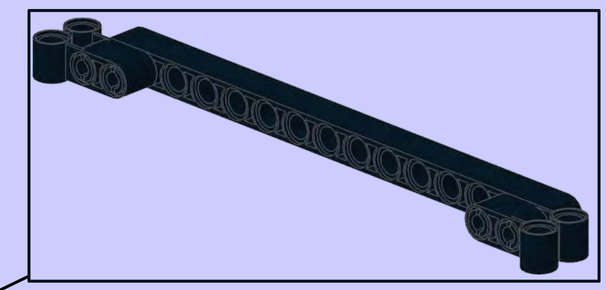

6

**7**

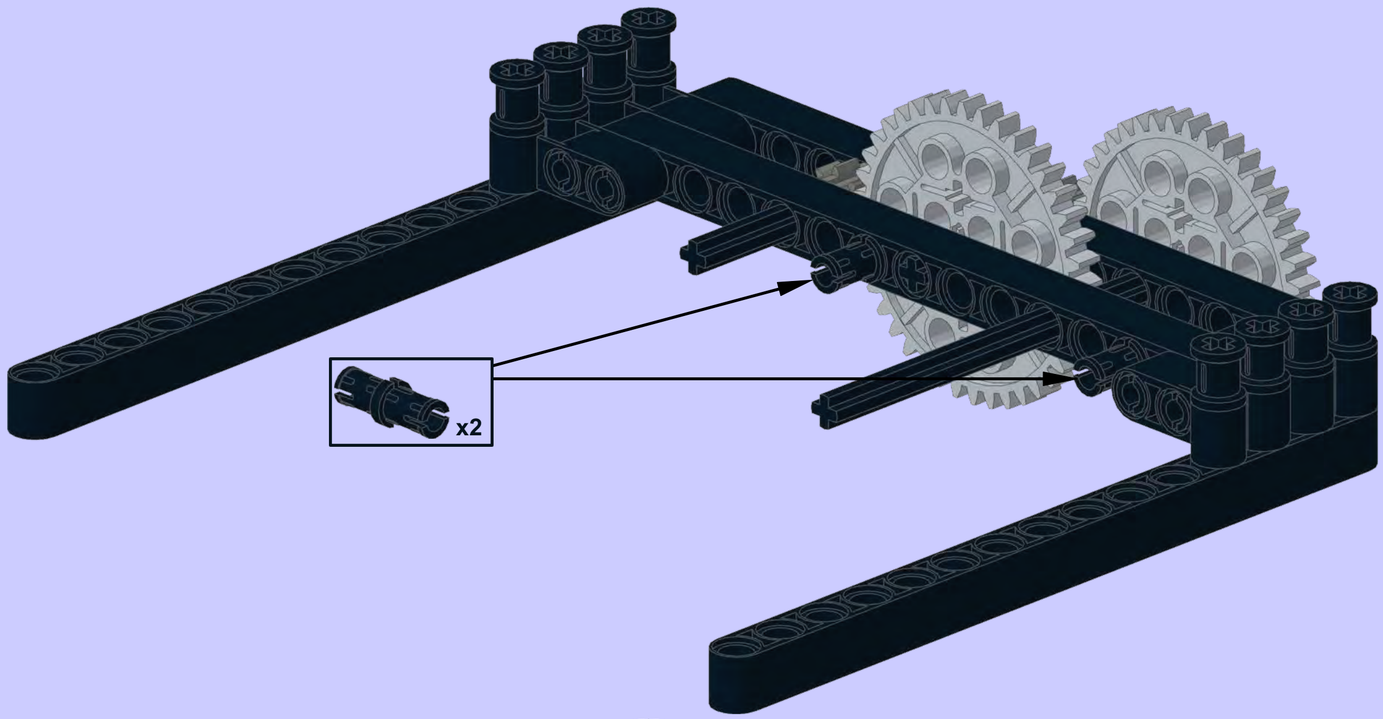


**8**

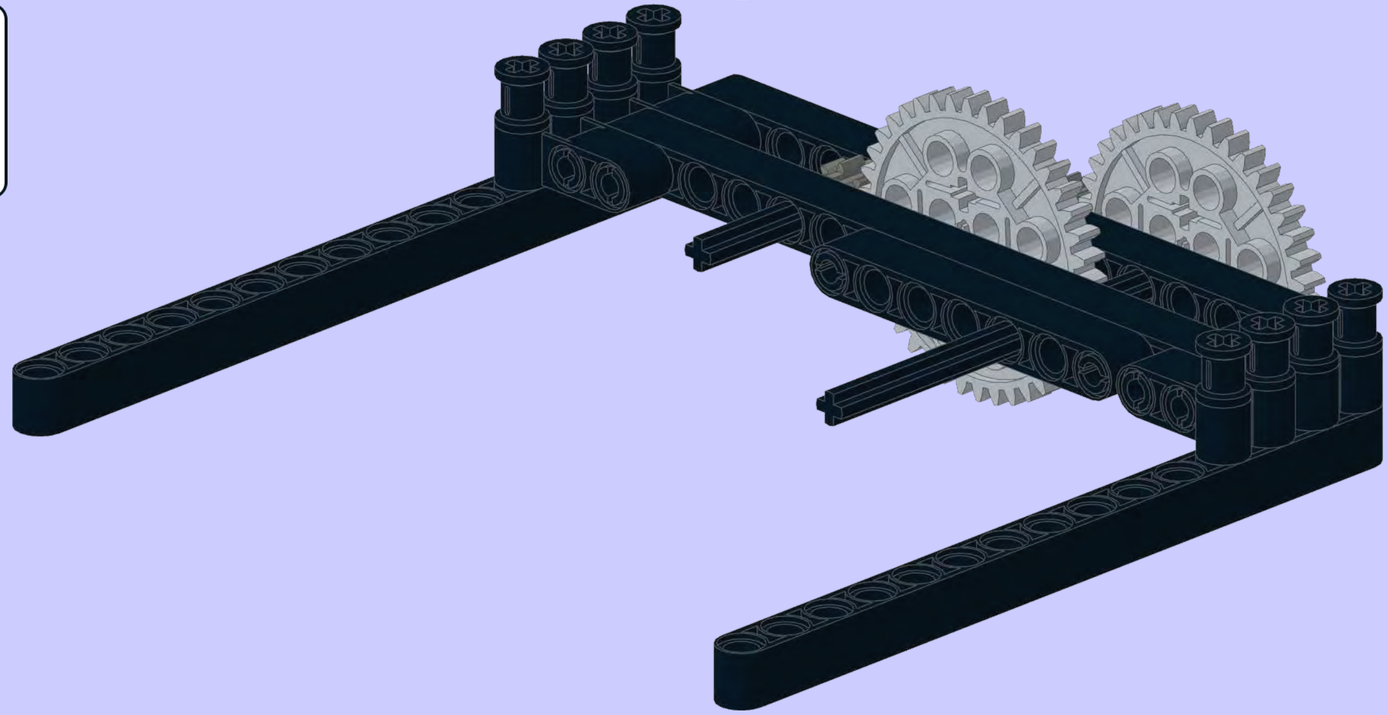

**9**

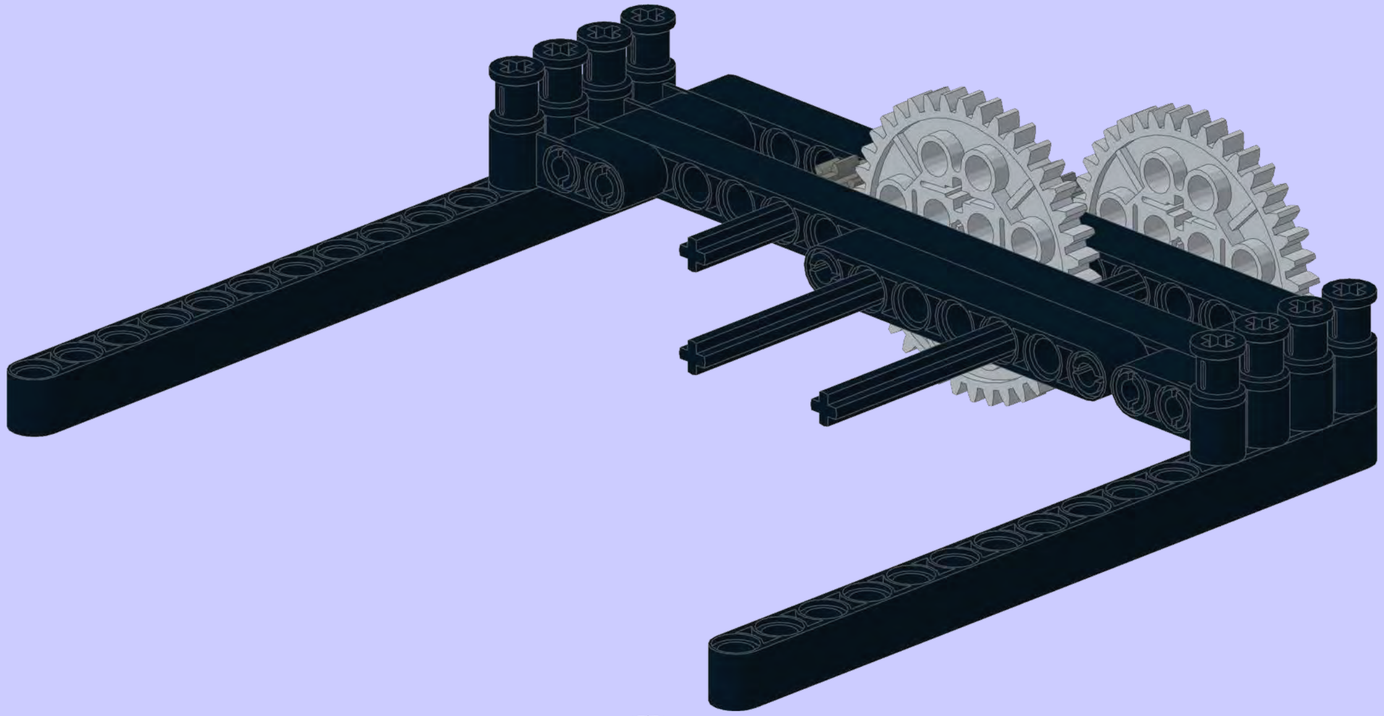

**10**

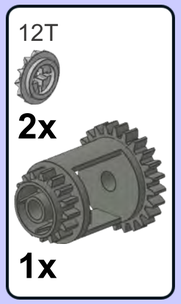


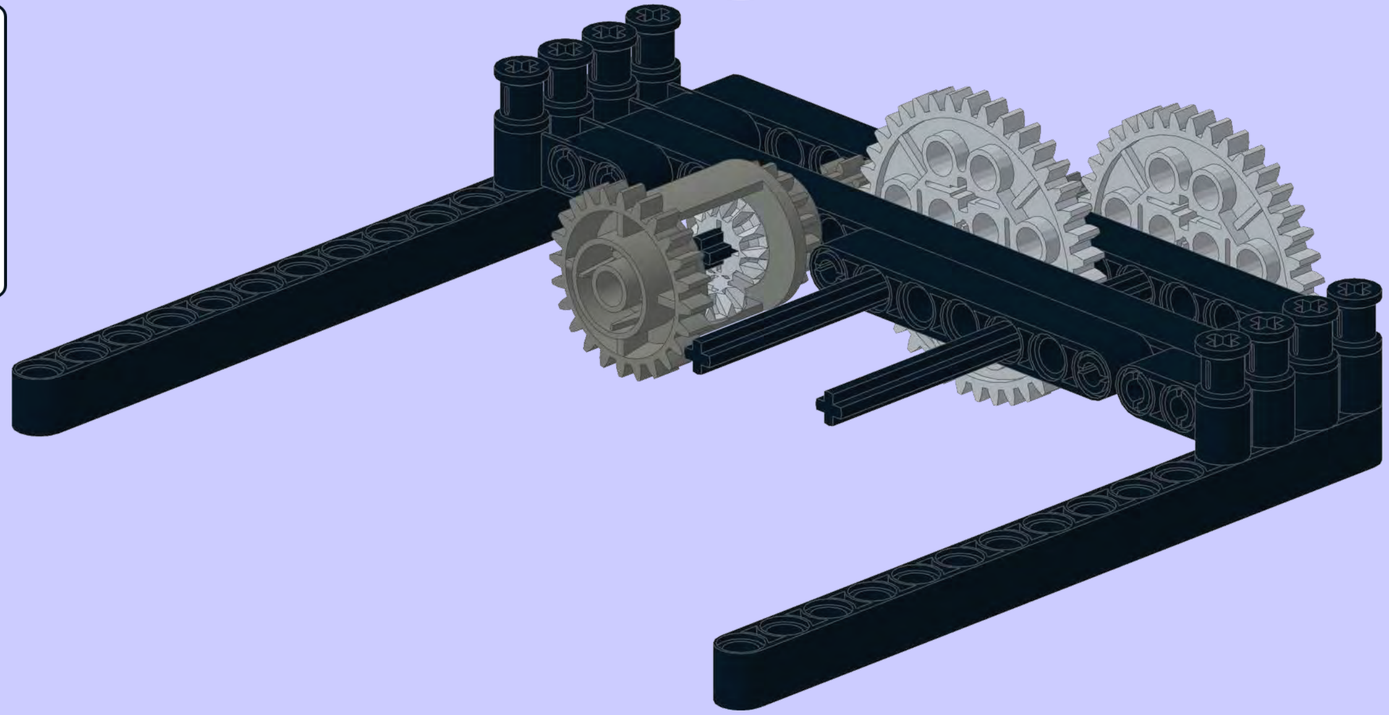

**11**

12T

**1x**

36T

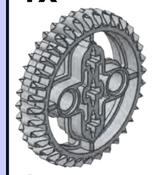

**1x**

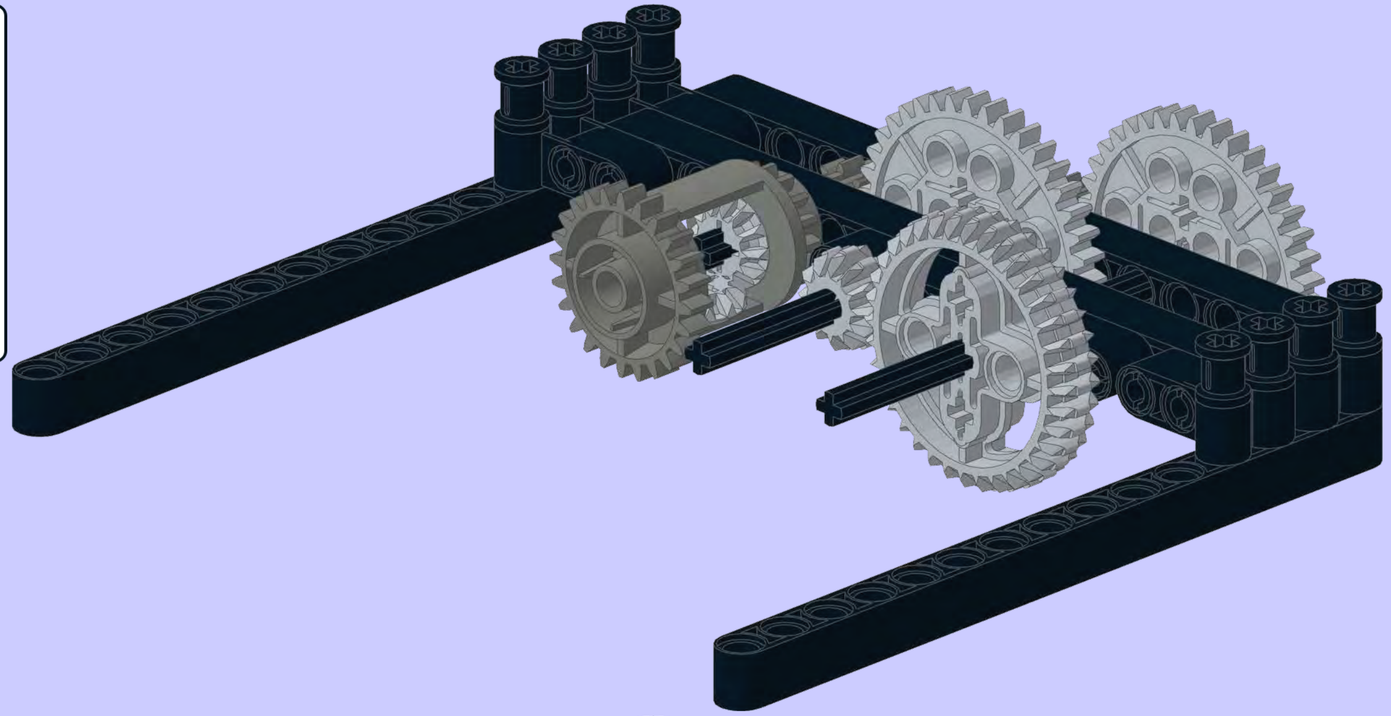

**12**

24T

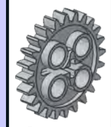

**1x**

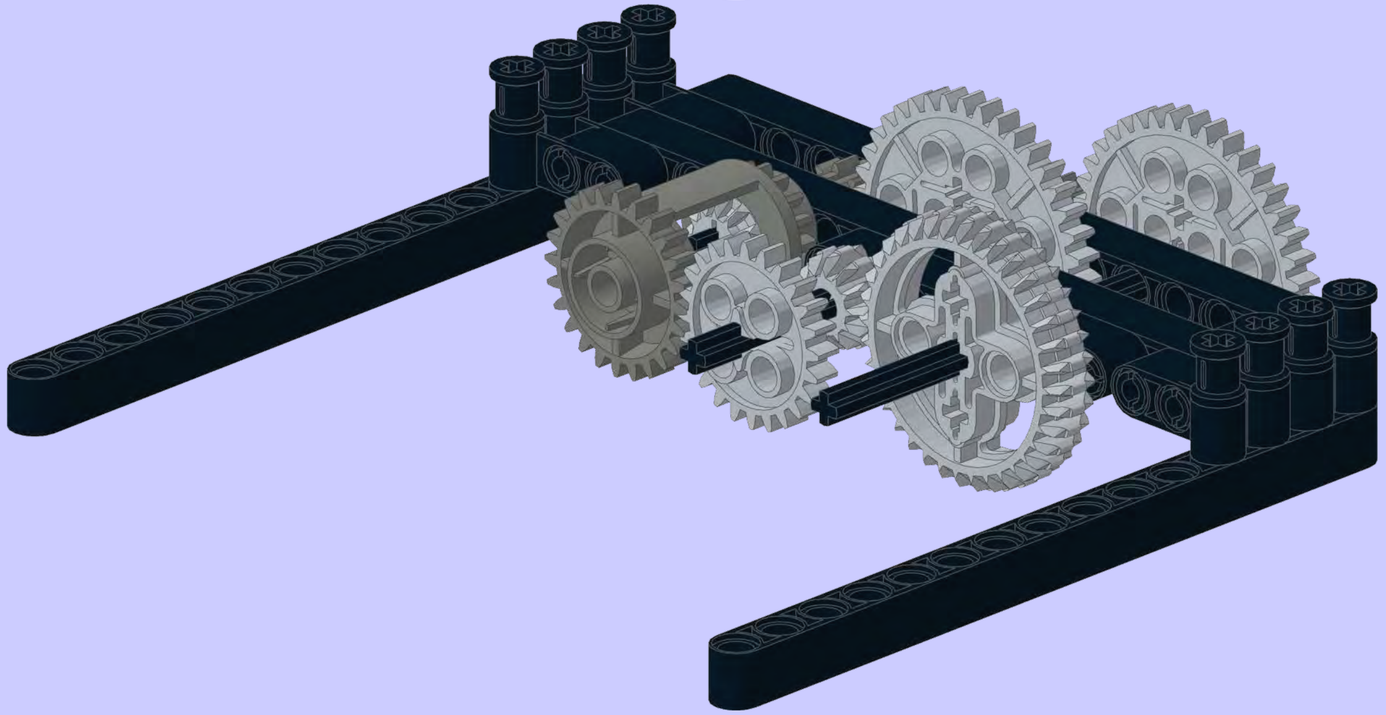

**13**

**4x**

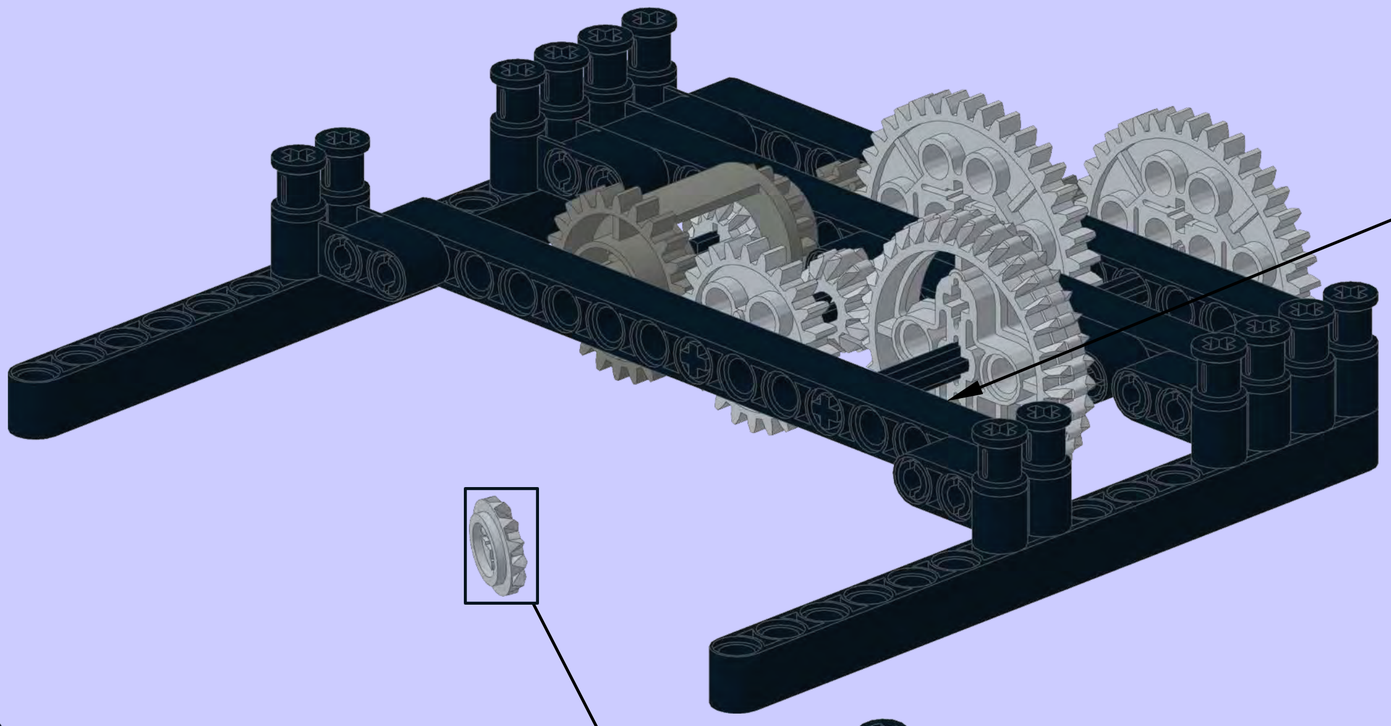

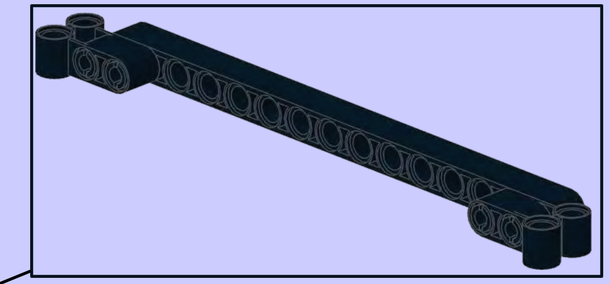



**14**

12T

**1x**

20T

6L

**1x**

**1x**

# Riser frame for doubling or halving - 3 required

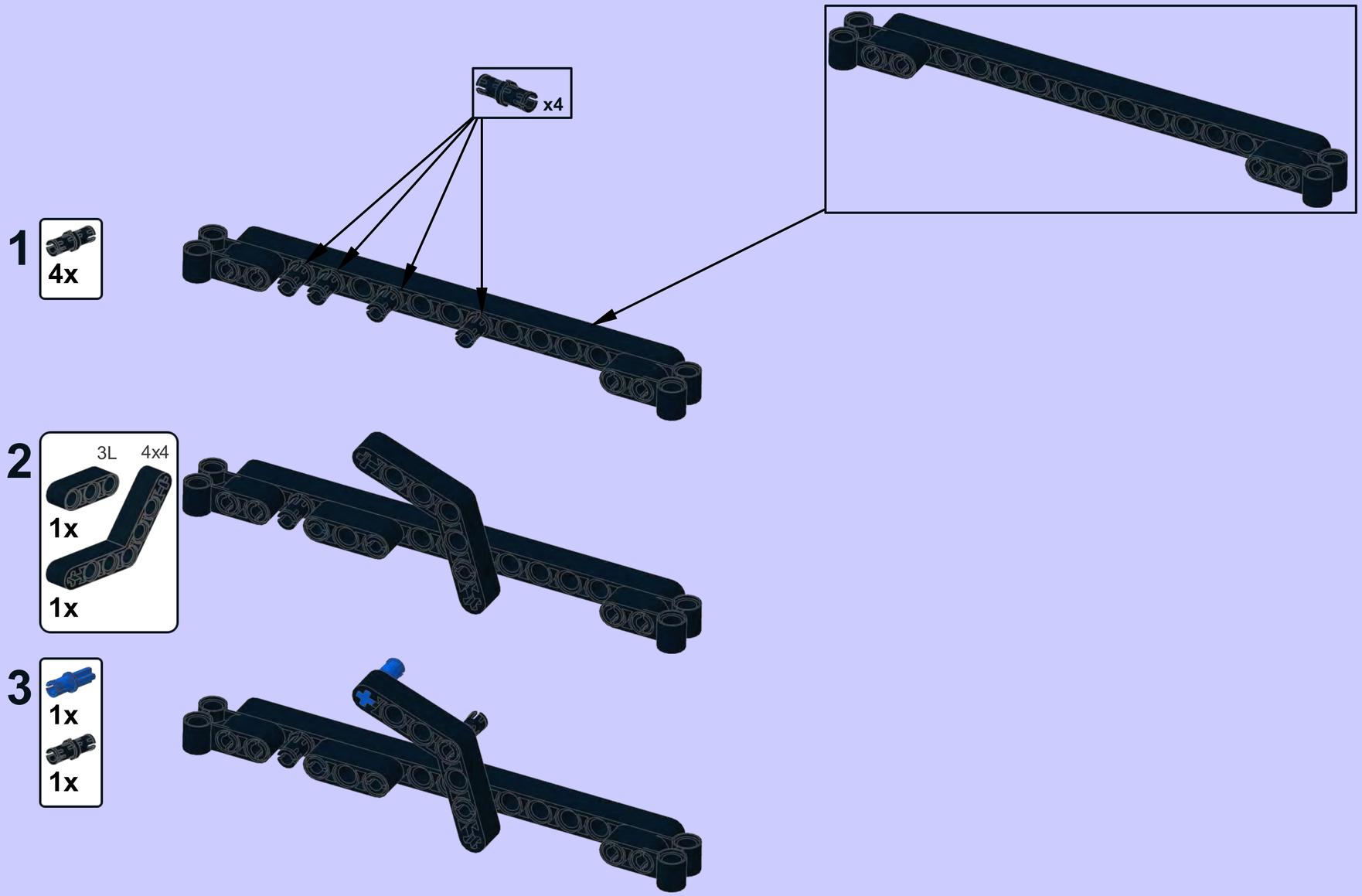

**4**

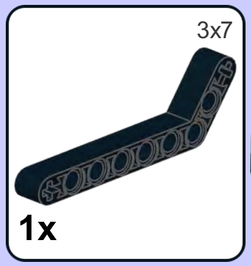


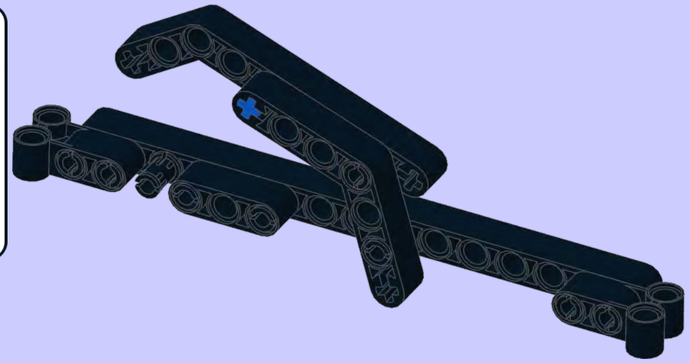

**5**

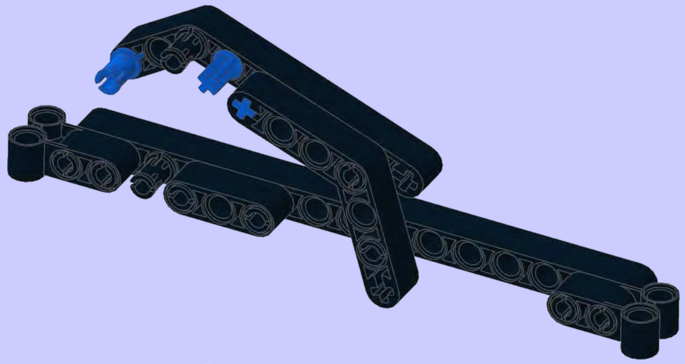

**6**

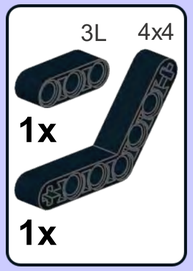


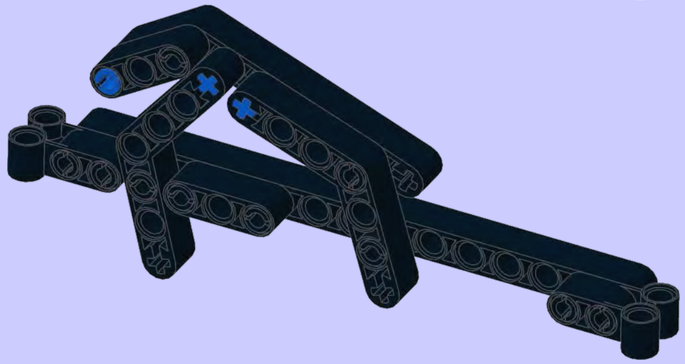

**x3**

15

4x

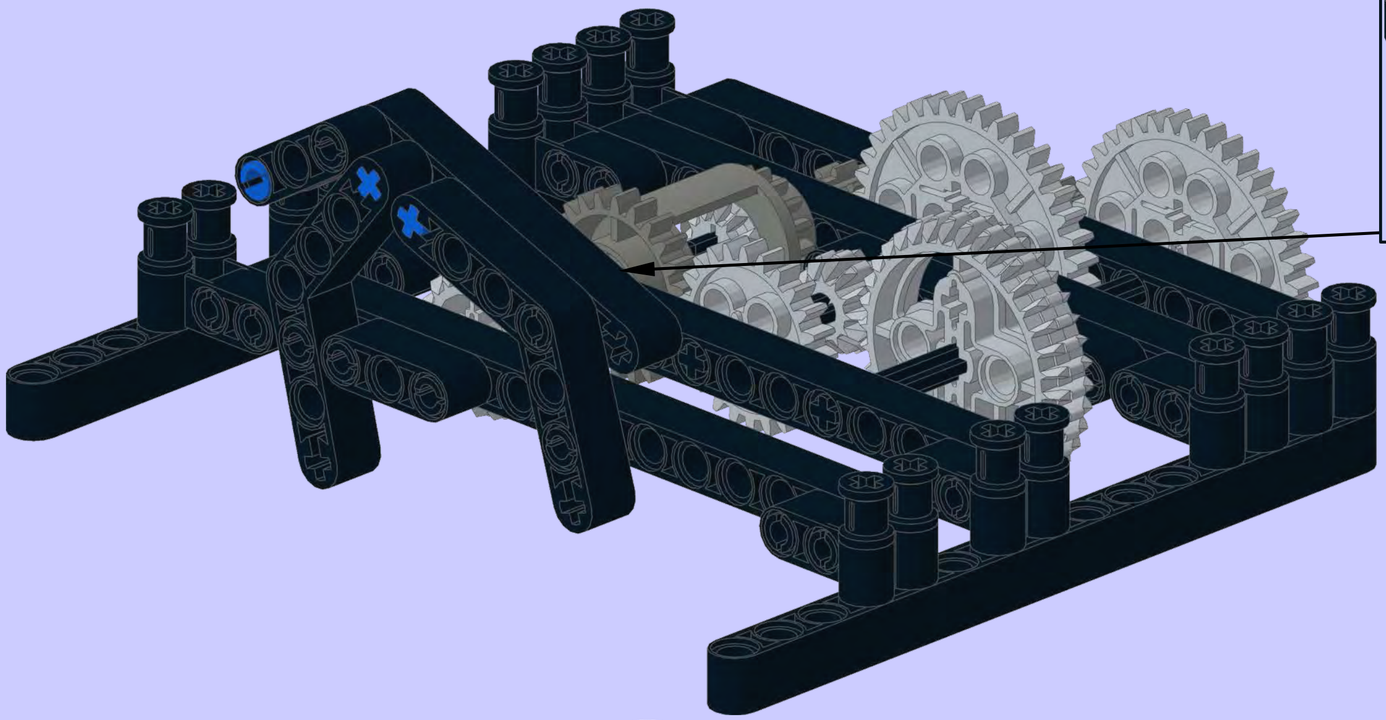

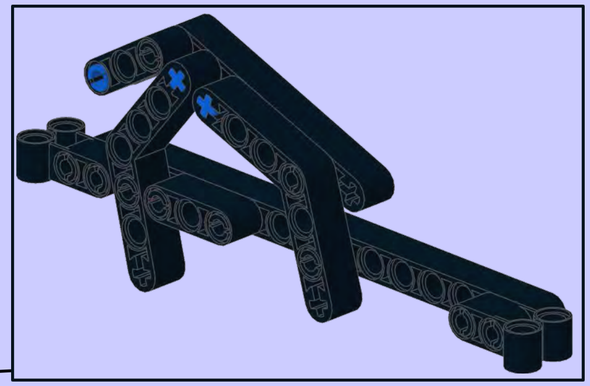

16

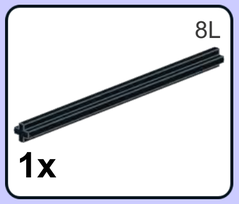


1x

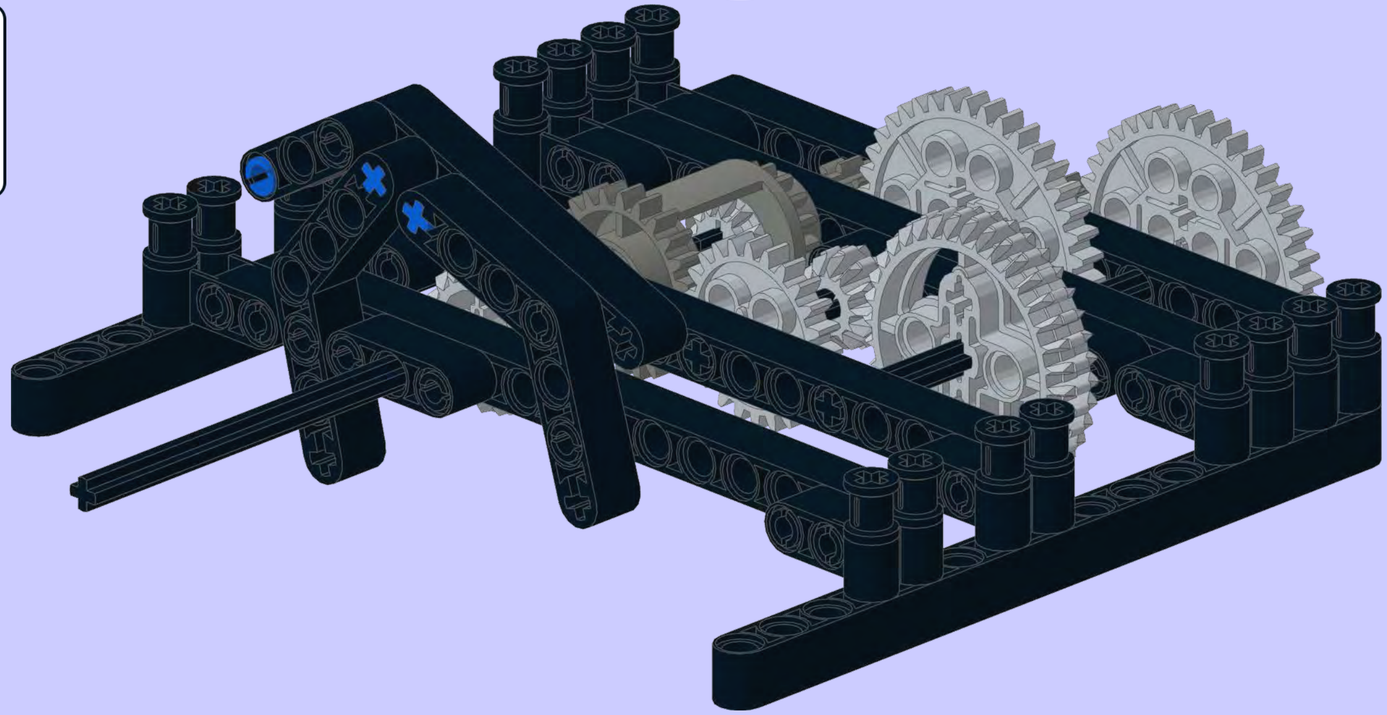

**17**

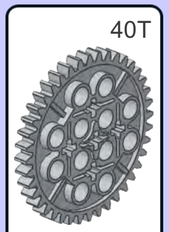


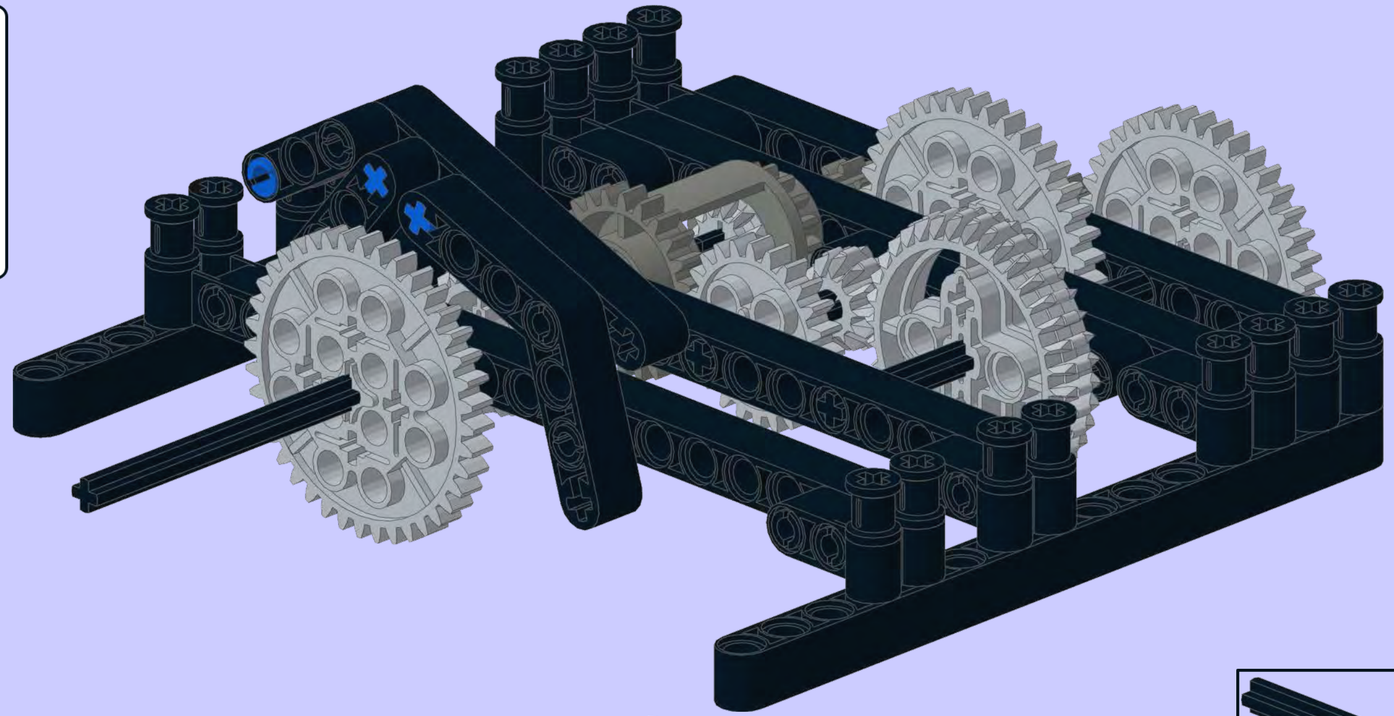

**18**




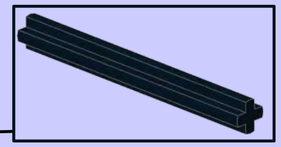

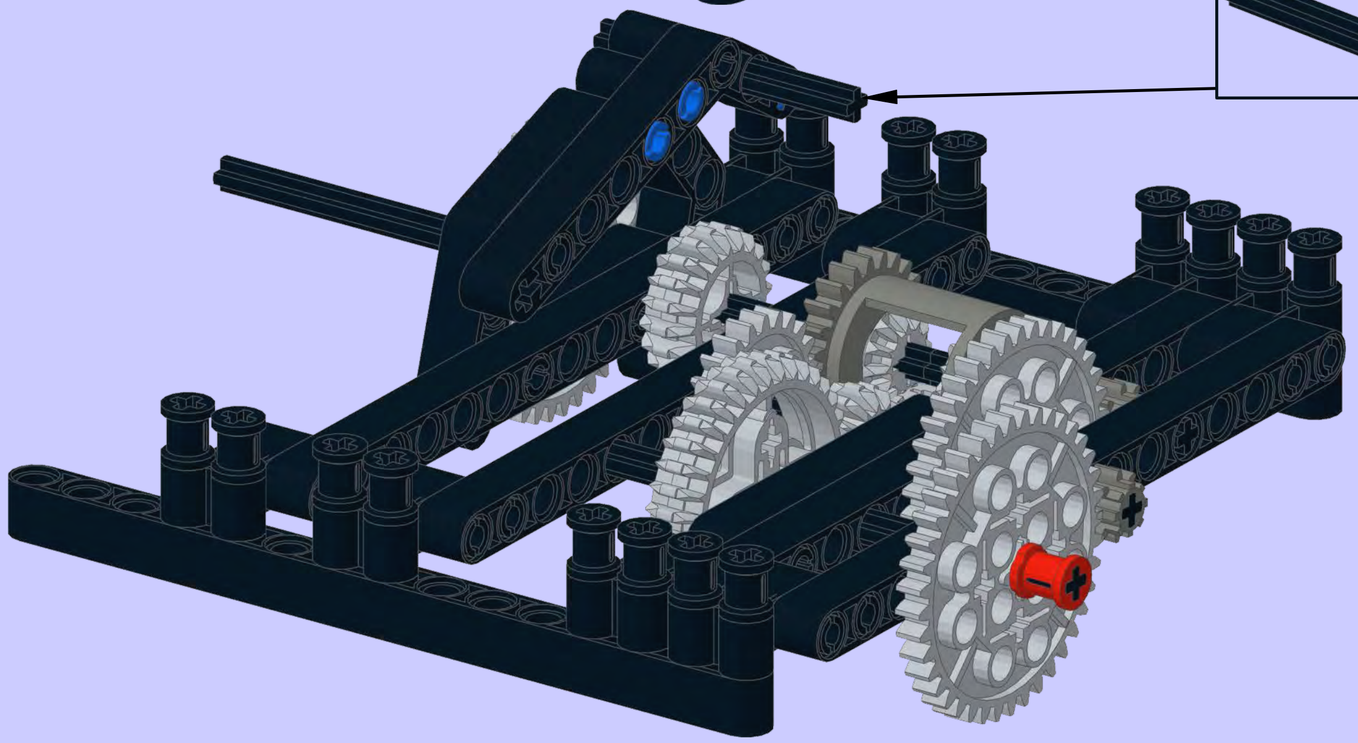

19

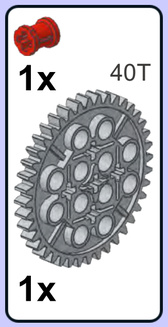


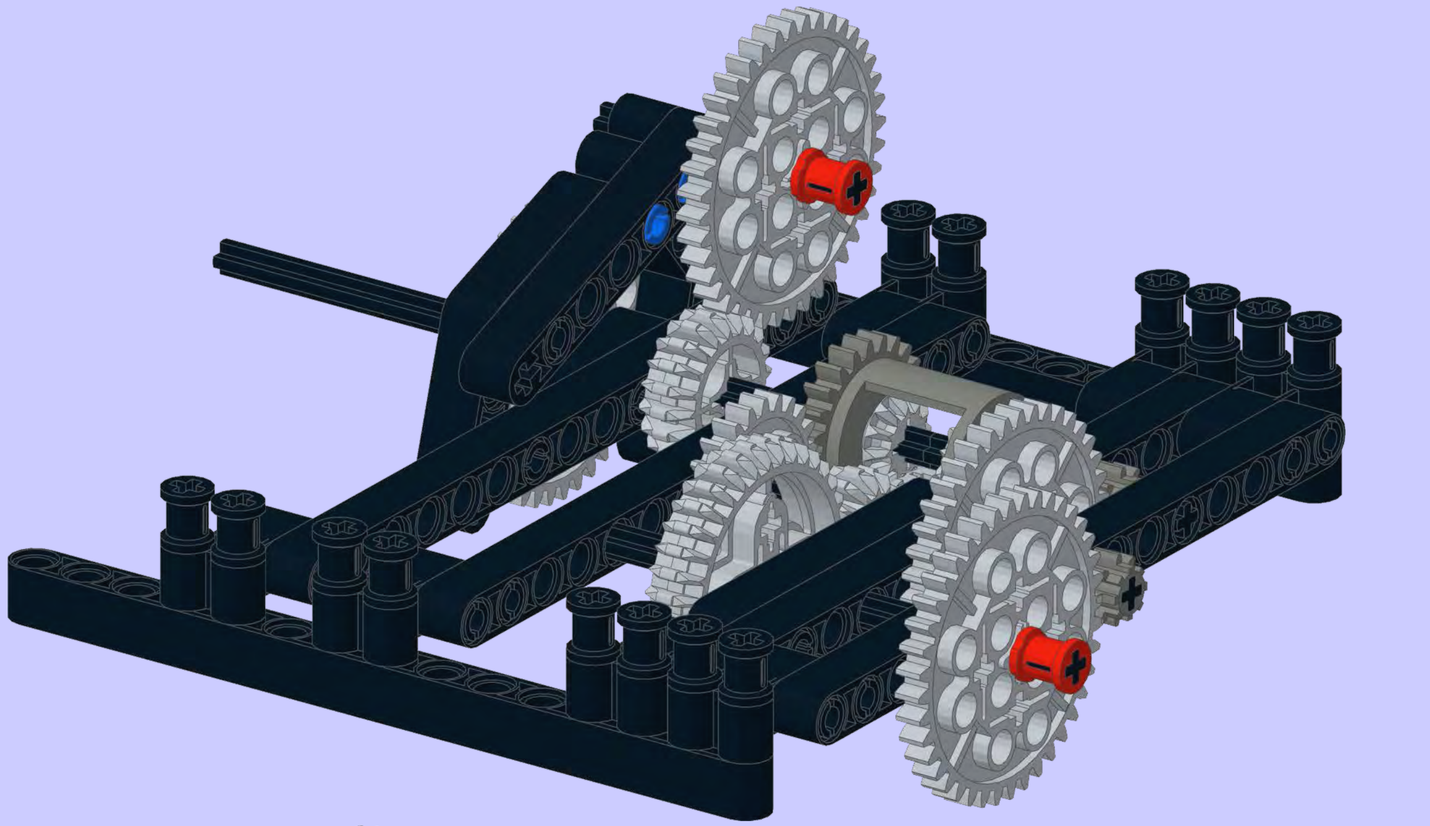

20

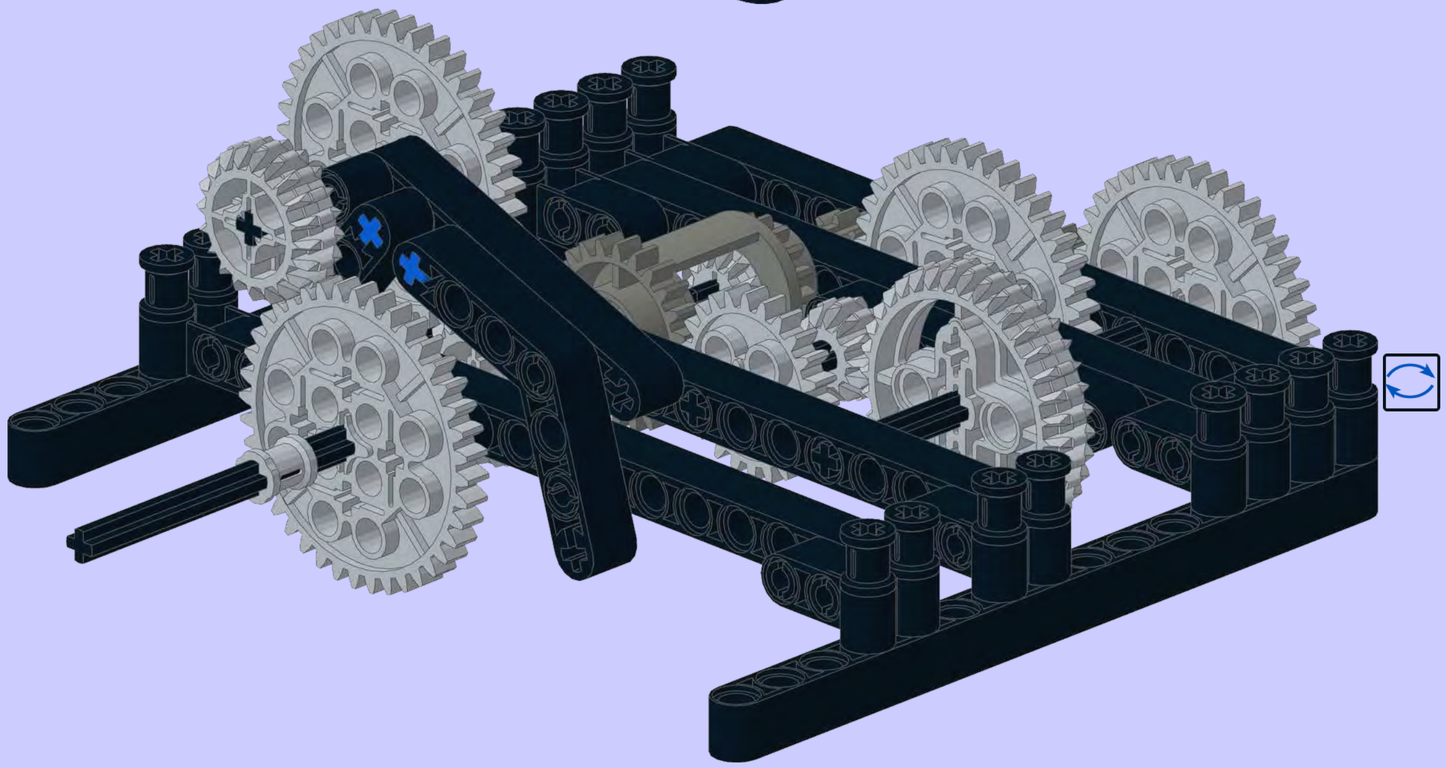

**21**

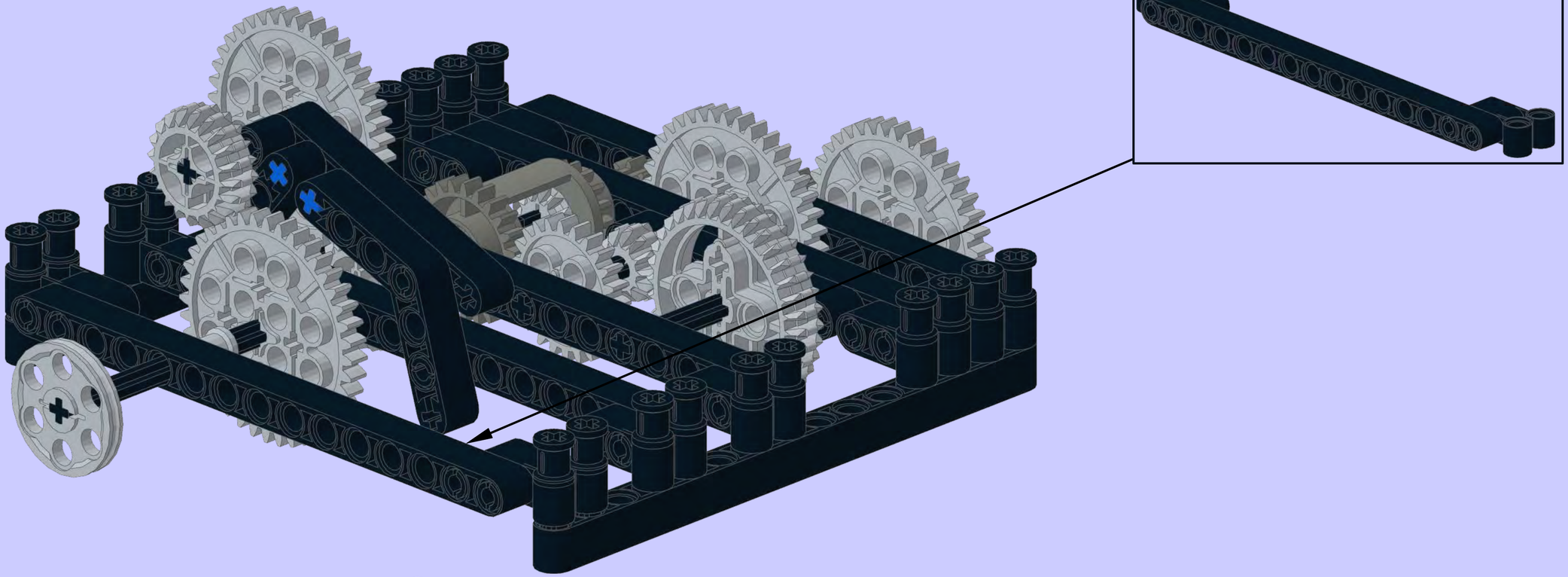

**22**

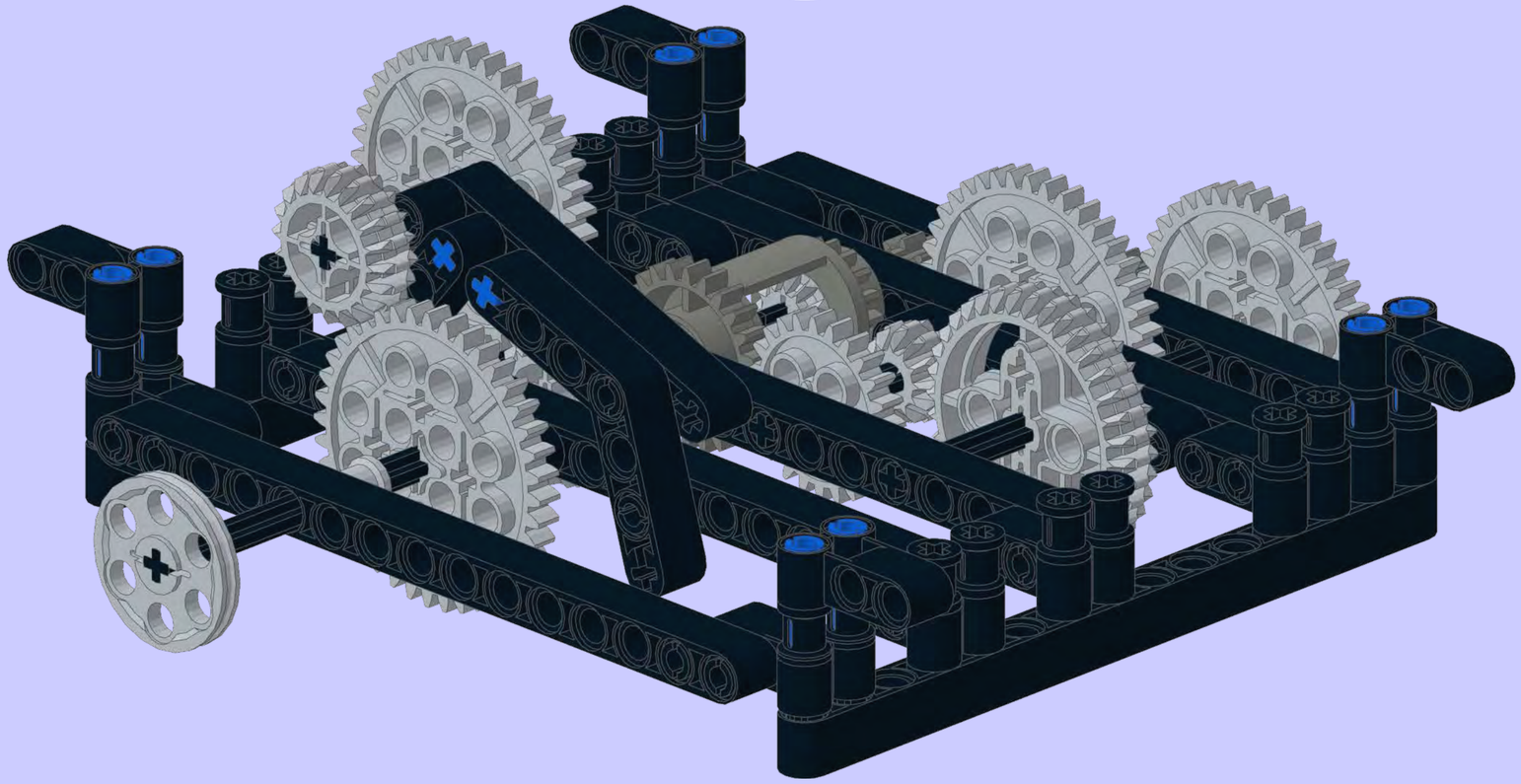

1

# Left Bottom Back (LBB) rack - using standard base

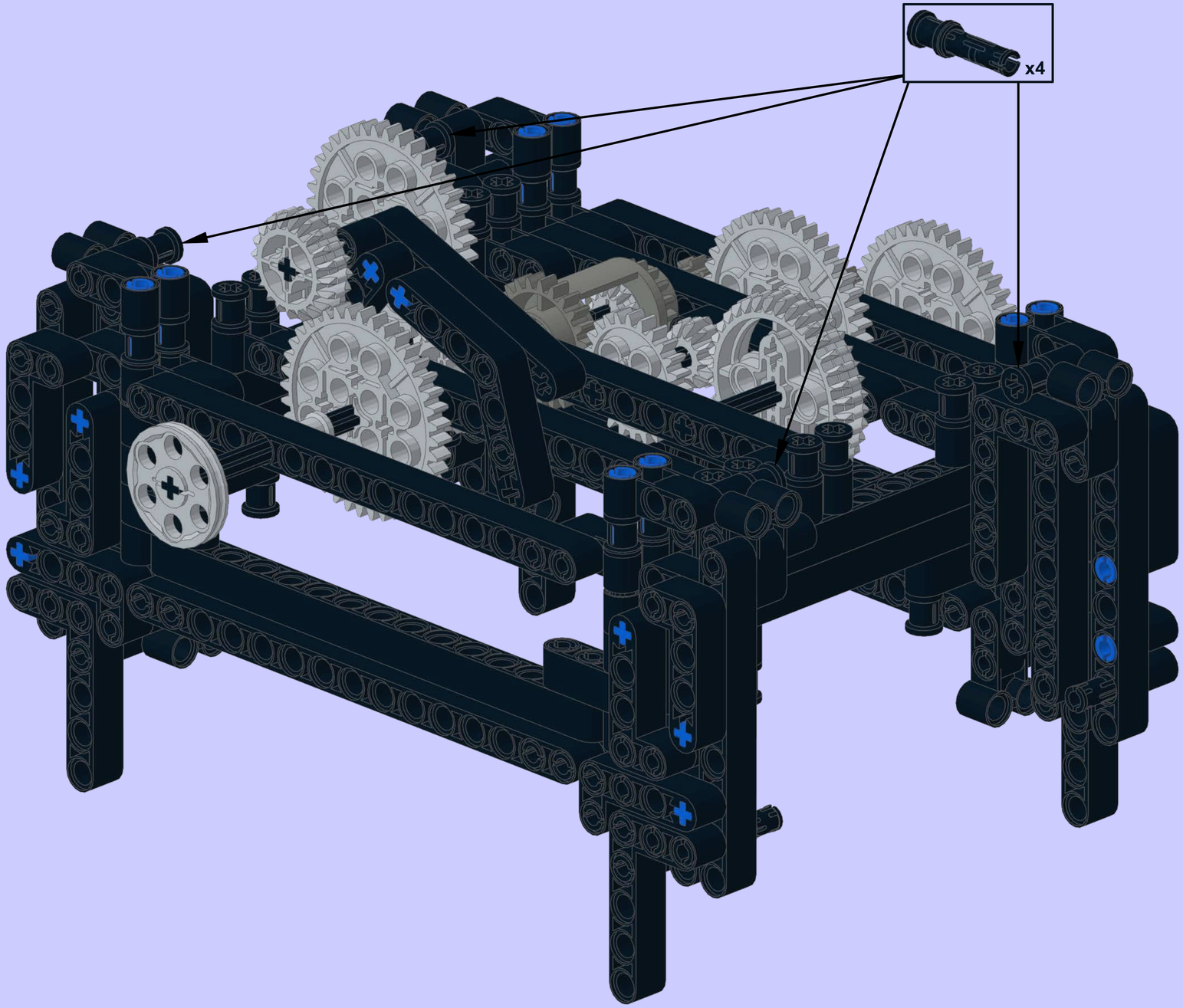

2

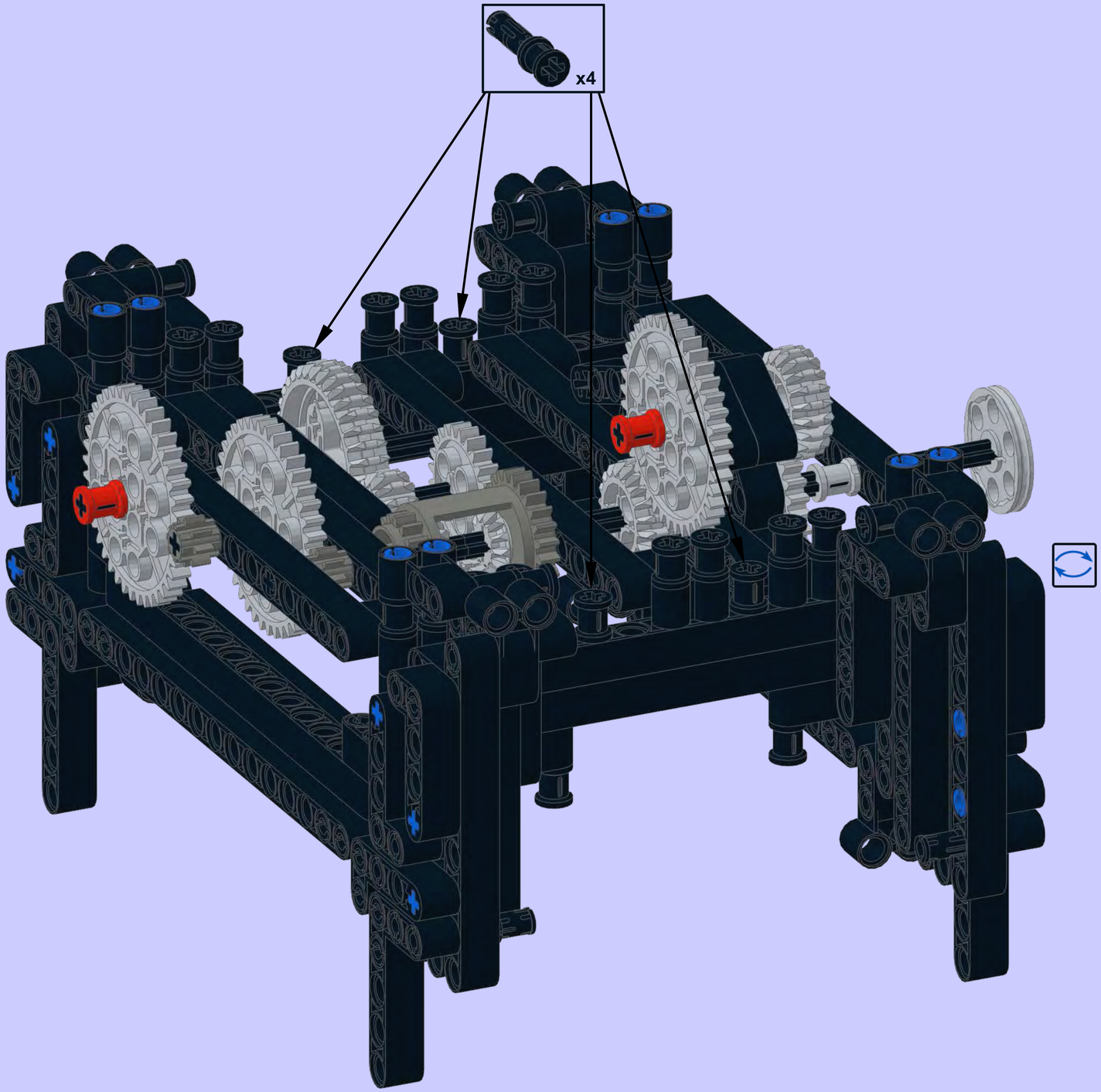

3

2x

2x 3L

1x

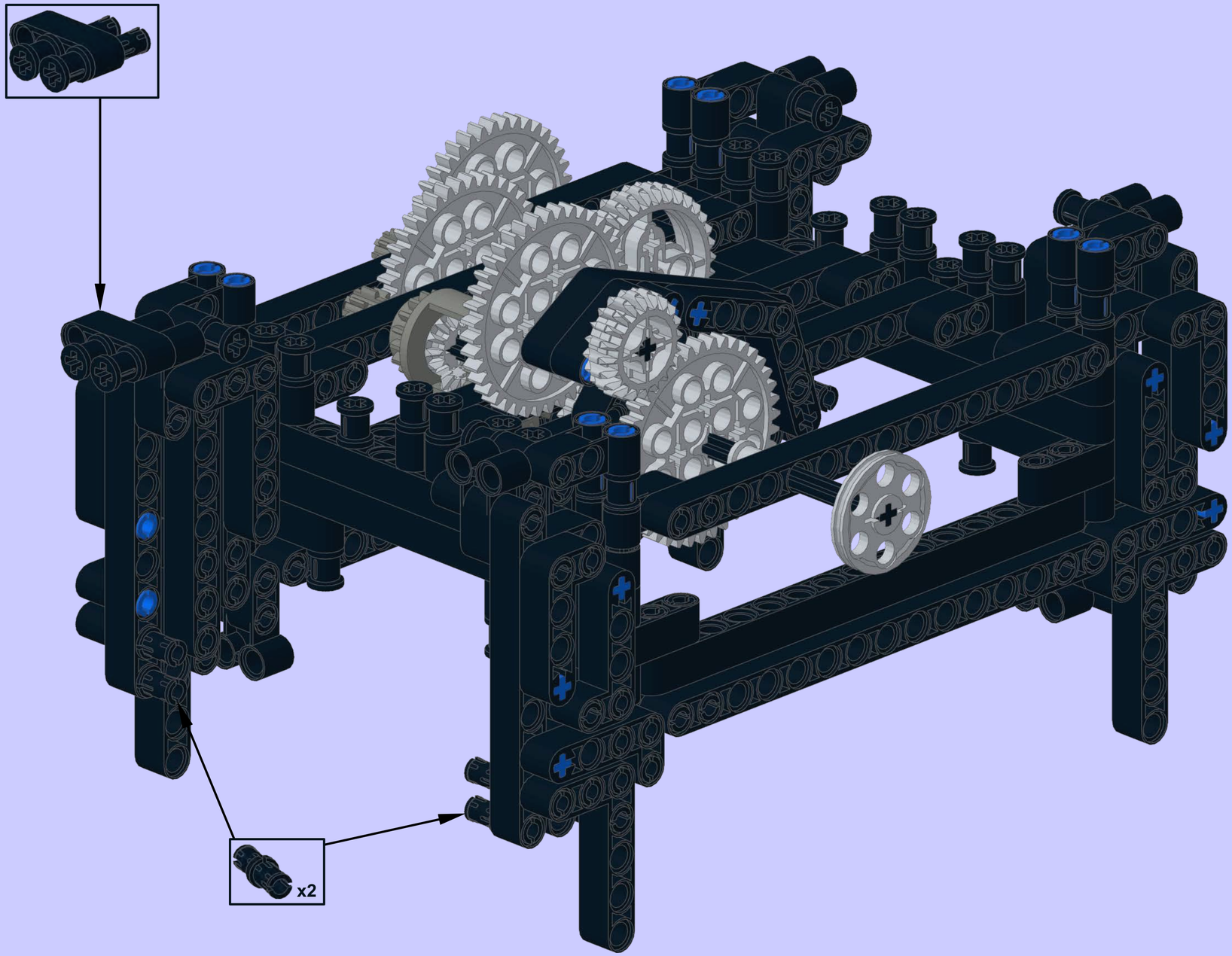

4

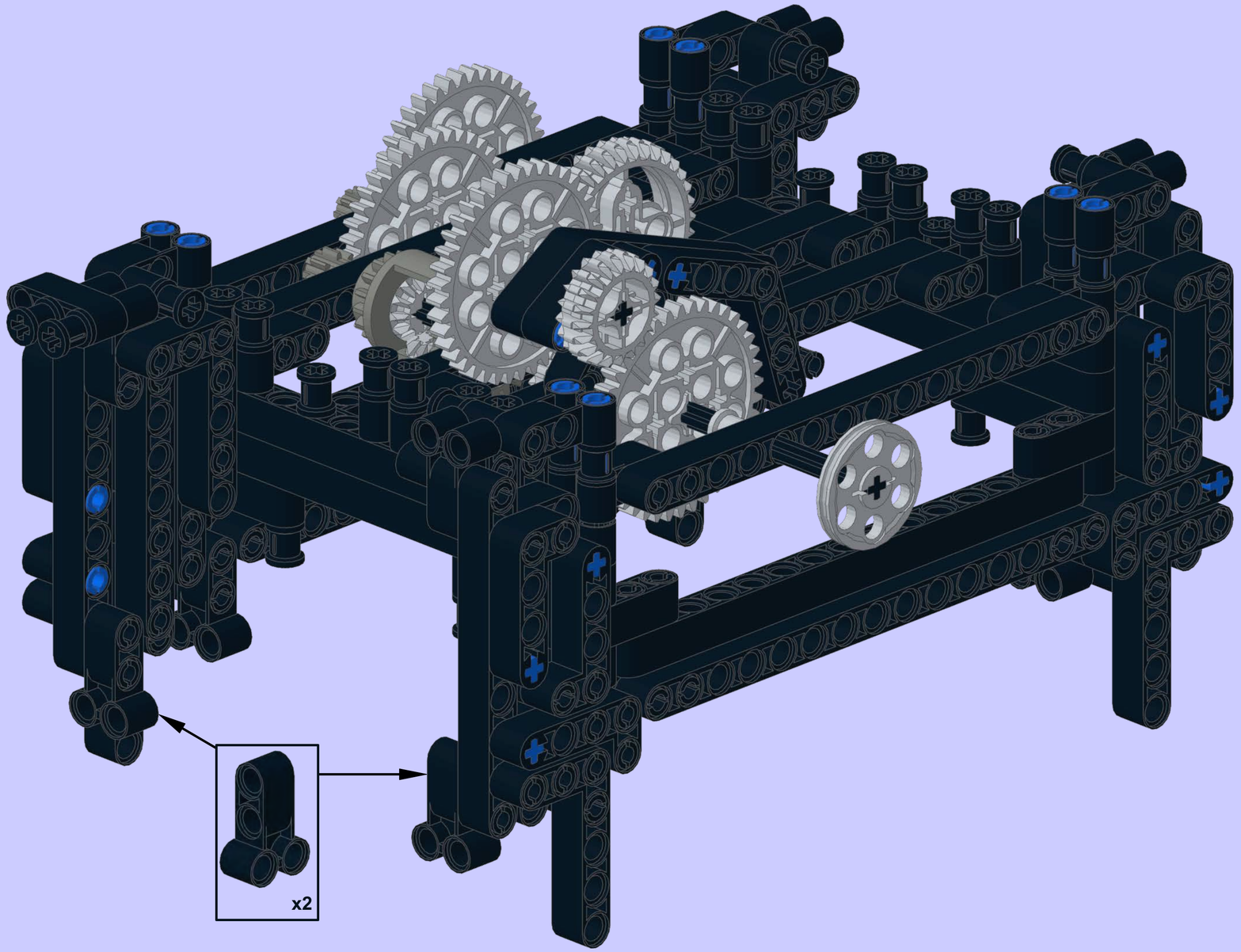

5

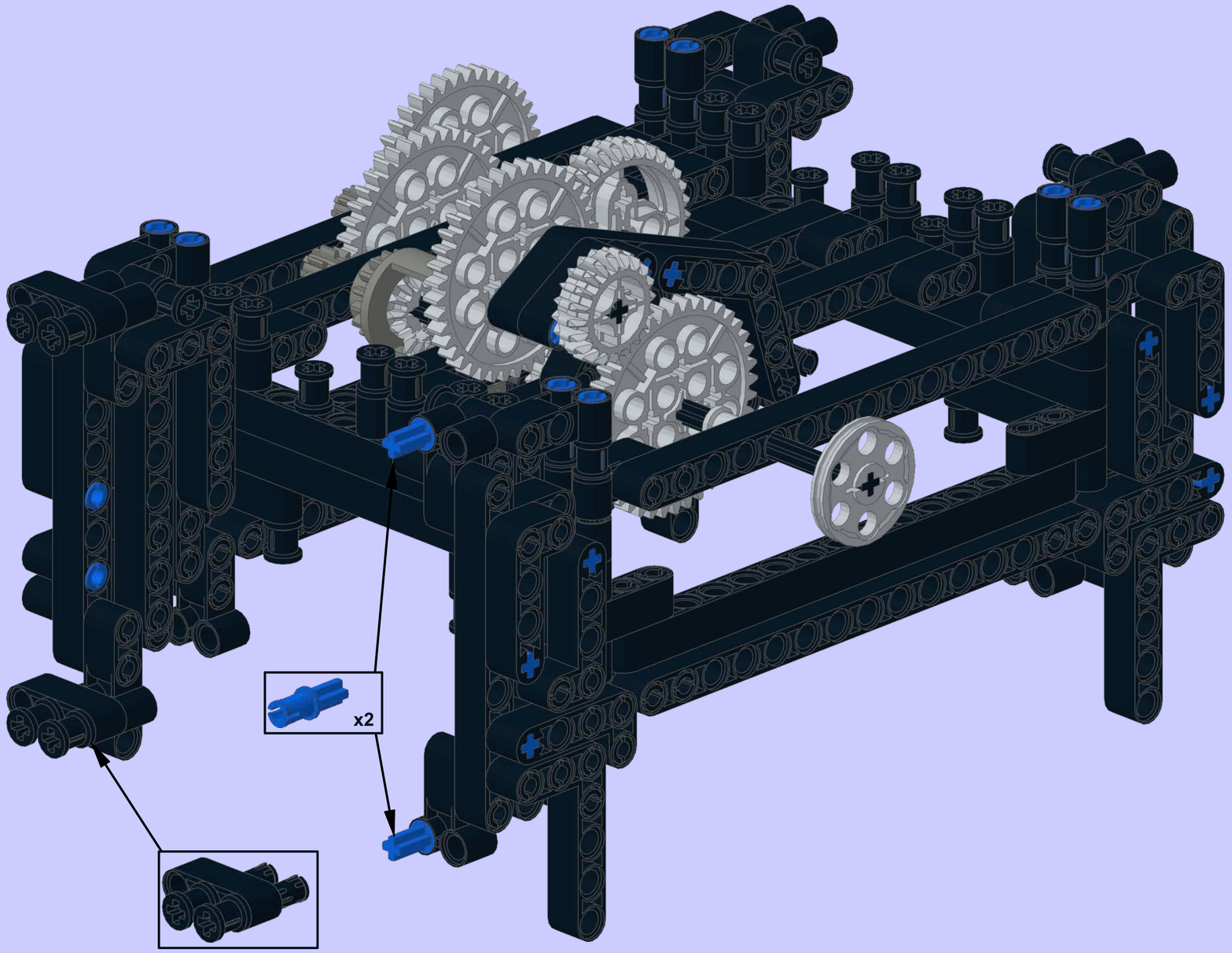

# Rear Rack Buffers - 8 required

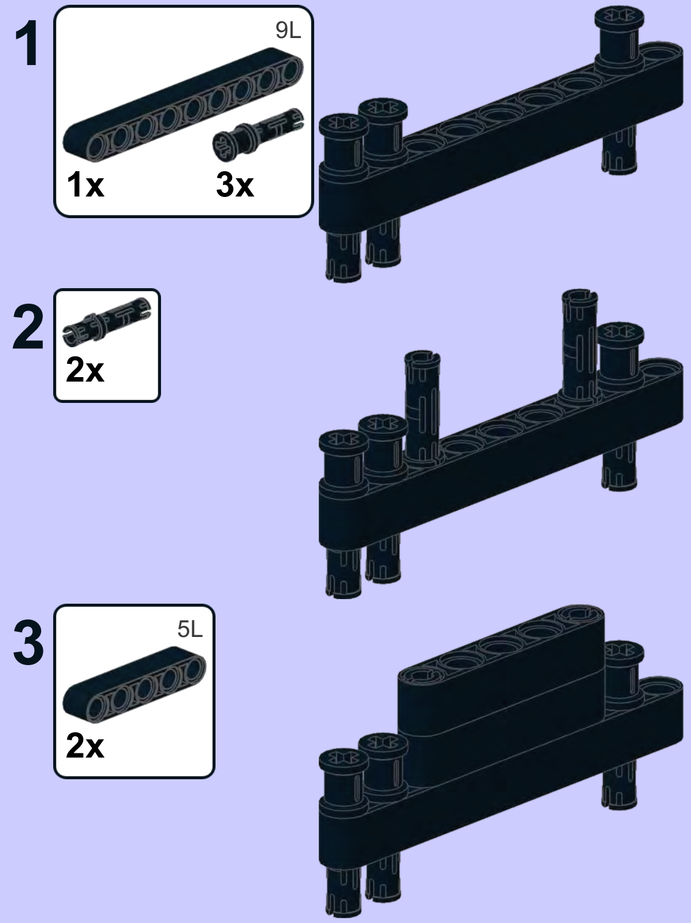


x8

6

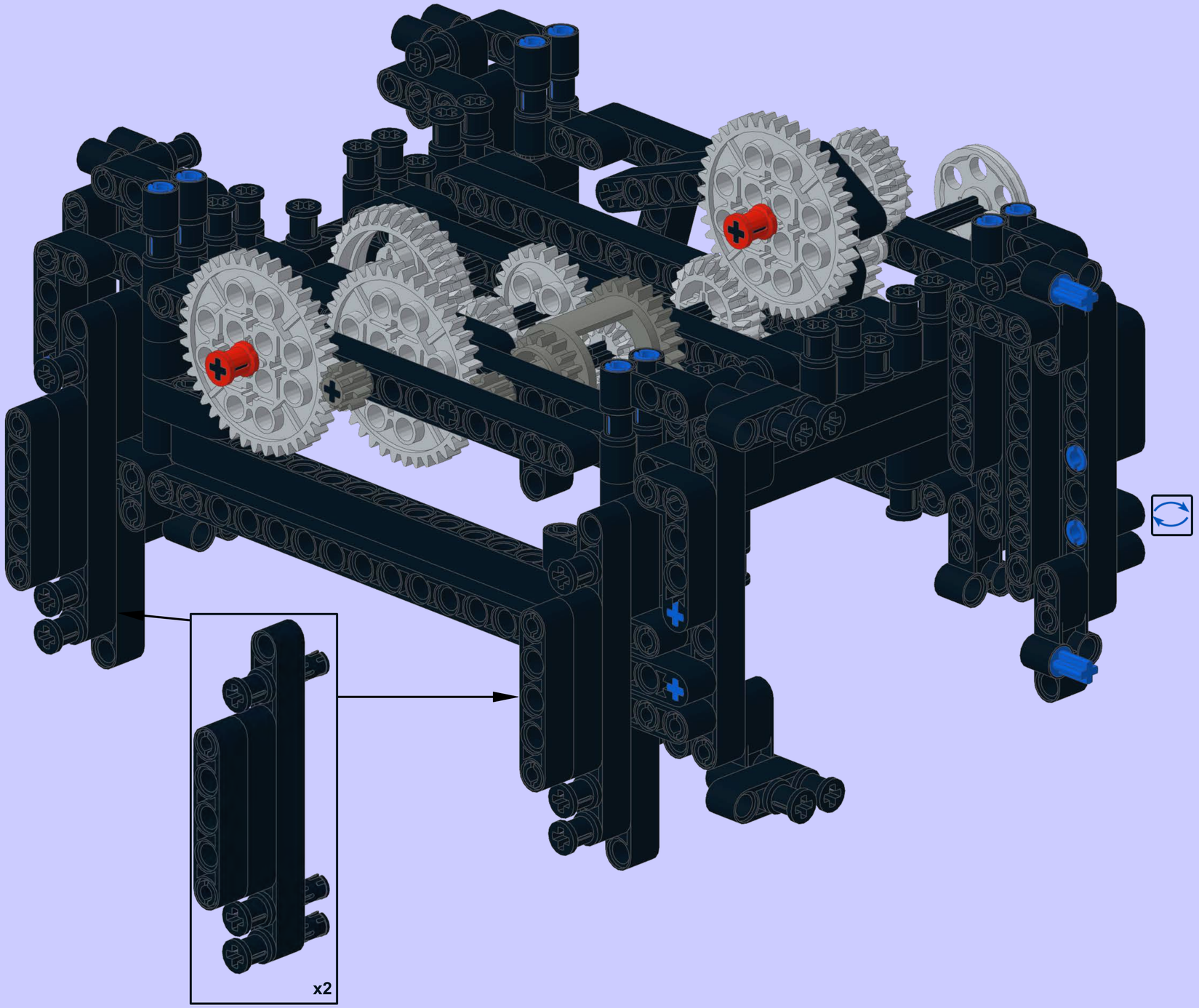

7

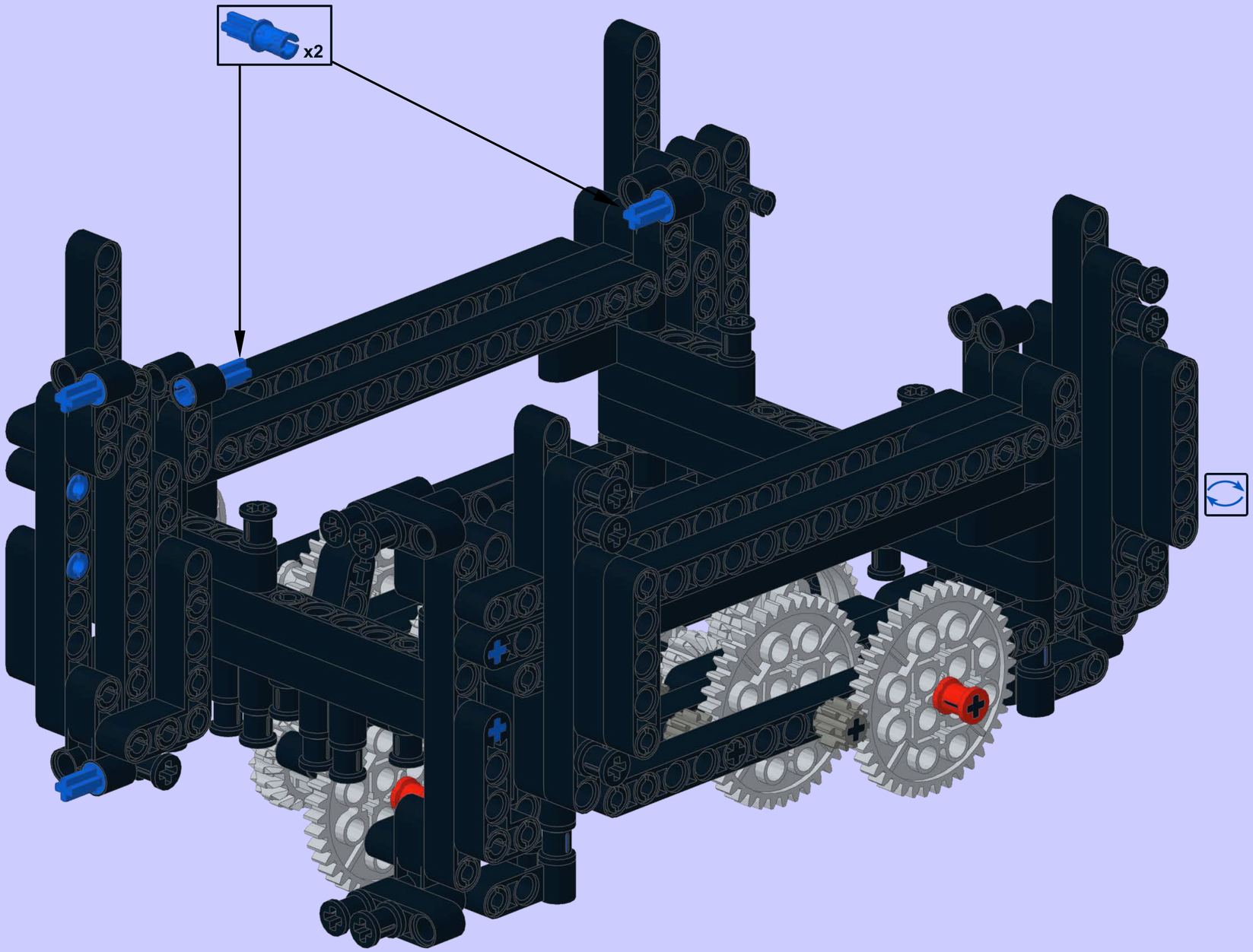

8 2x

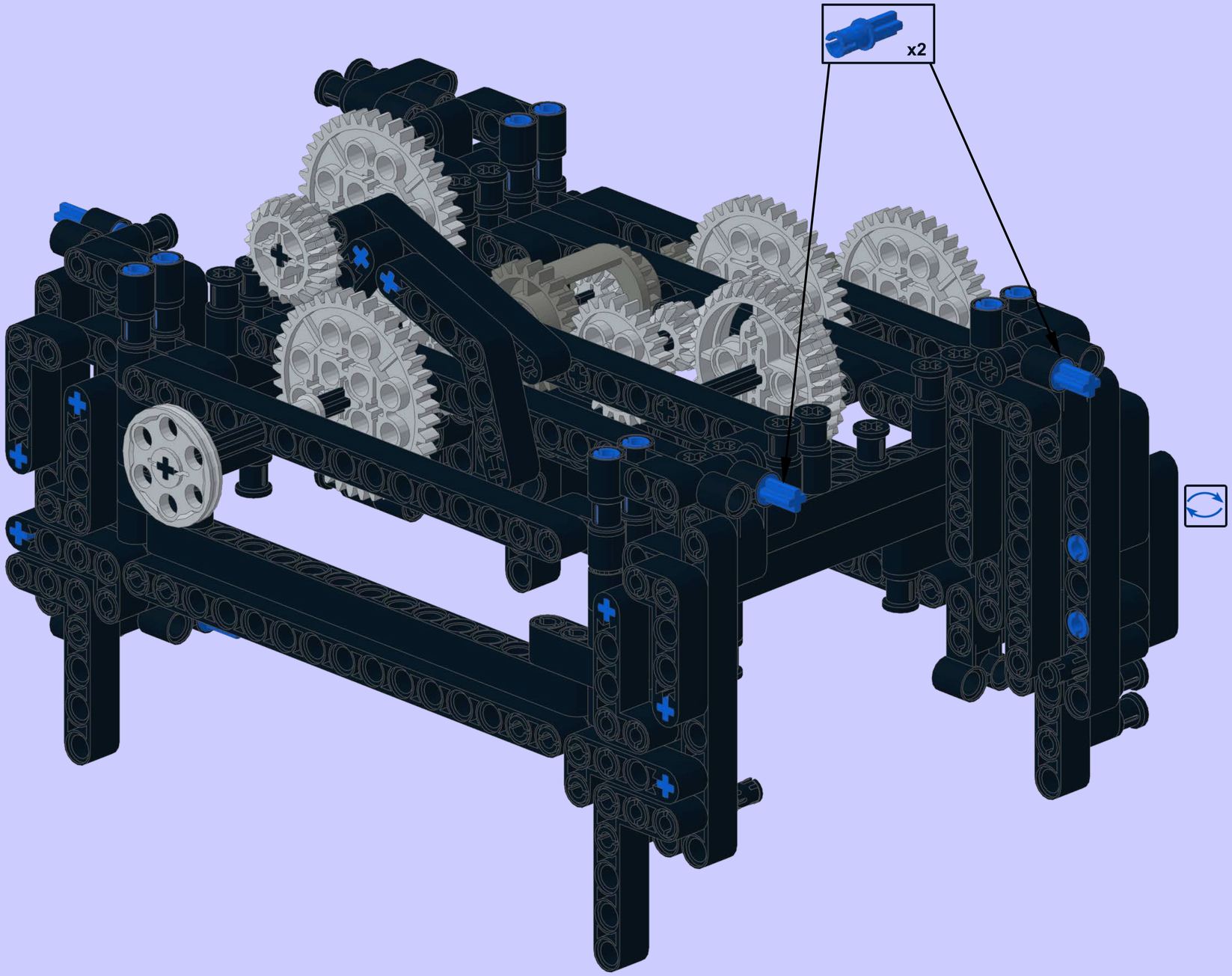

9

2x

2x

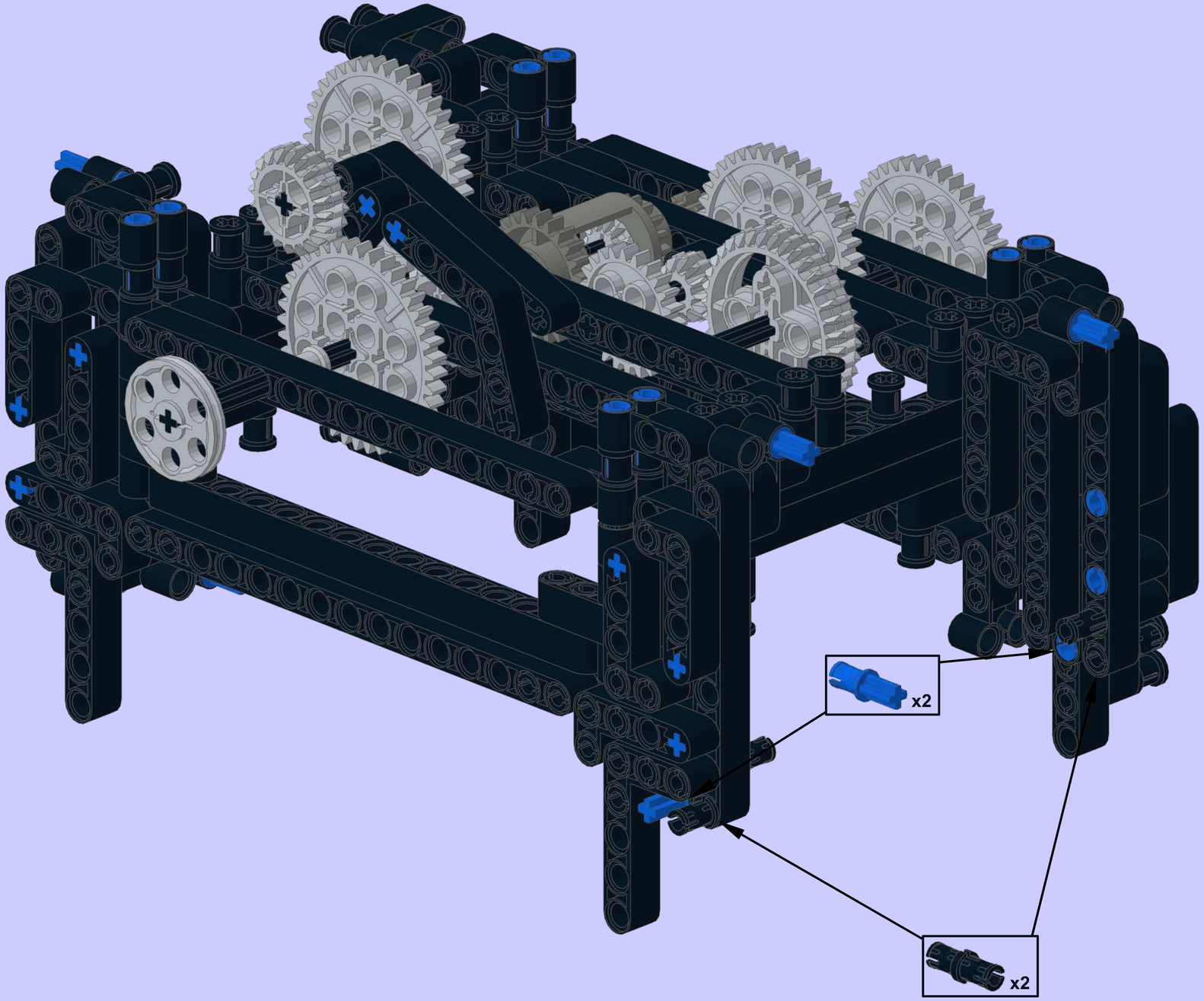

10

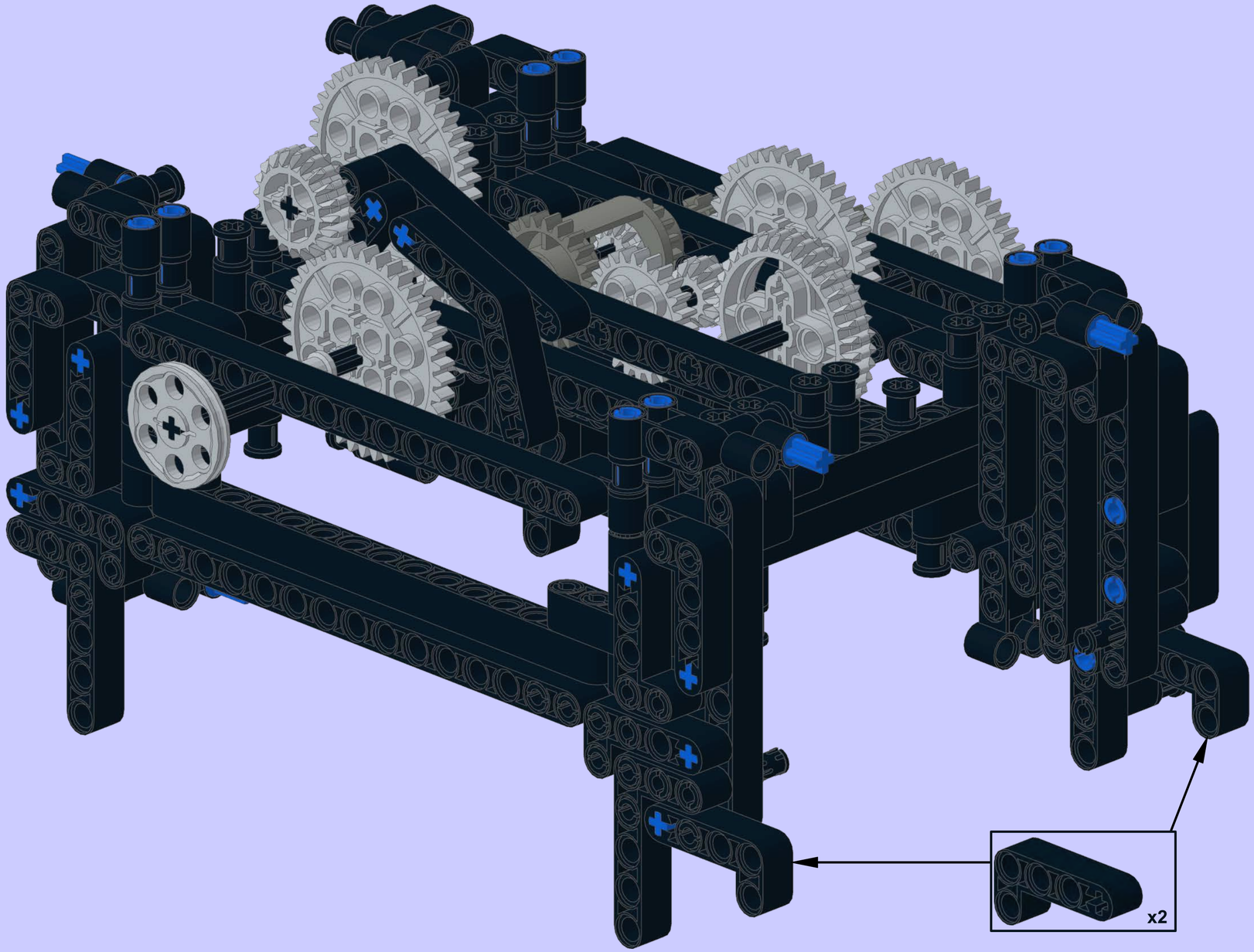

1

## Left Top Back (LTB) rack - using standard base

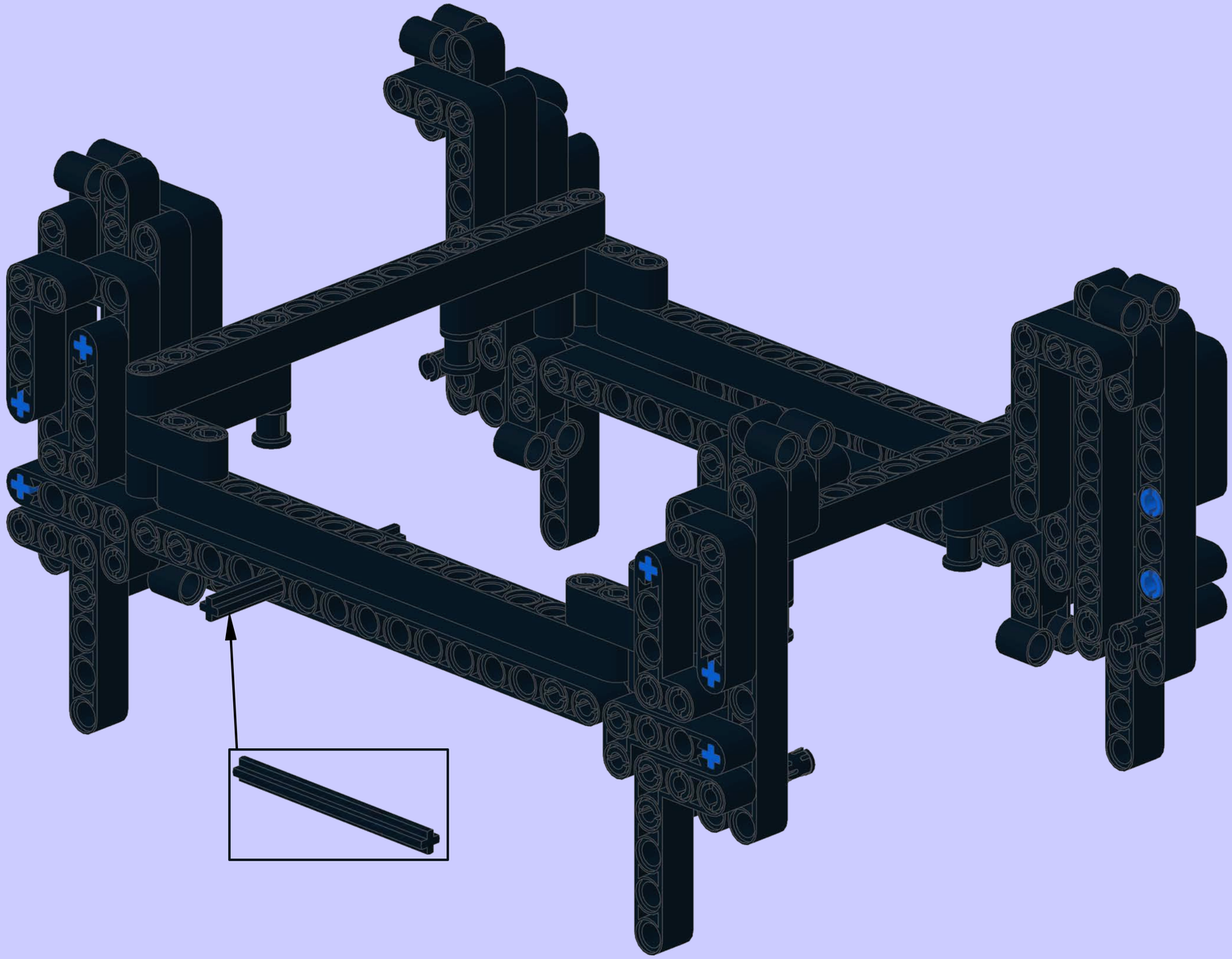

2

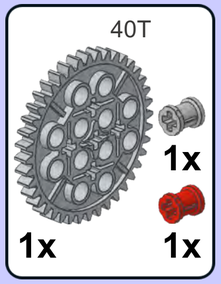


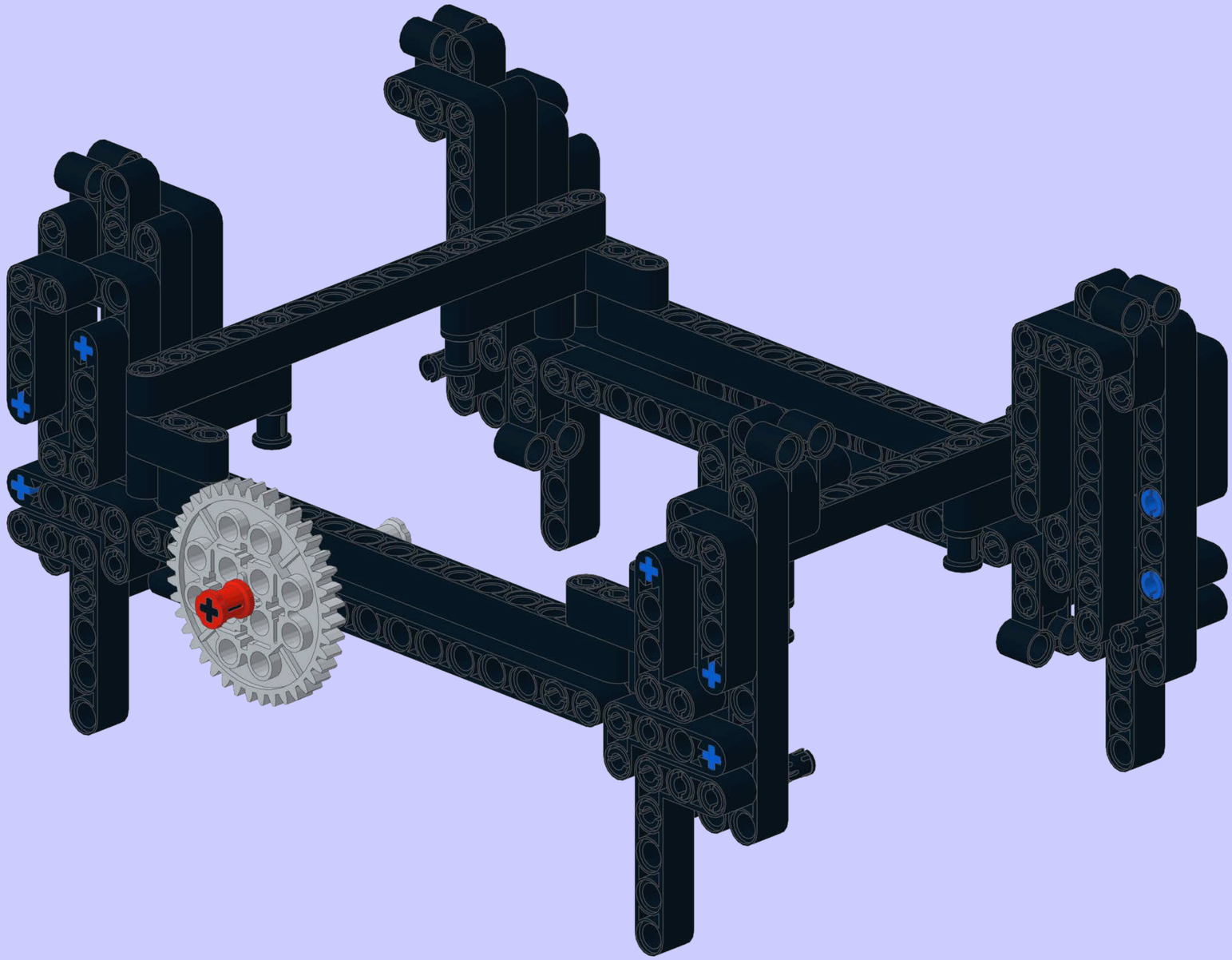

# Left Top Back (LTB) calculator - multiply by 5, divide by 223

1

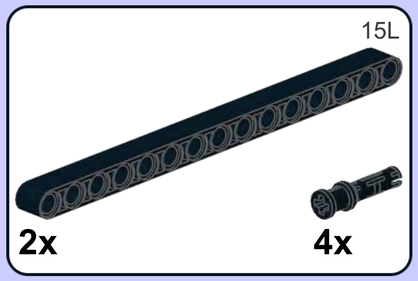


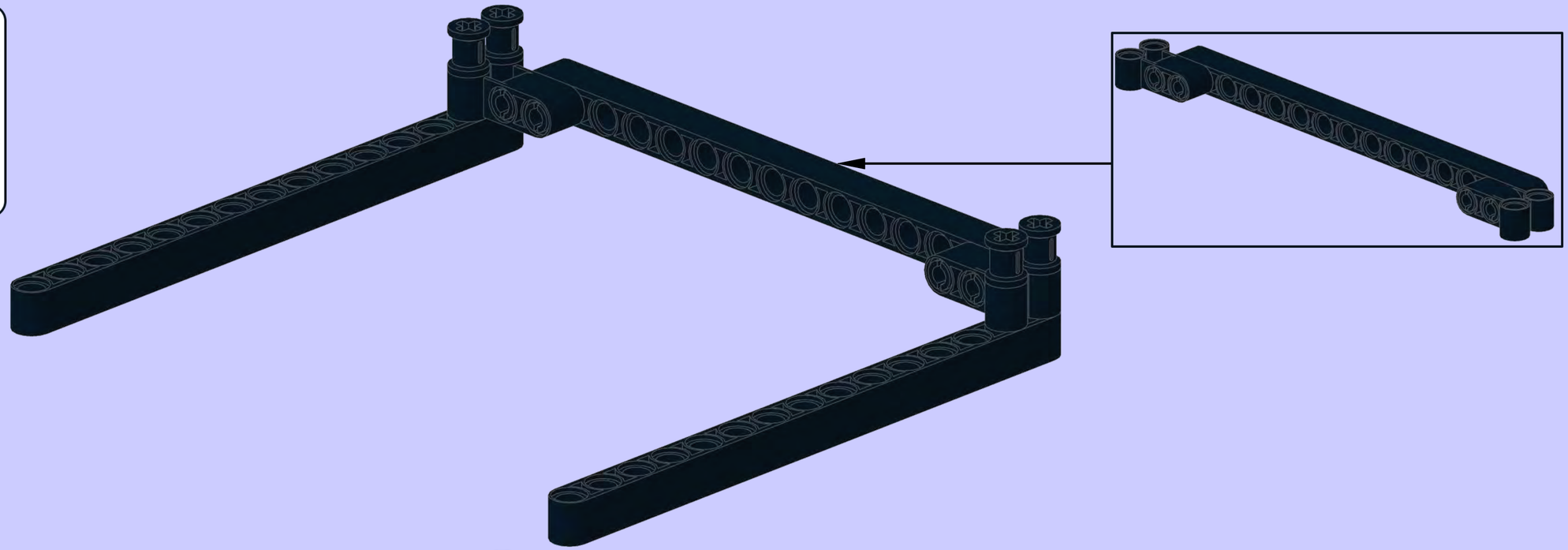

2

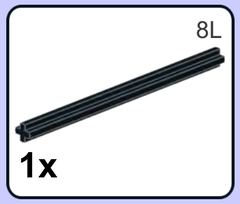


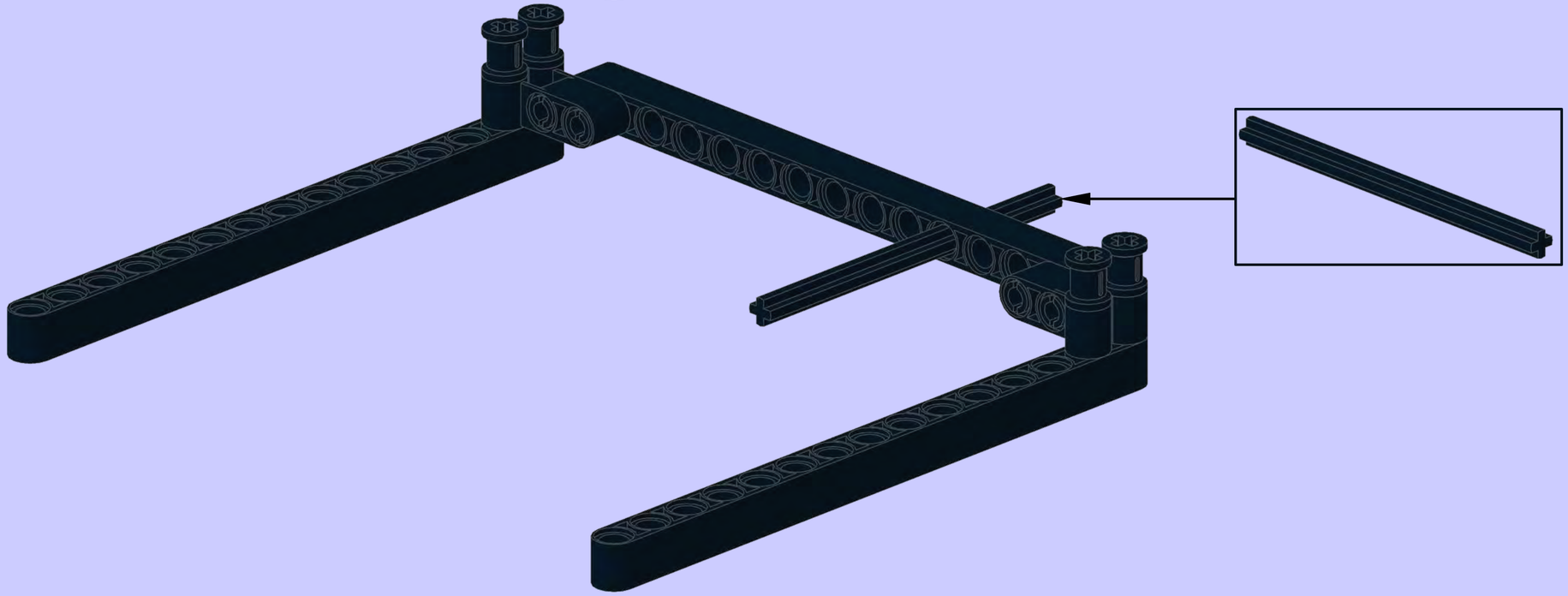

**3**

8T

**1x**

4L

**1x**

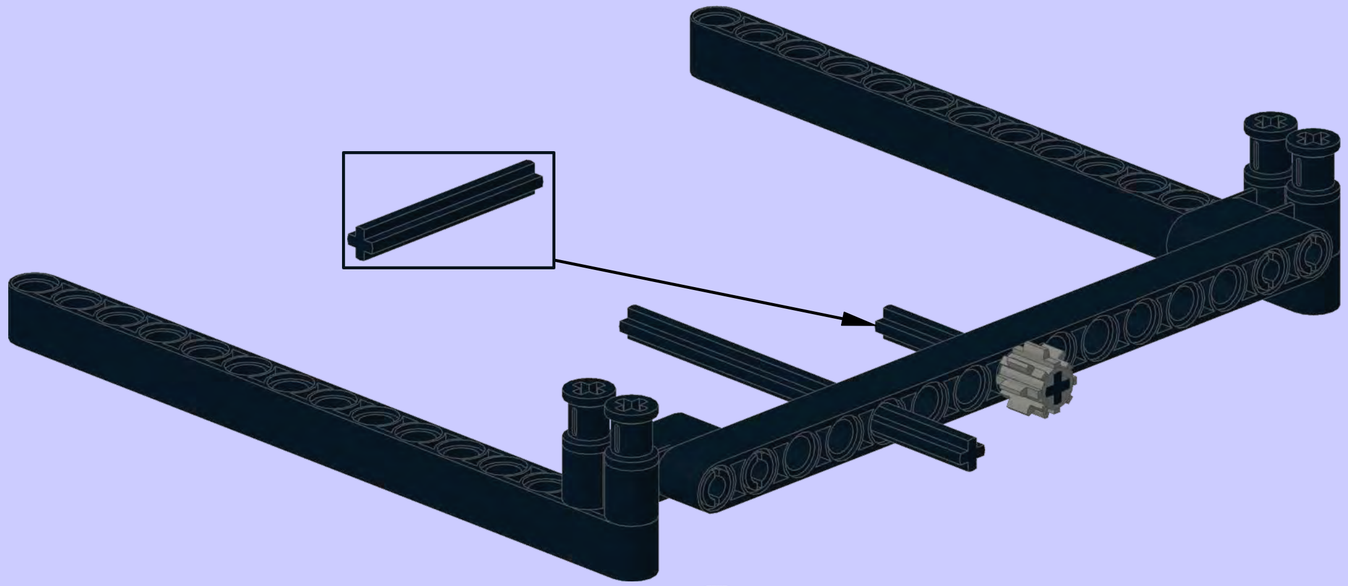

**4**

**1x**

40T

**1x**

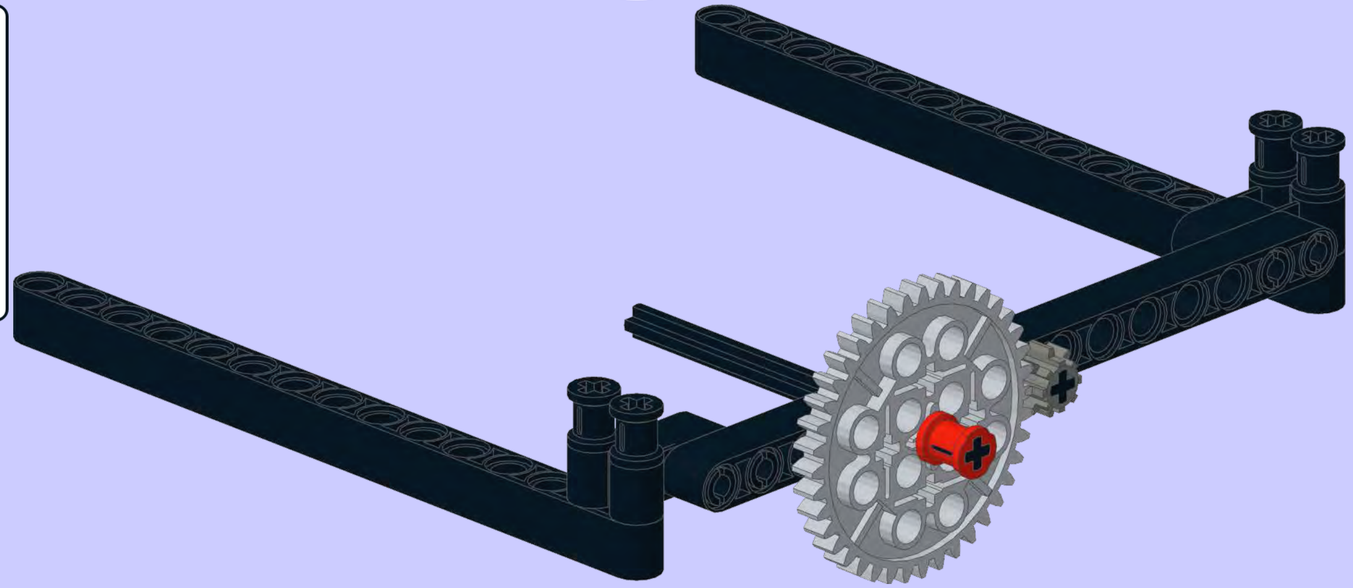

**5**

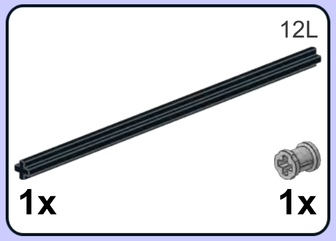


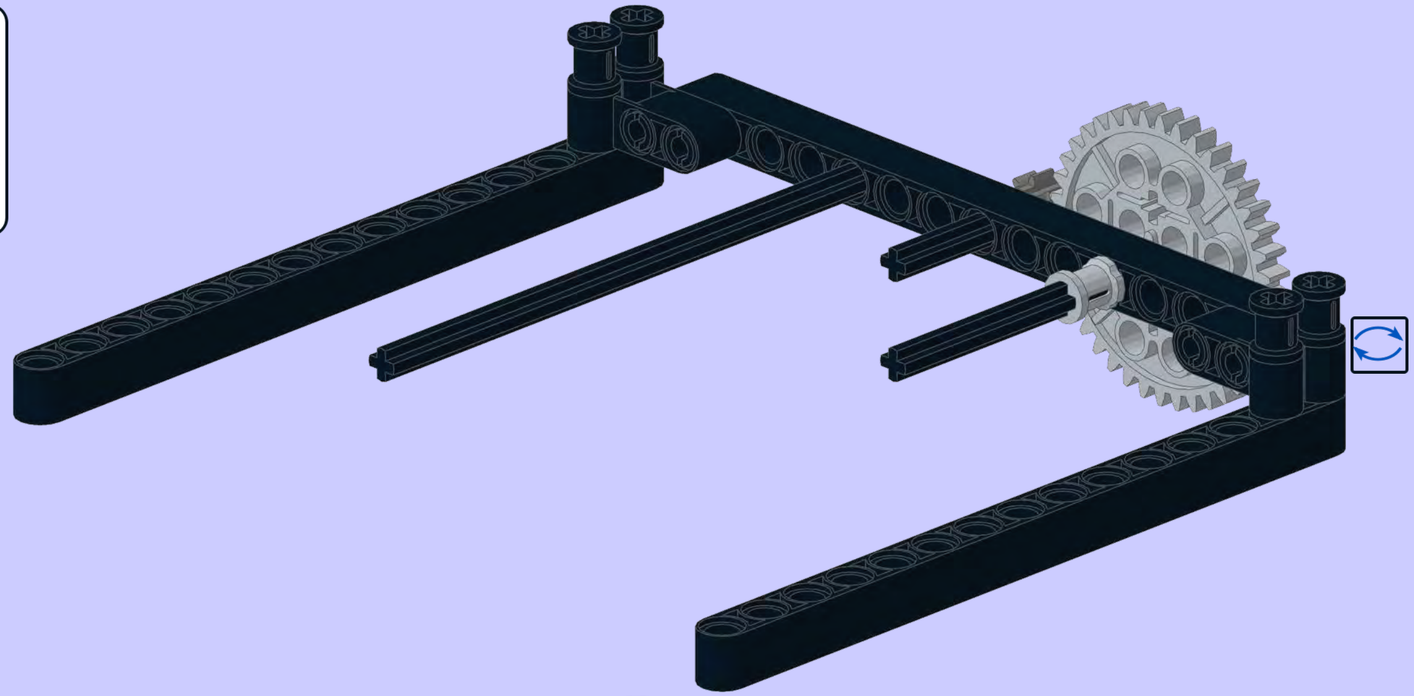

**6**

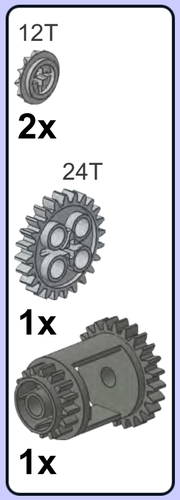


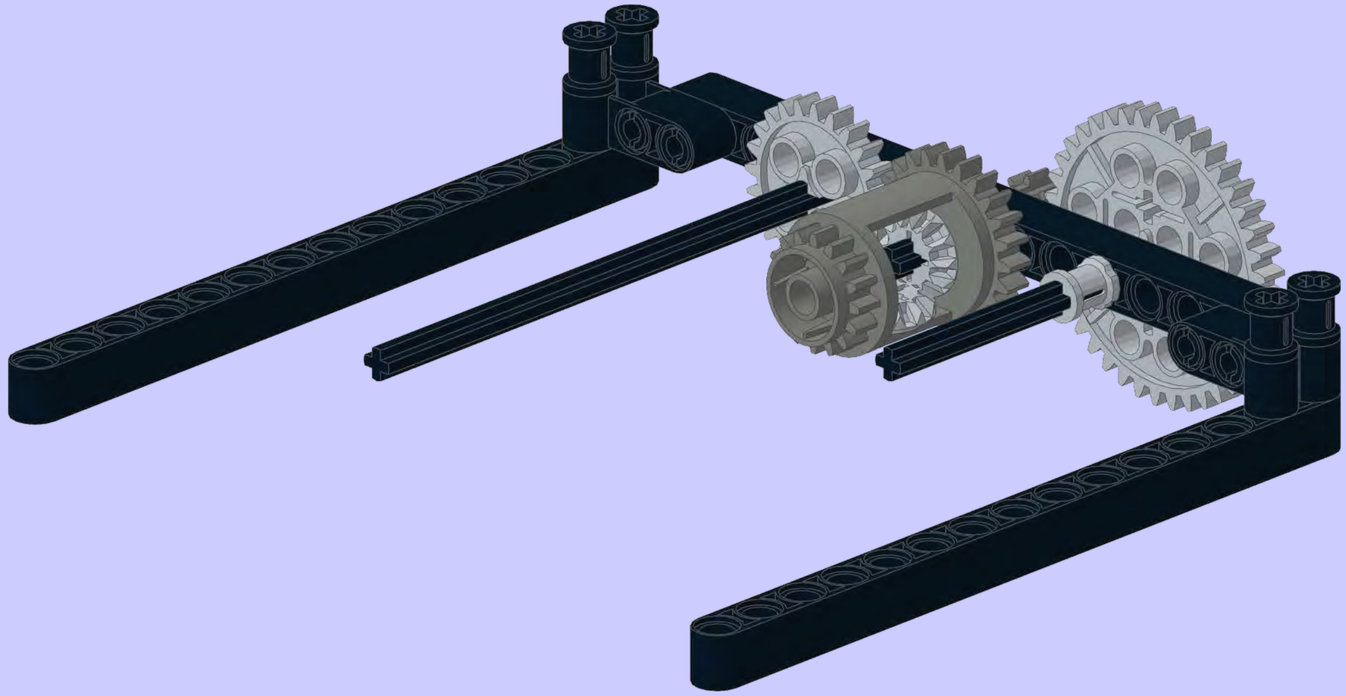

## Reinforced 15 beam cross support - 2 required

1

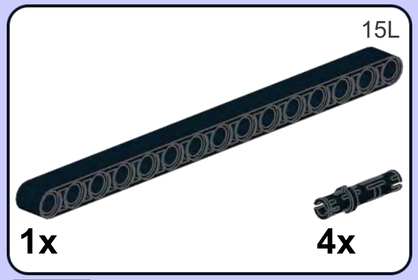


2

3

4

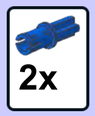


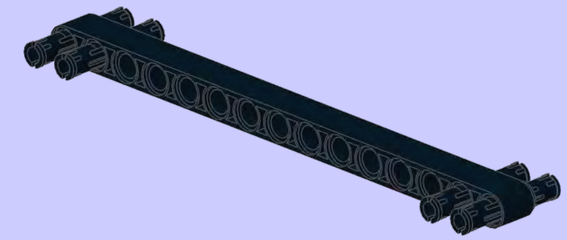

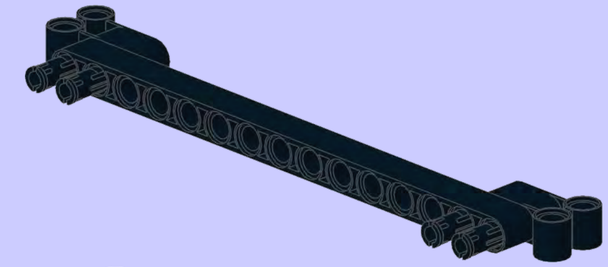

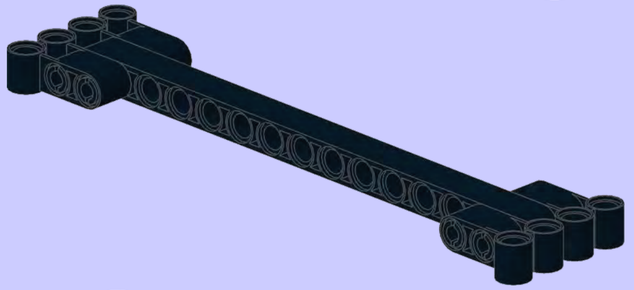

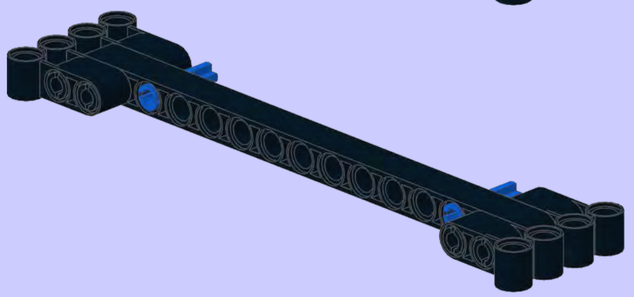

5

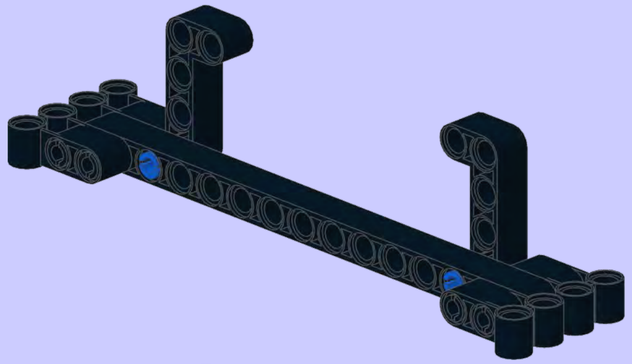

6

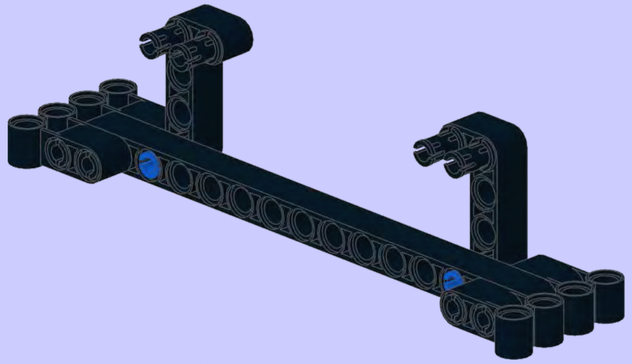

7

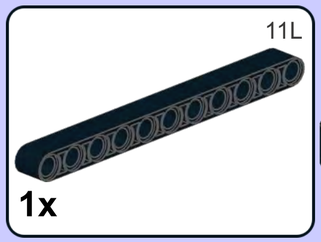


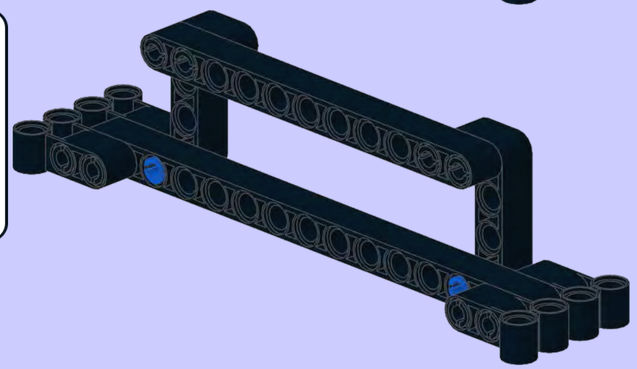

x2

**7**

12T

**1x**

4L

**1x**

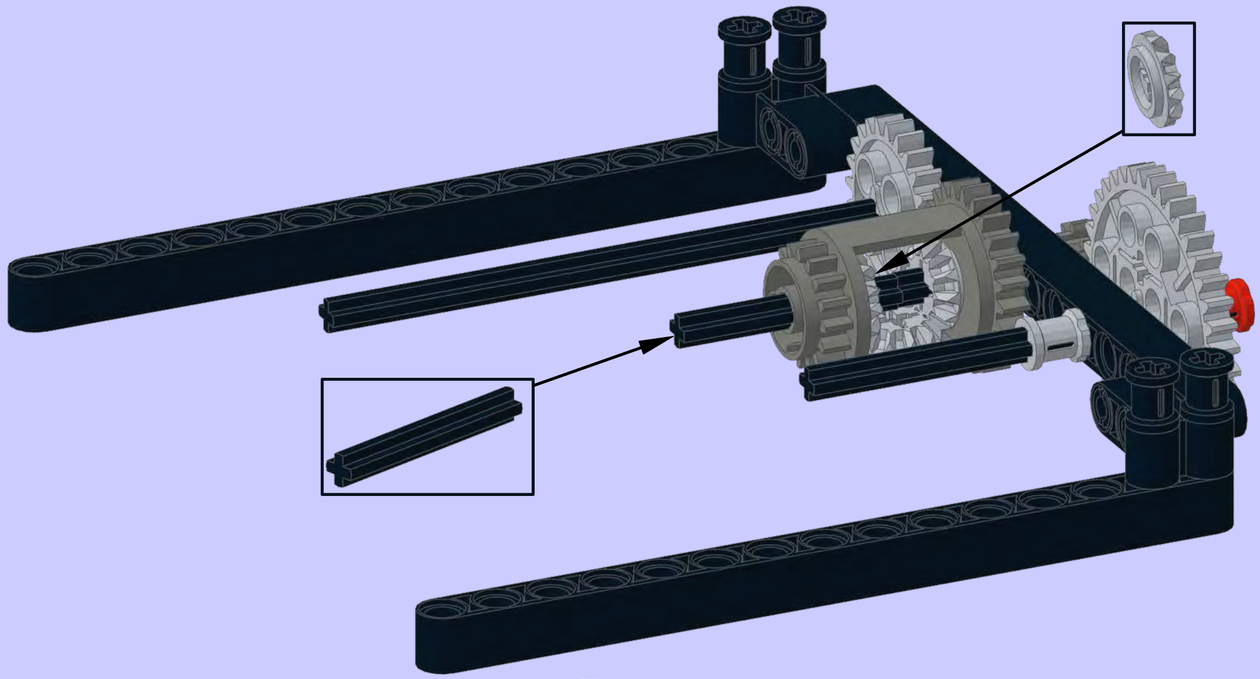

**8**

**8x**

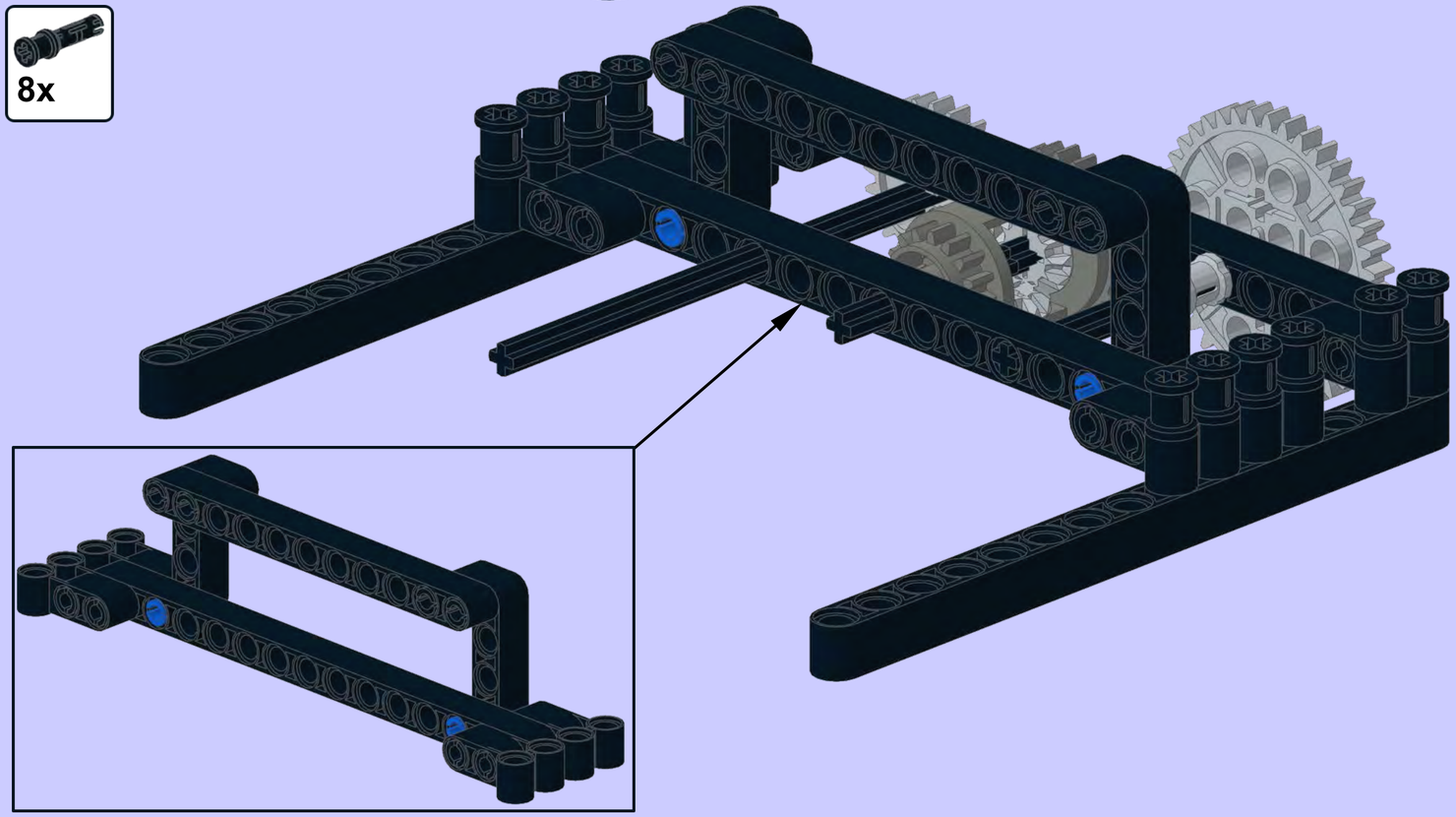

9

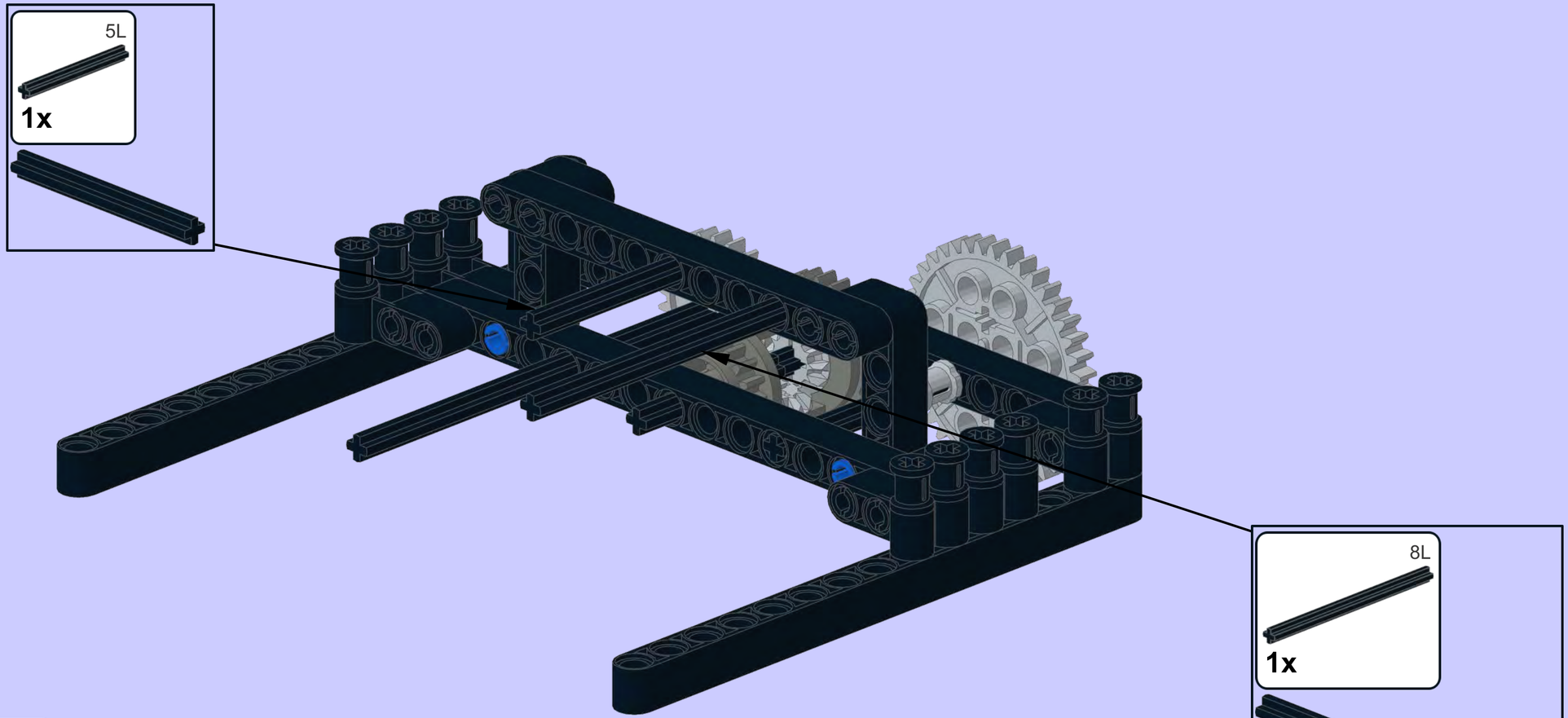


10

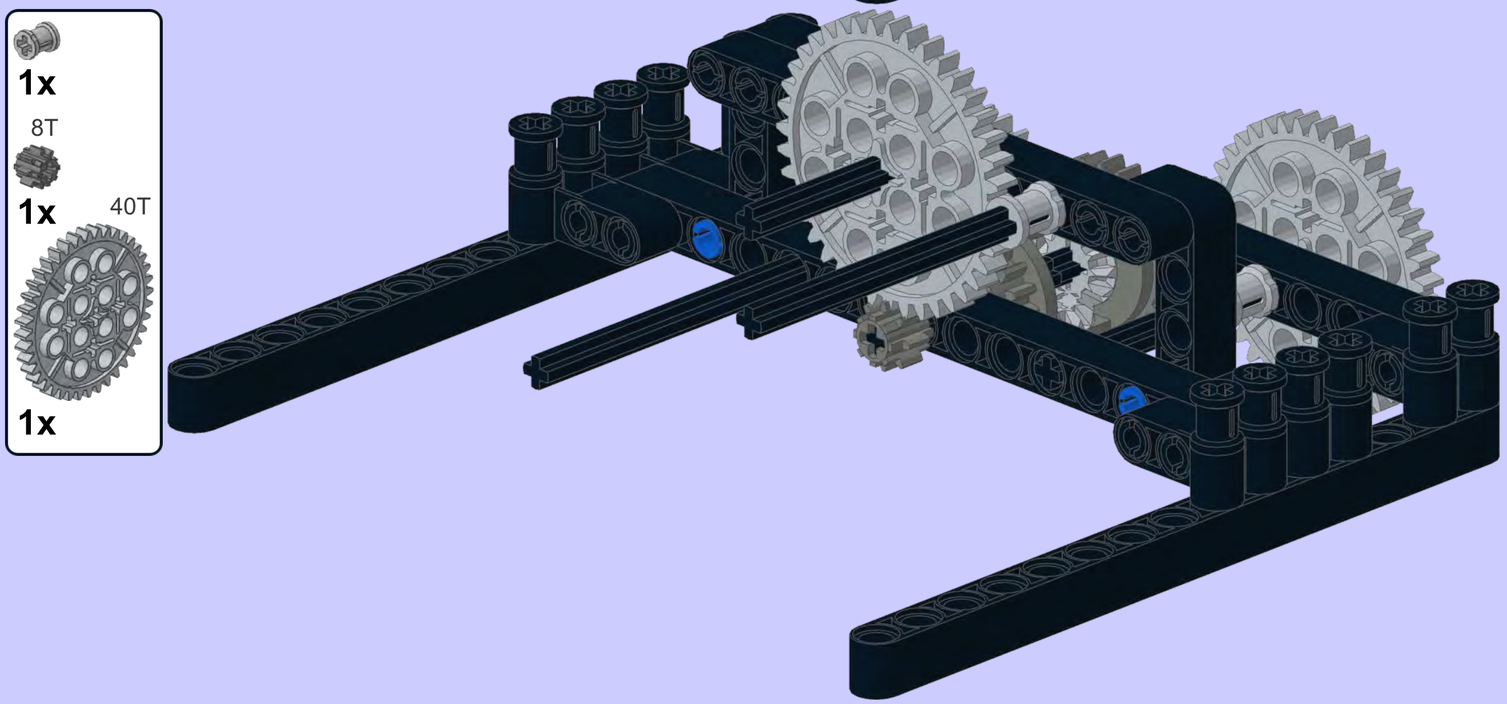

**11**

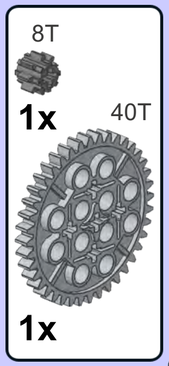


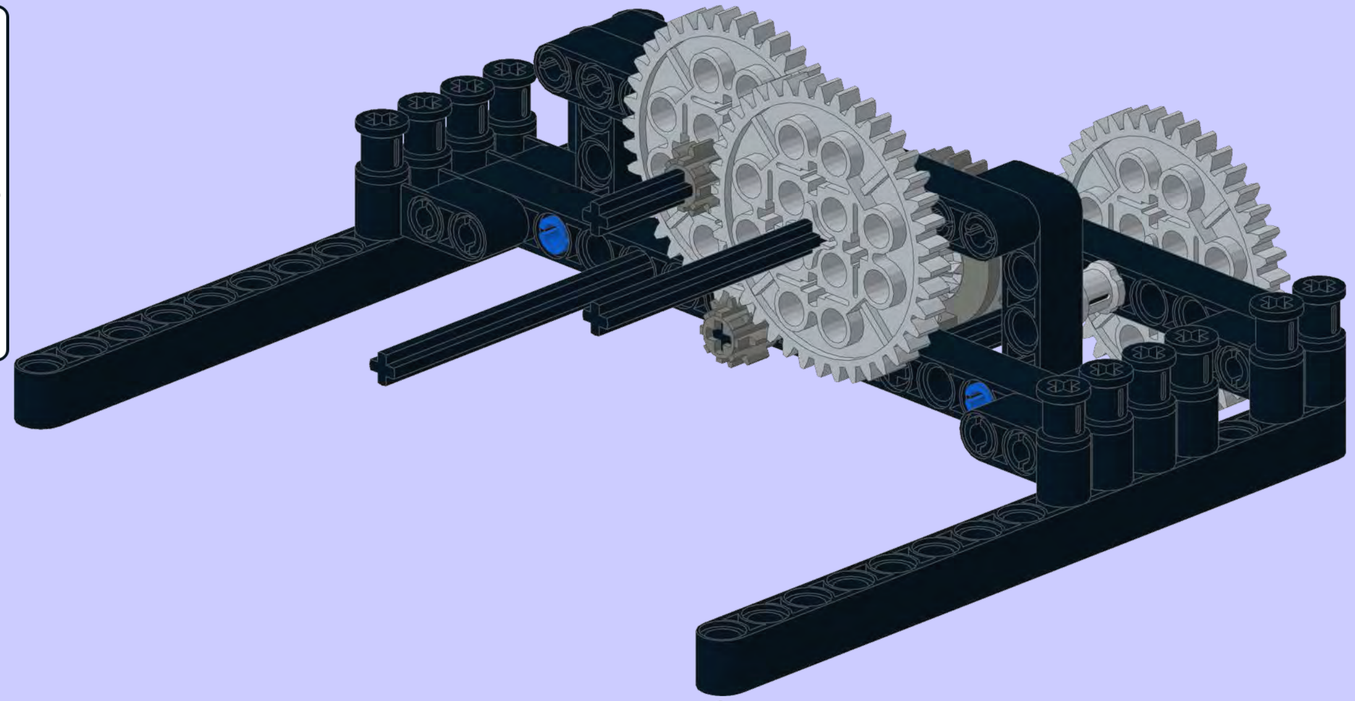

**12**

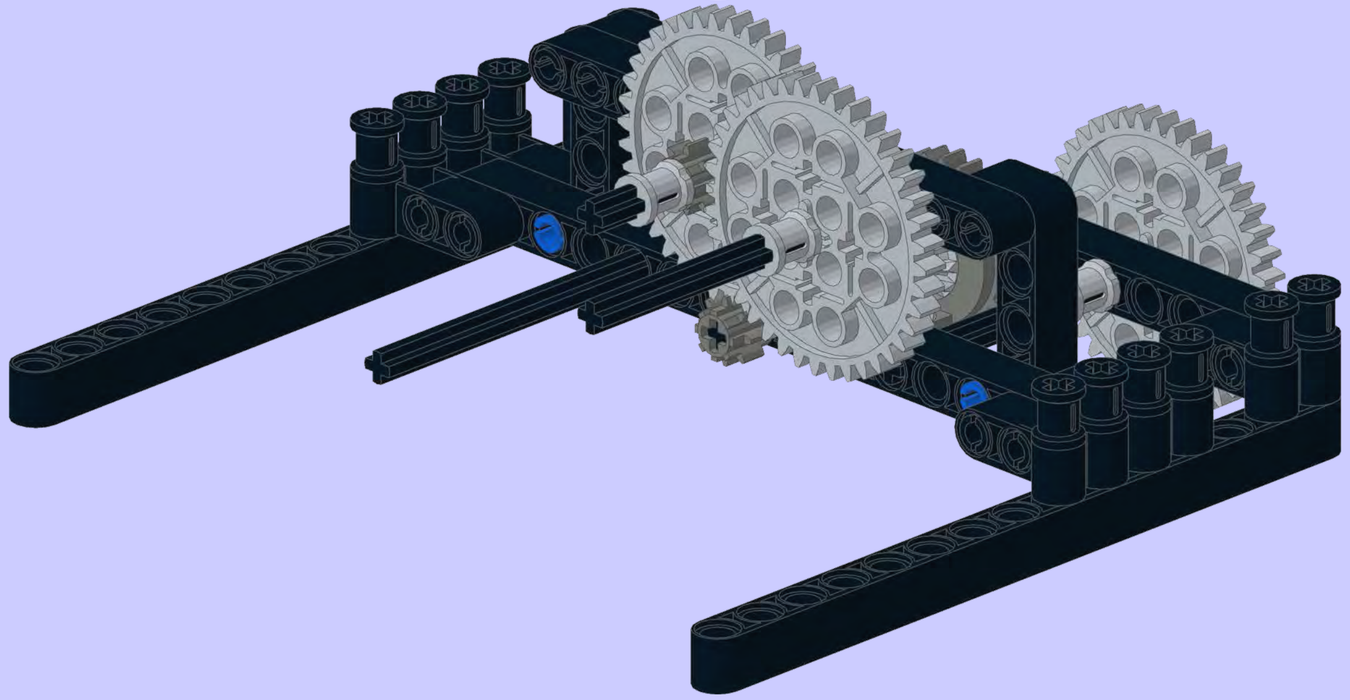

**13**

8x

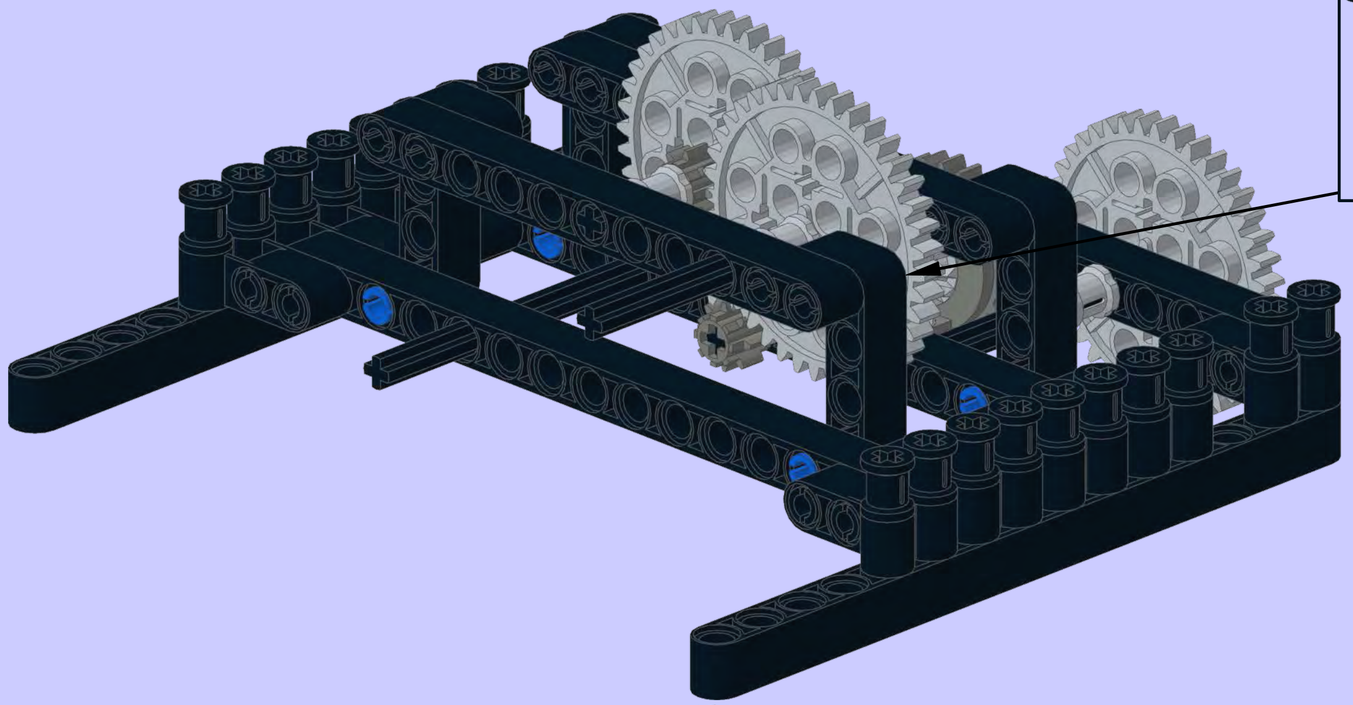

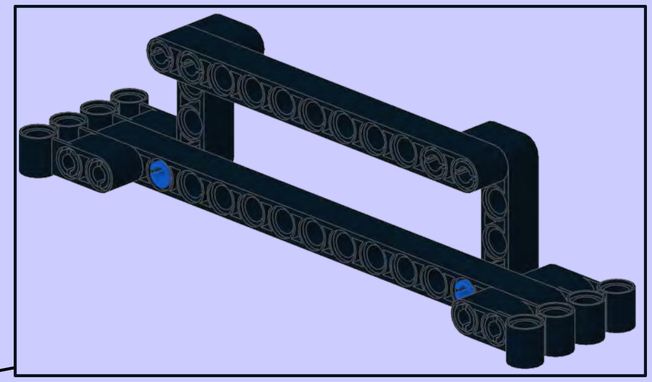

**14**

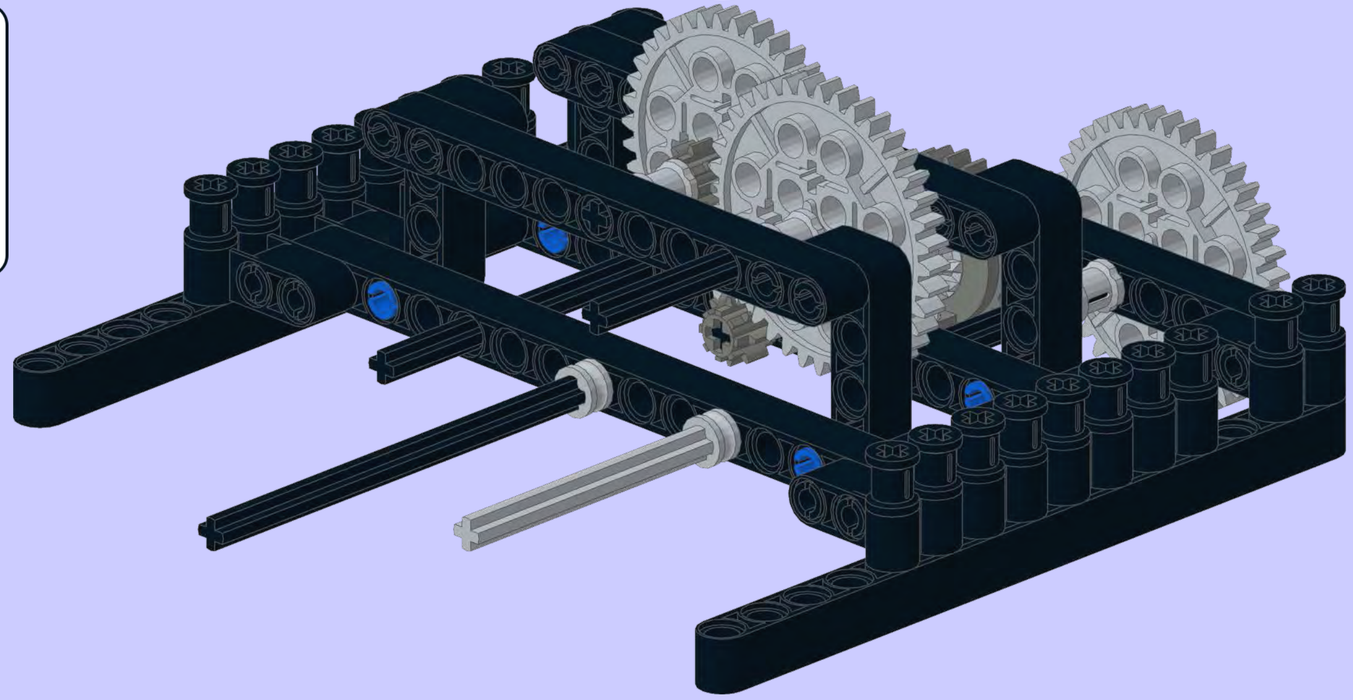

**15**

12T

**1x**

36T

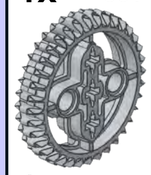

**1x**

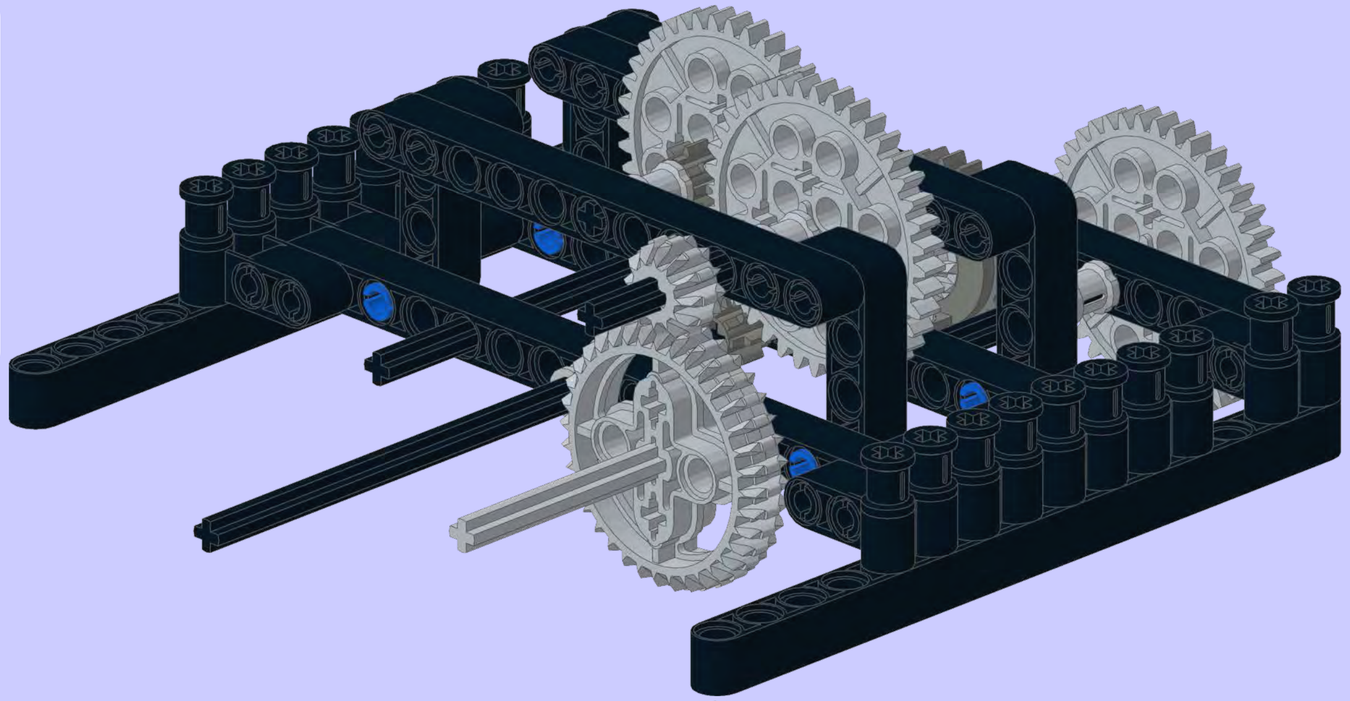

**16**

**1x**

12T

**1x**

5L

**1x**

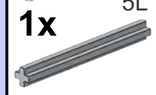

**1x**

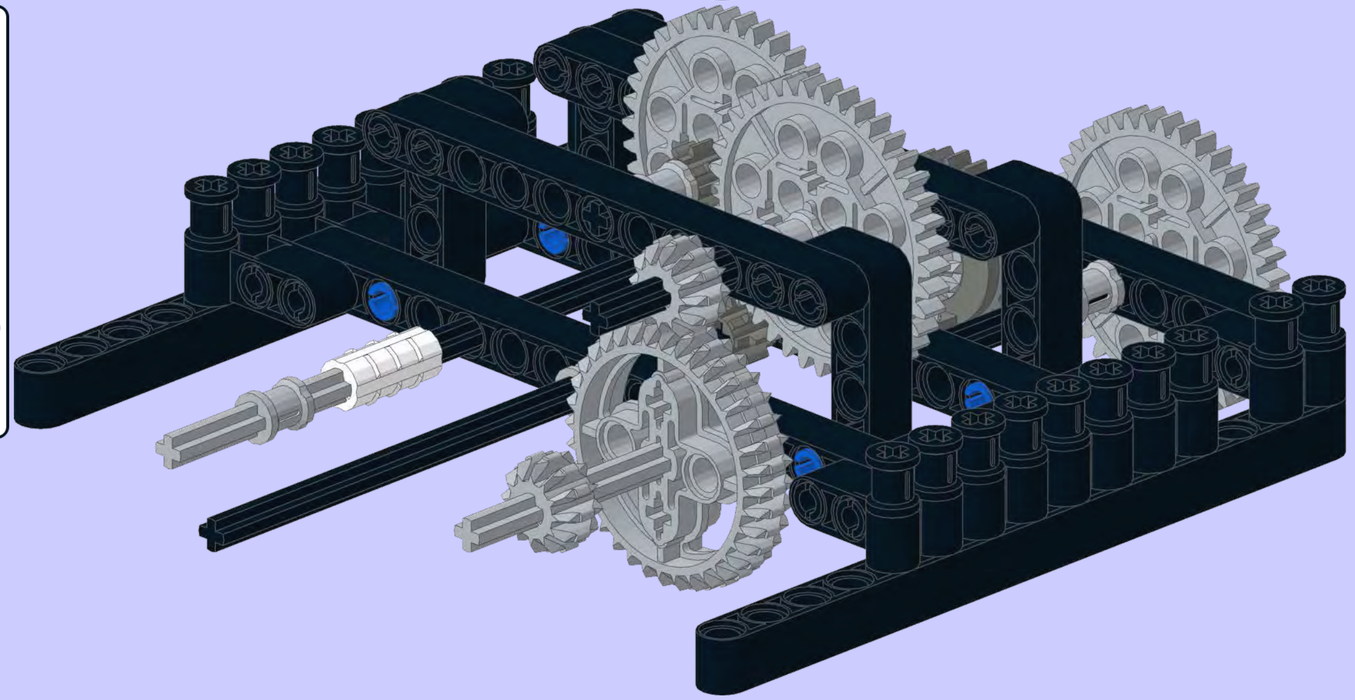

1

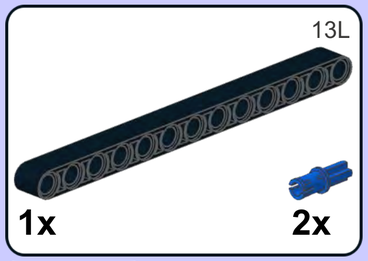


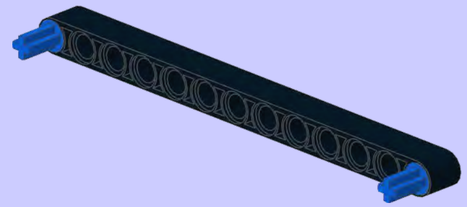

2

3

4

5

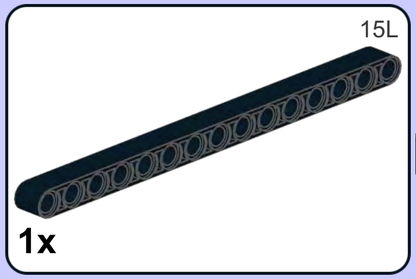


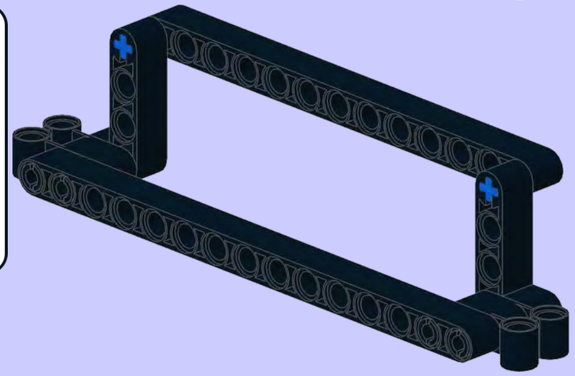

**17**

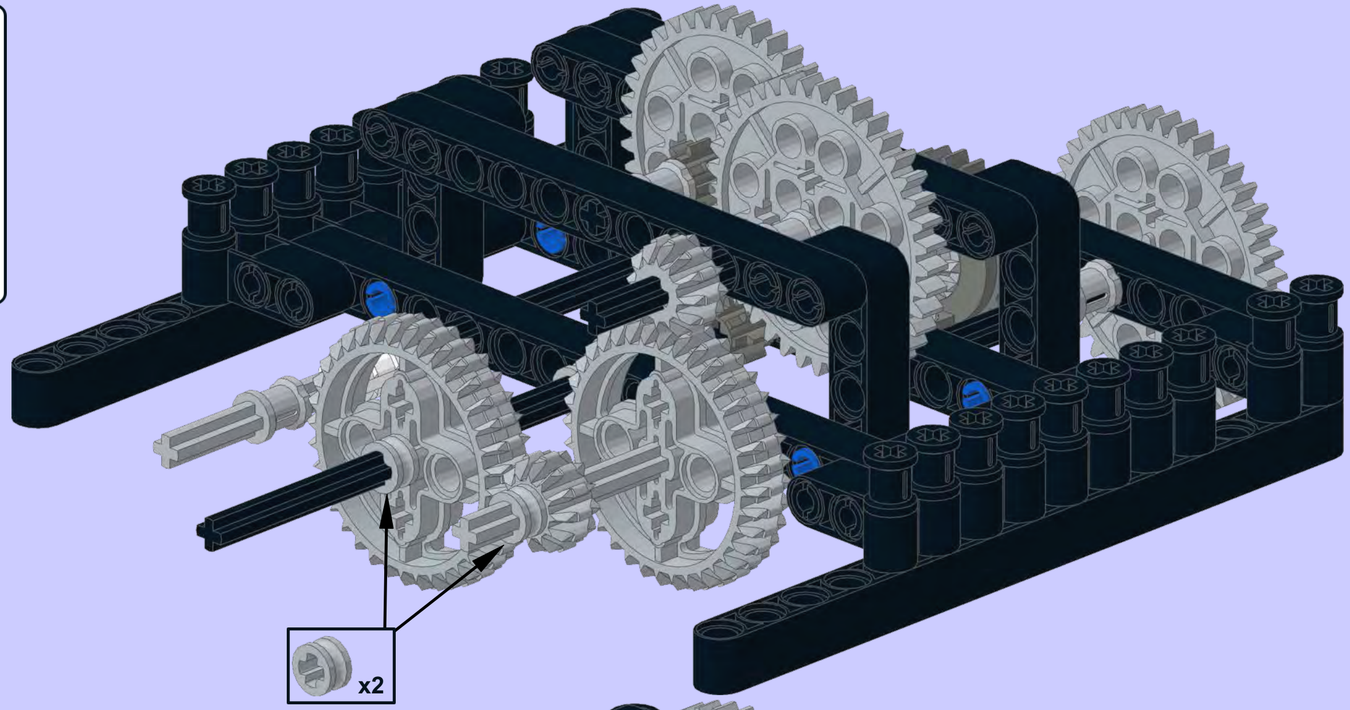


**18**

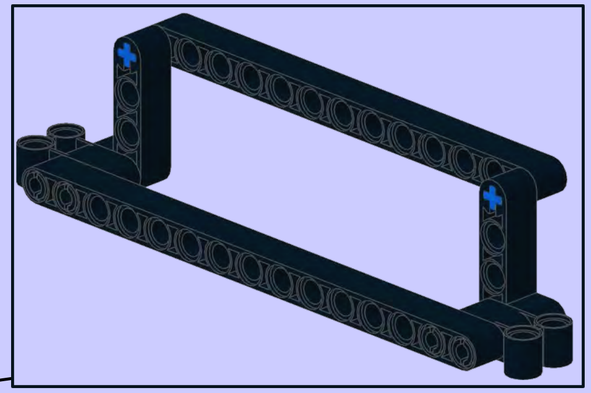

**19**

**1x**

24T

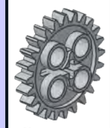

**2x**

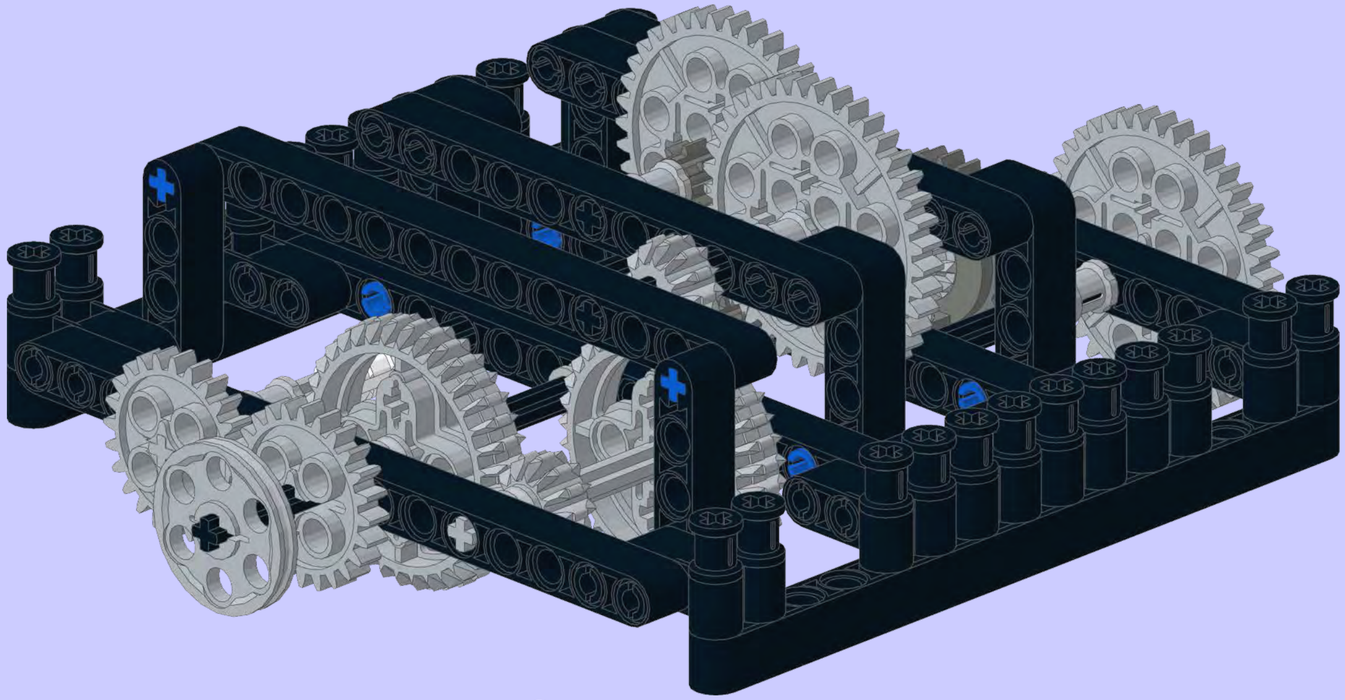

**20**

**8x**

**4x**

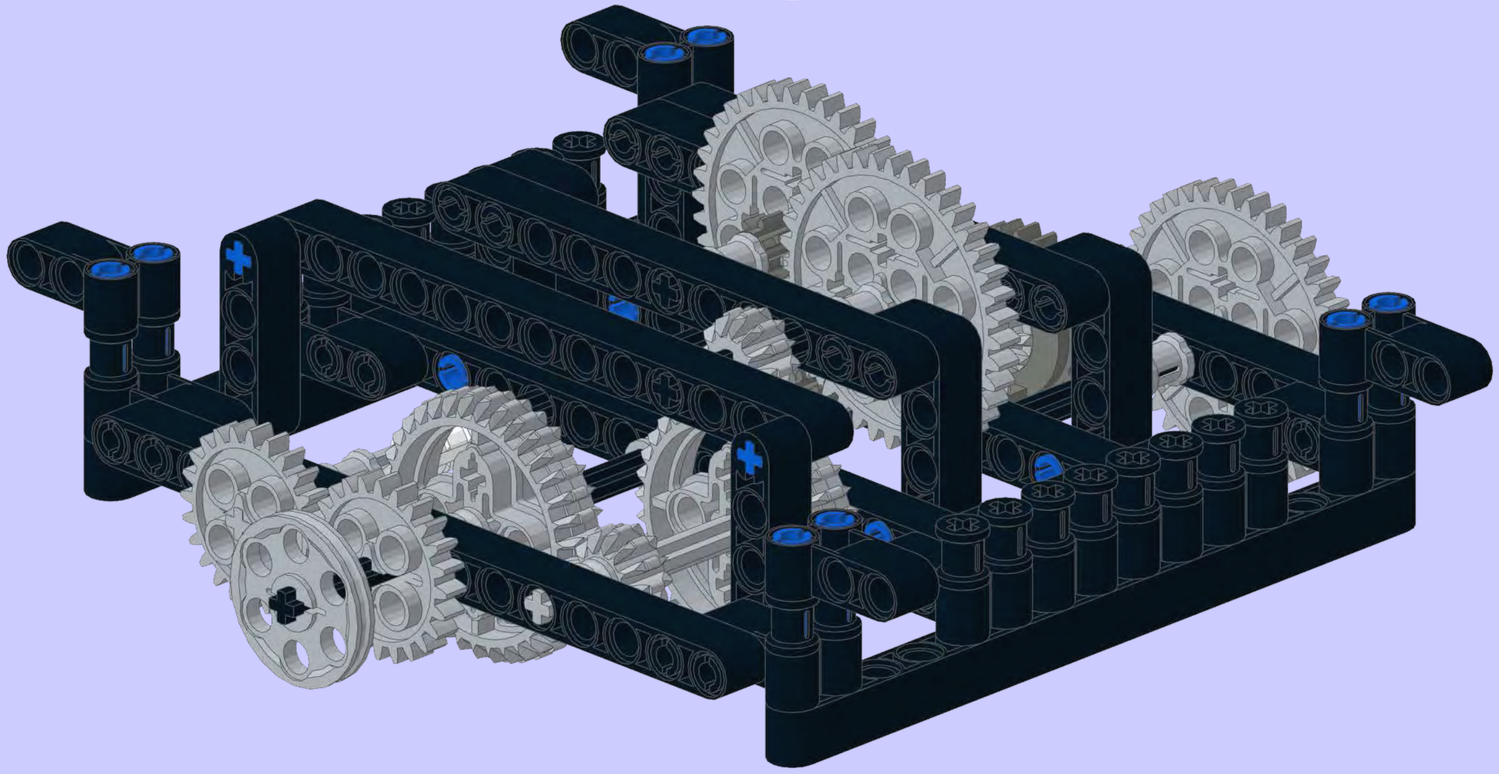

3

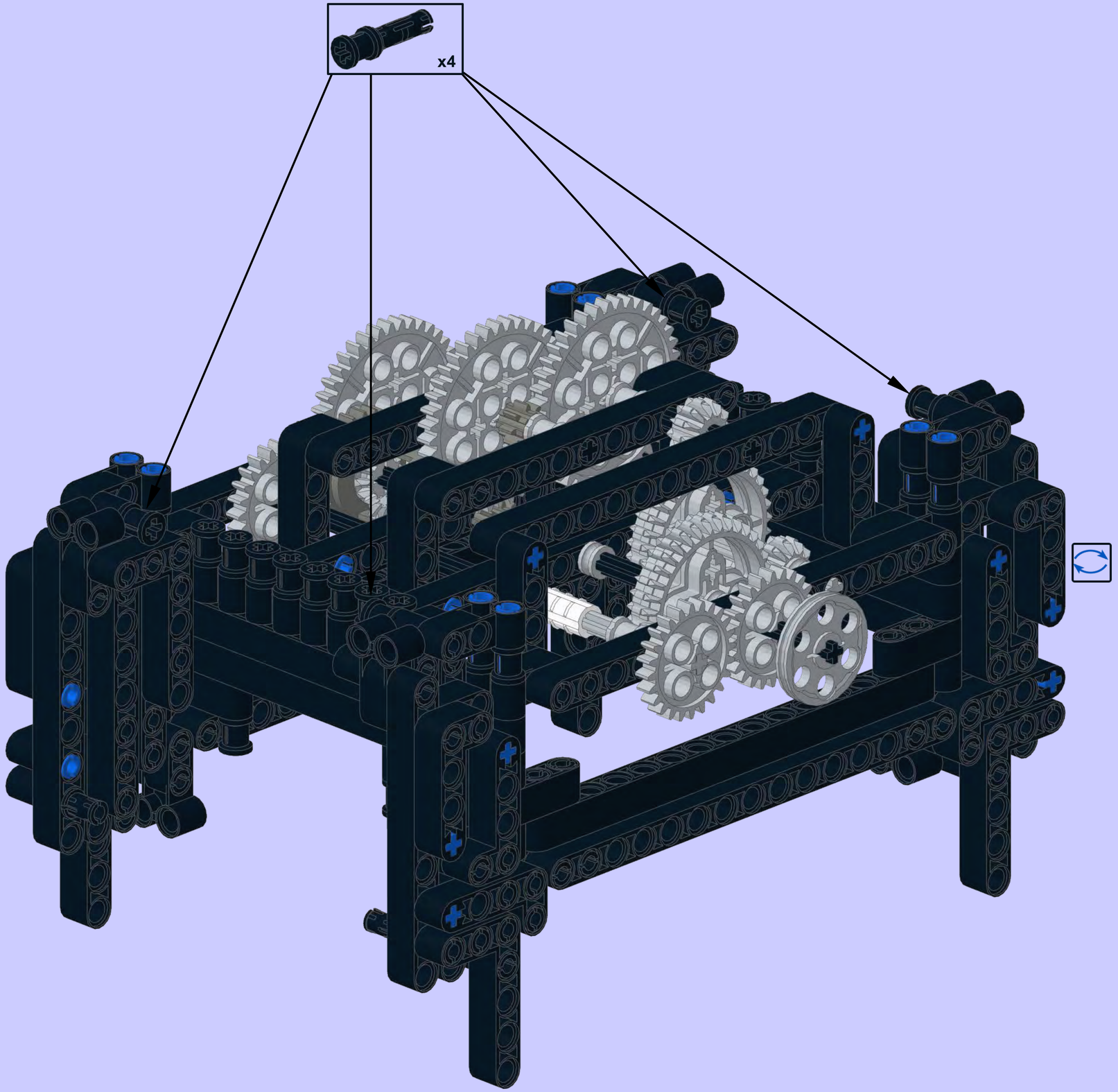

4

6x

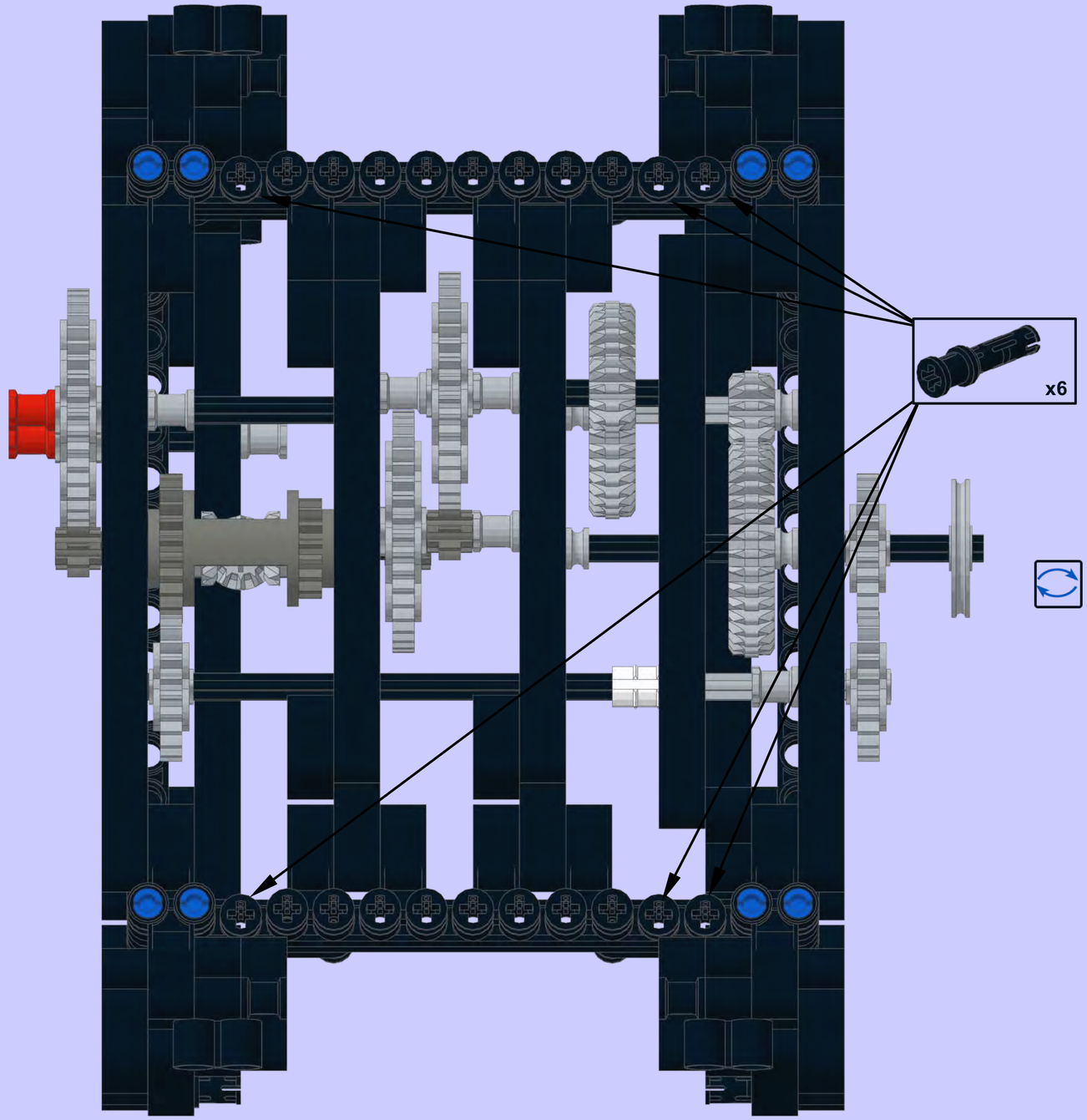

5

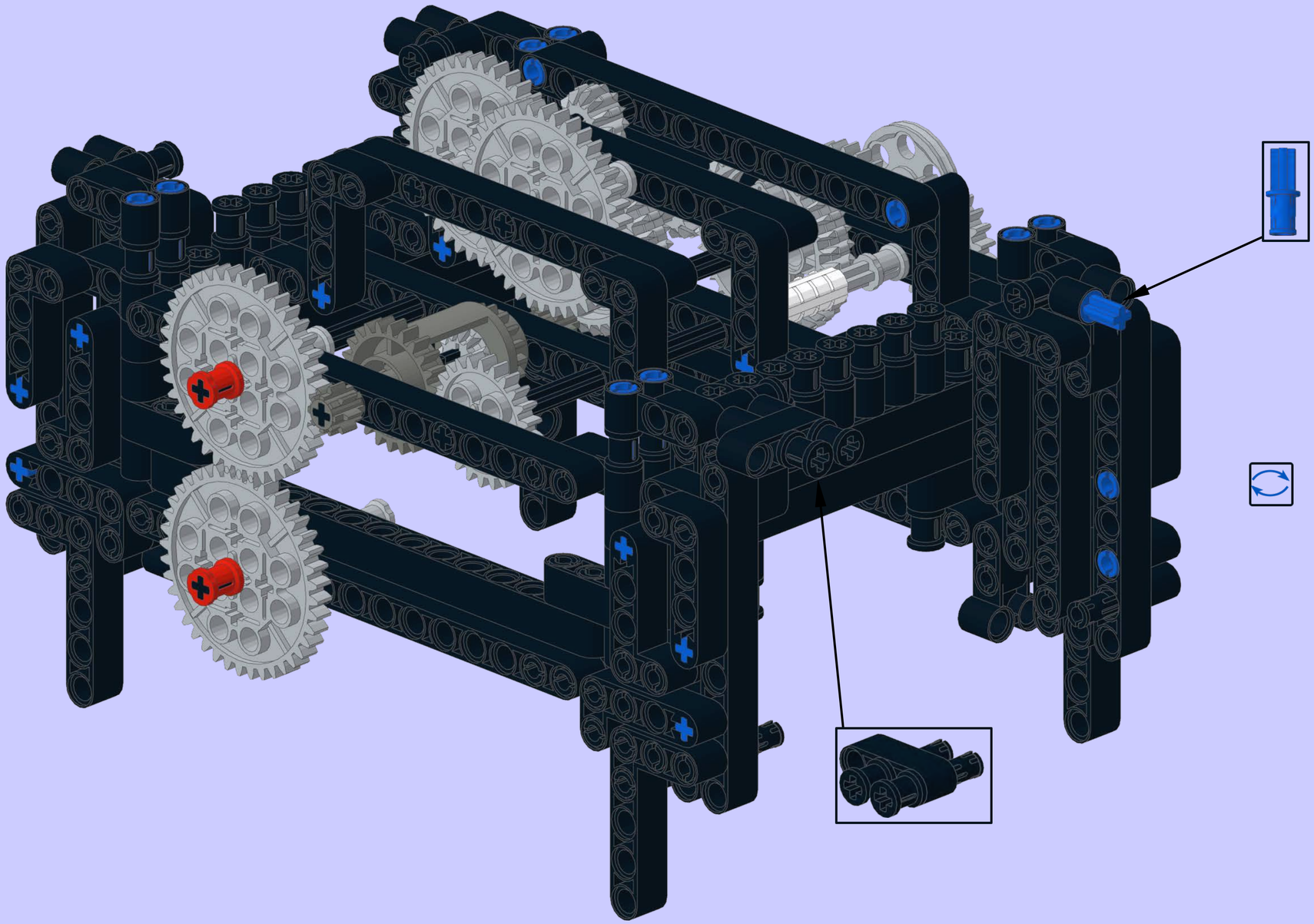

6

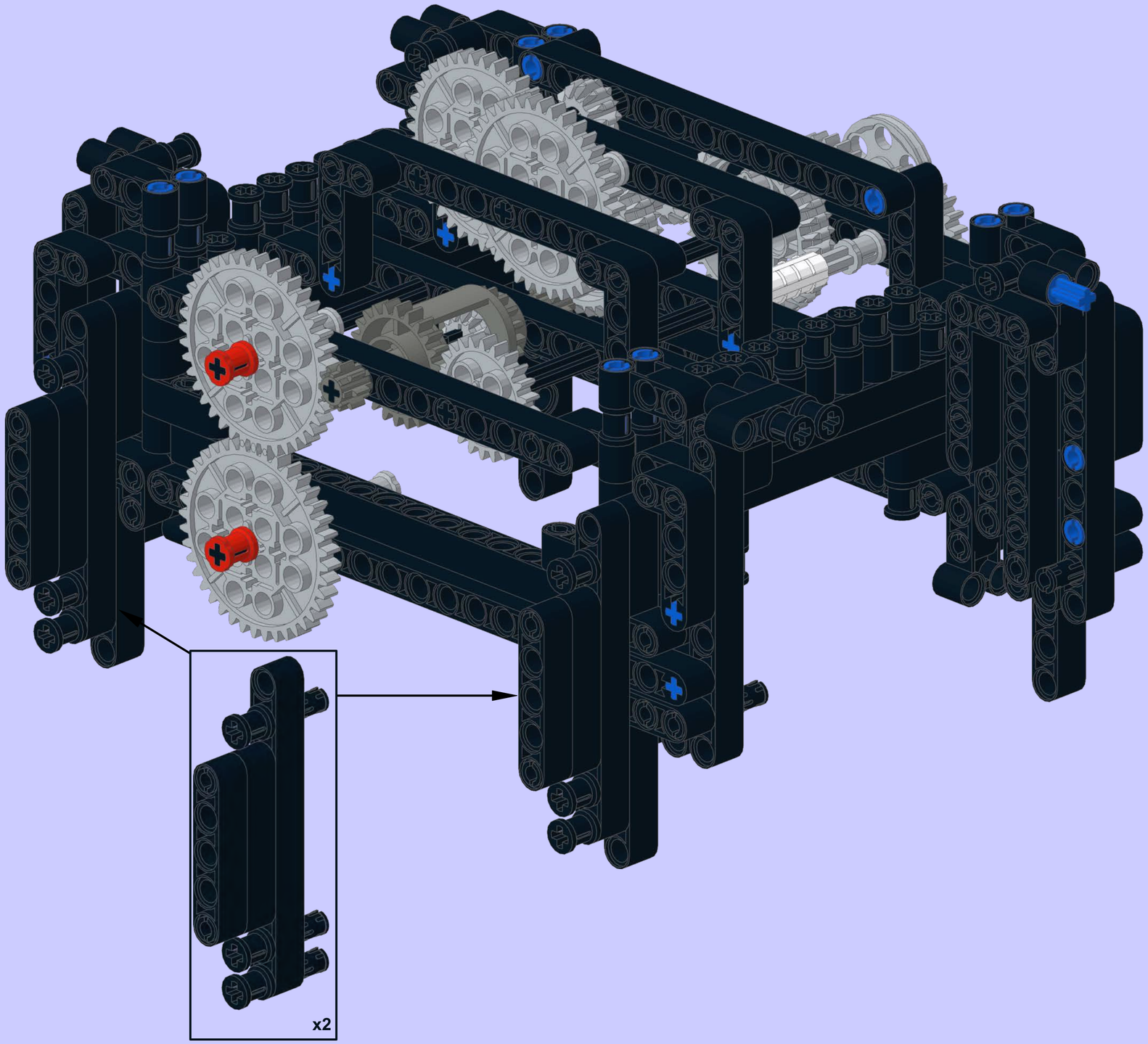

7

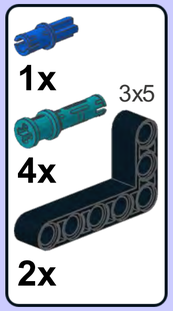


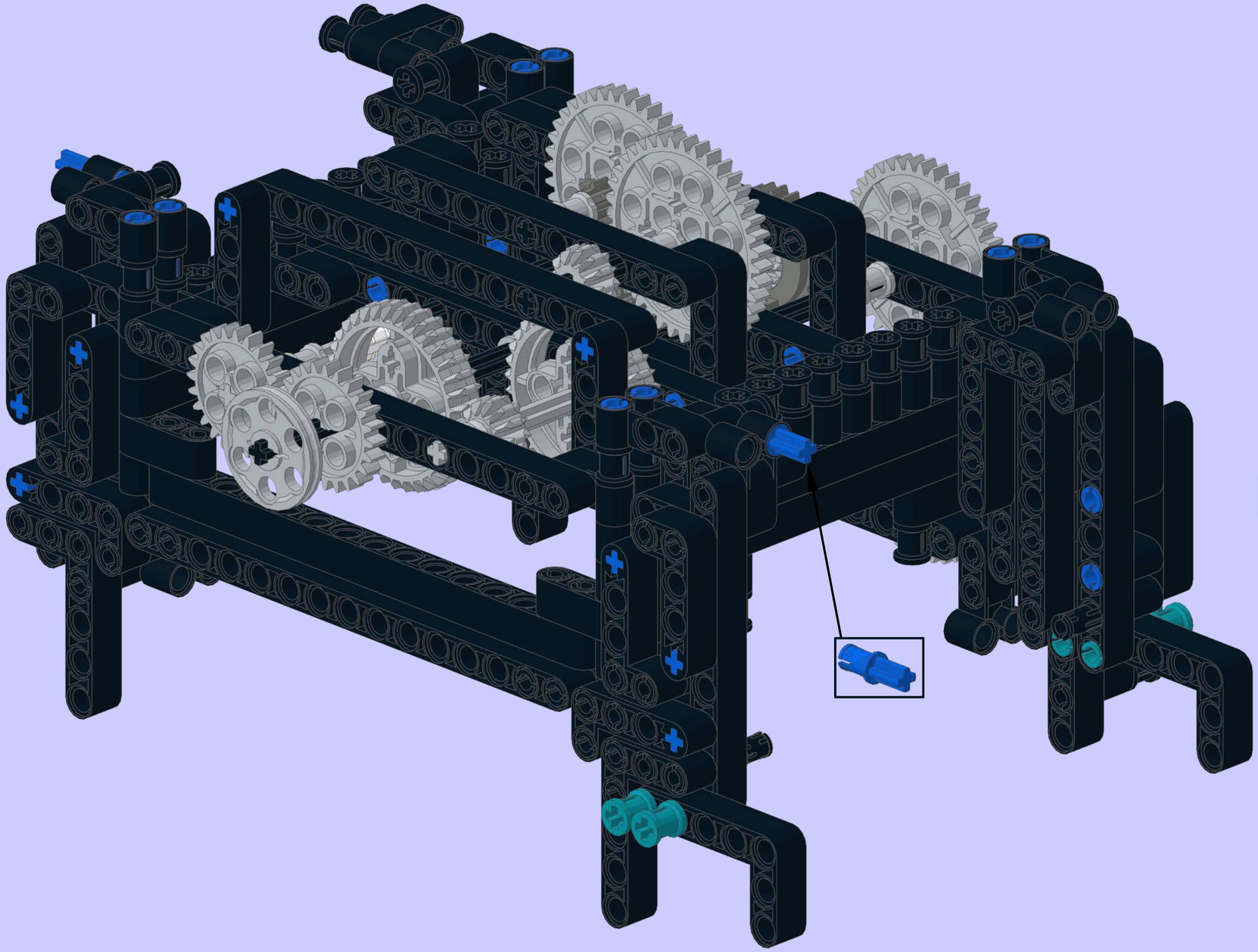

1

## "Stack" - Left Back

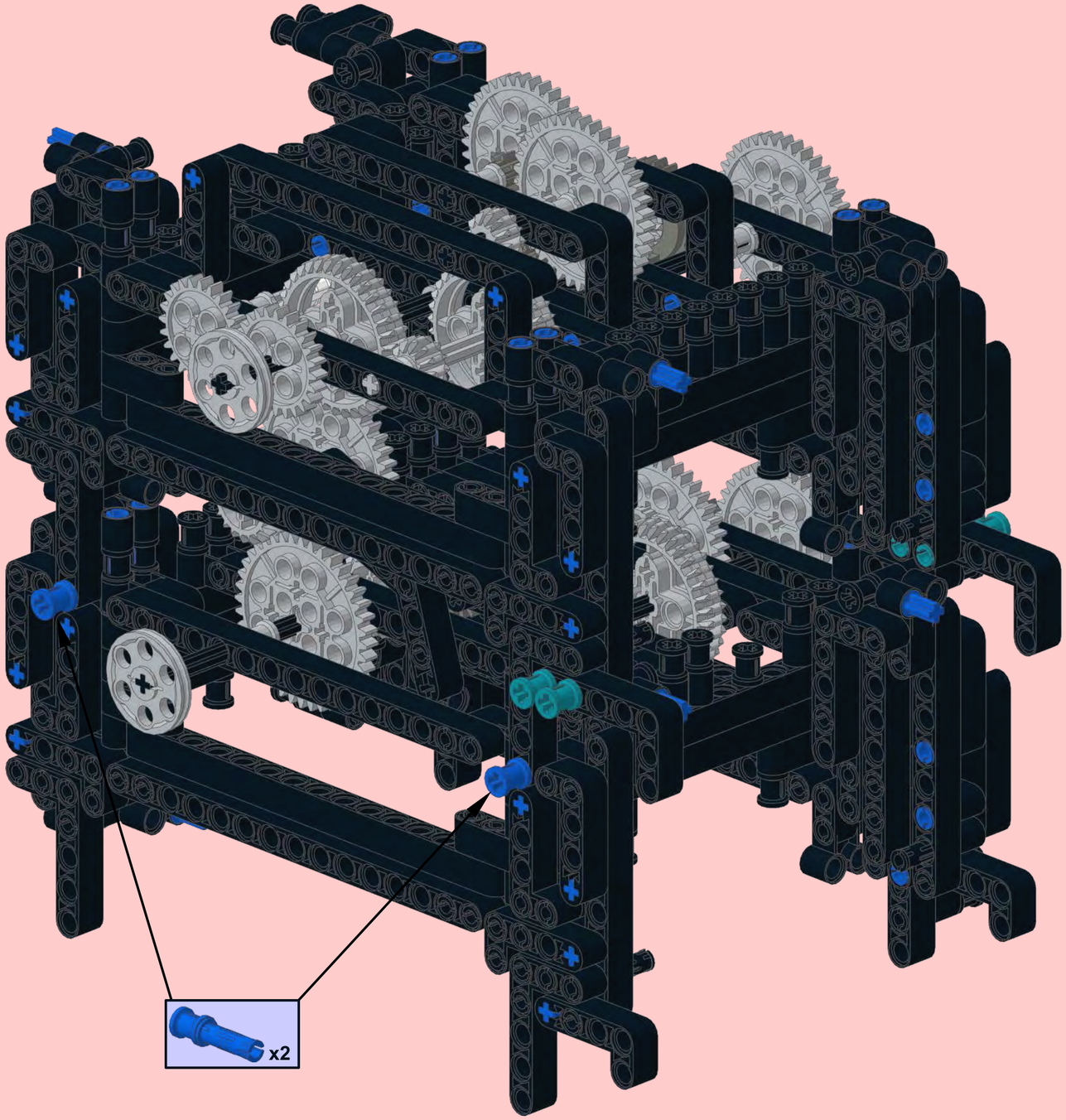

2

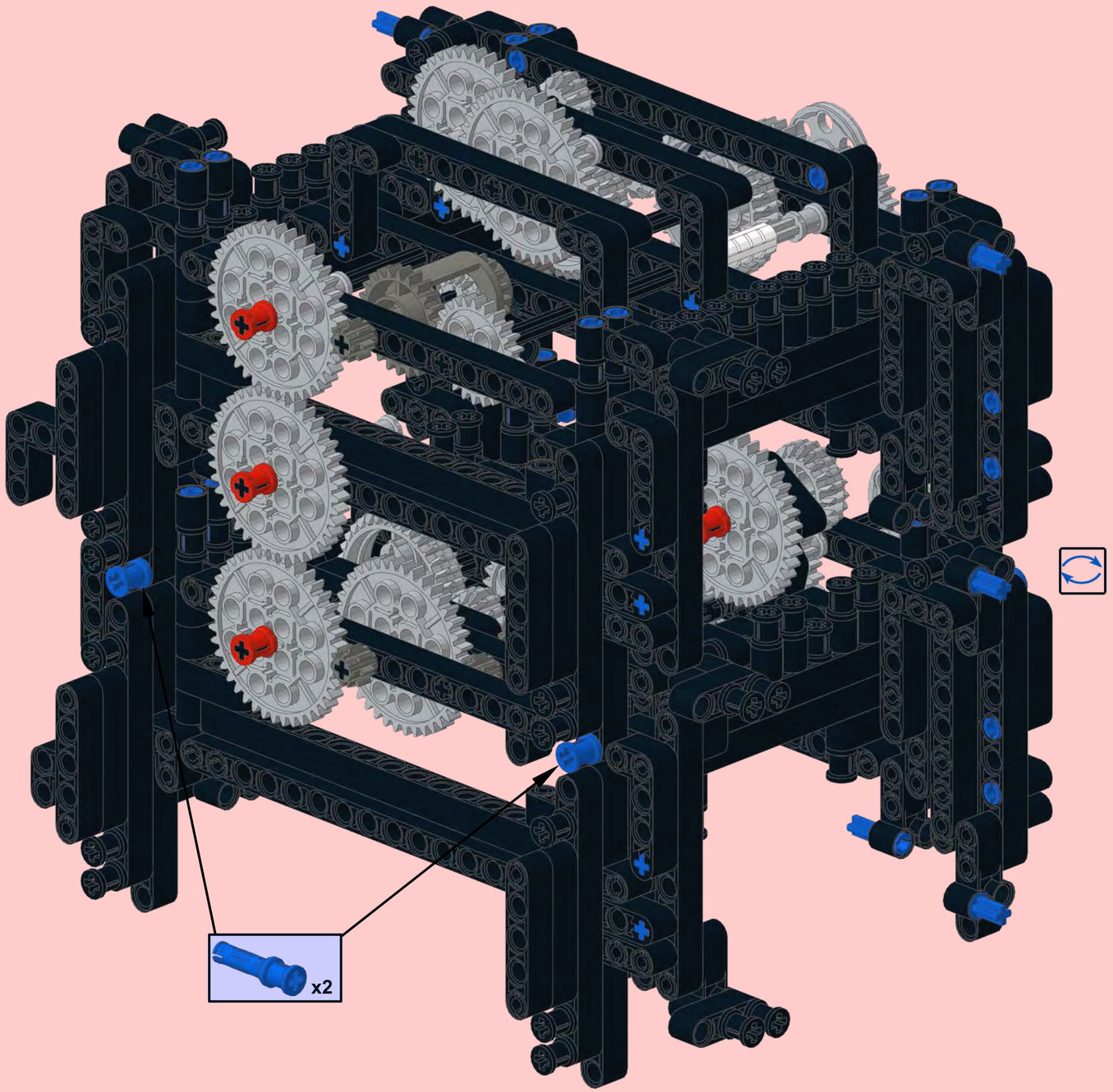

## Centre Back (CB) spacer

**1**

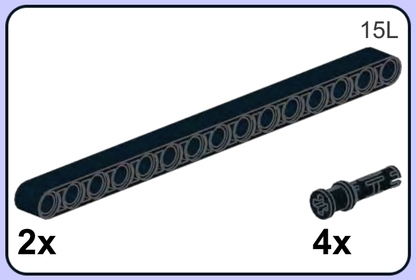

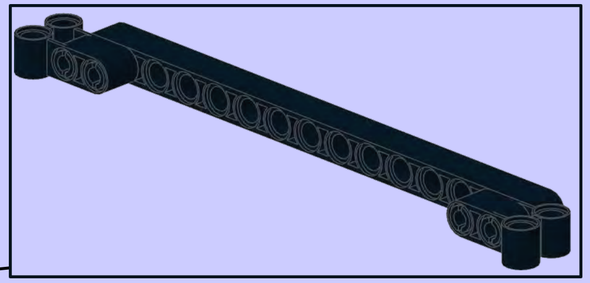

**2**

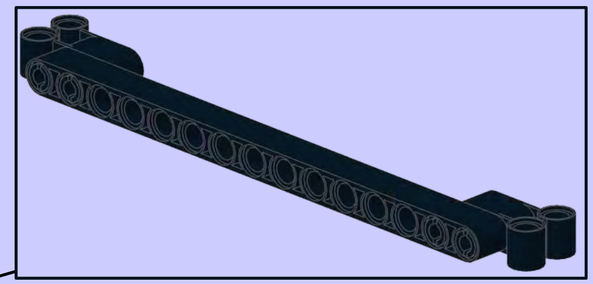

3

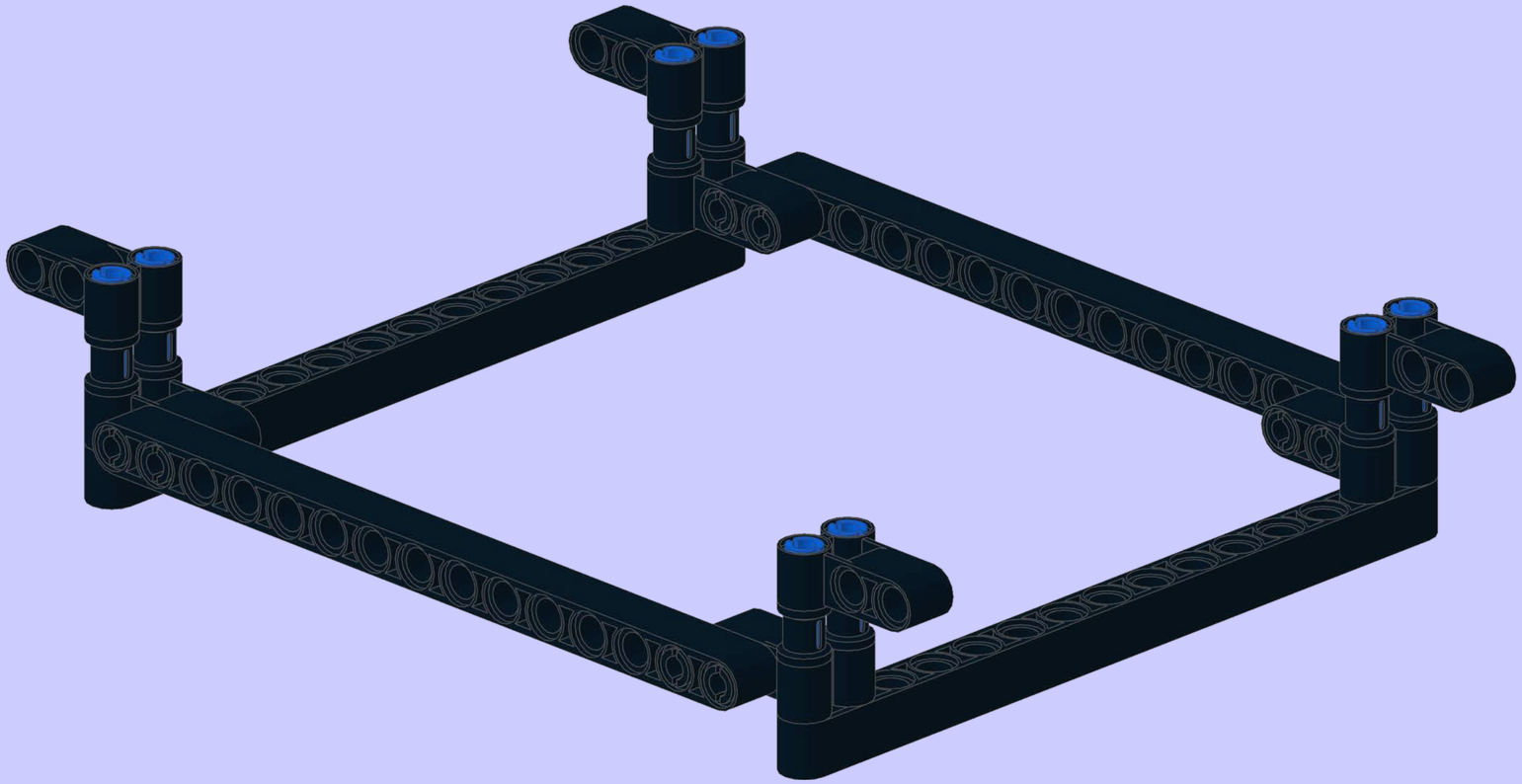

1

## Centre Back (CB) Rack - using standard base

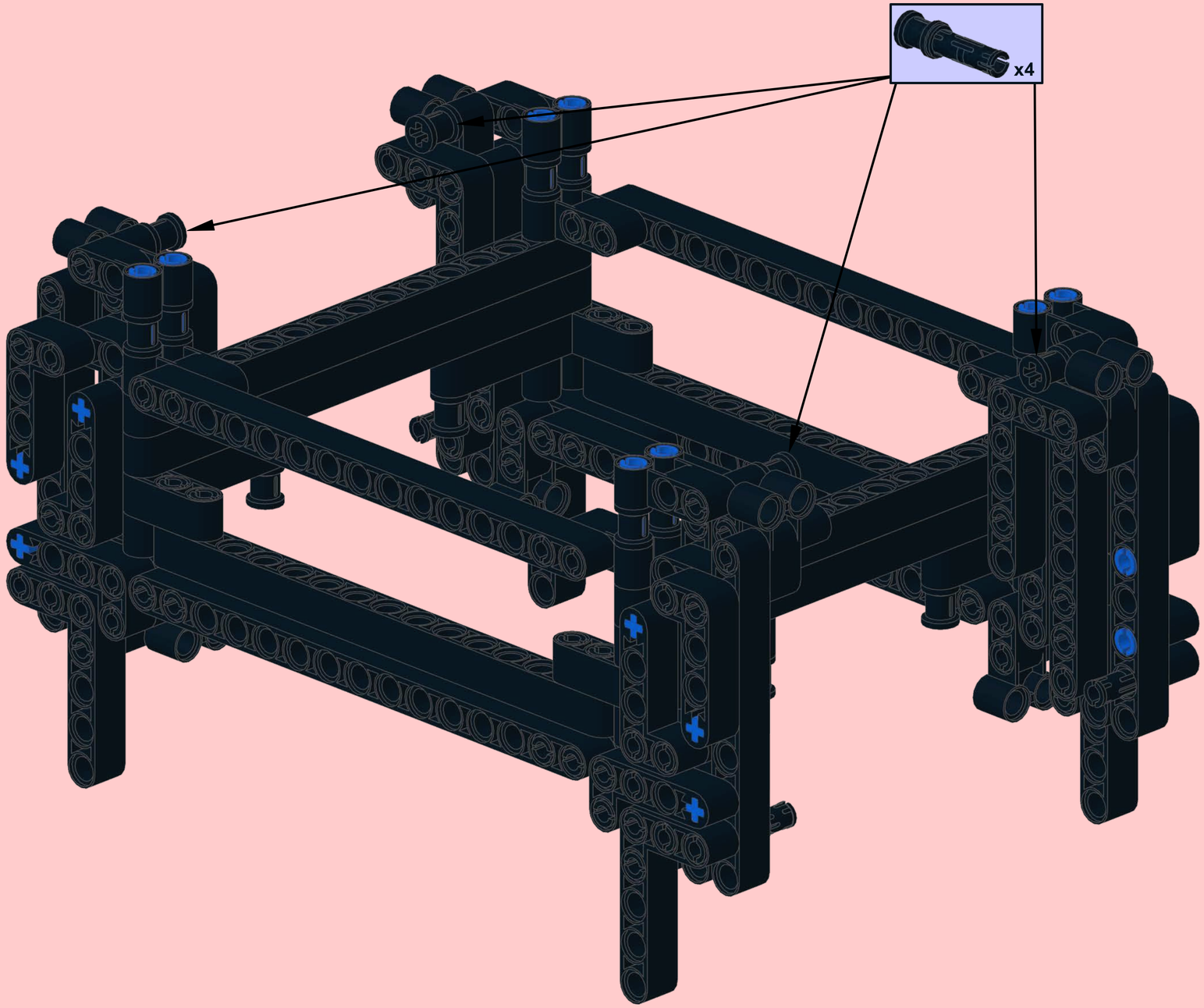

2

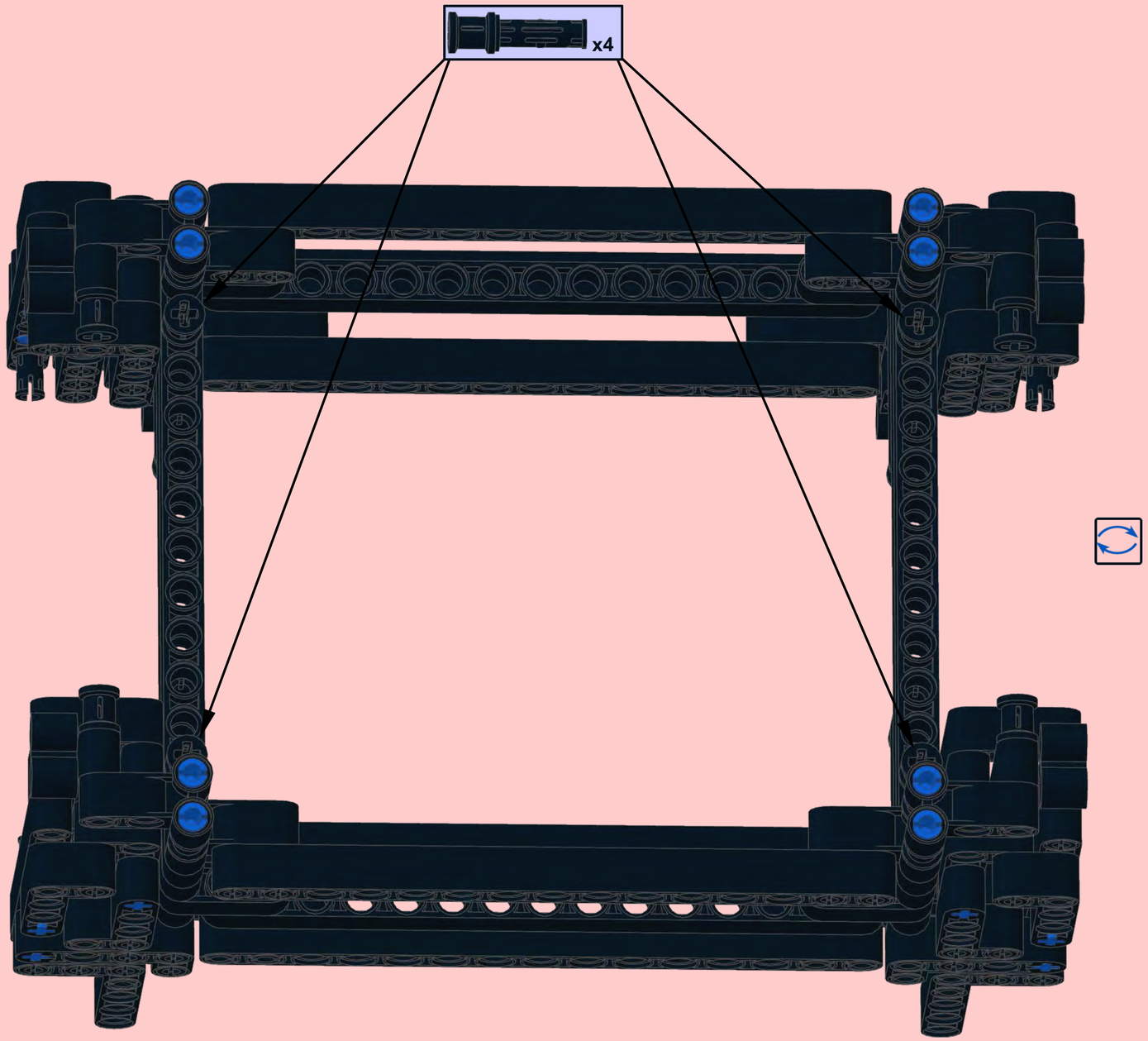

3


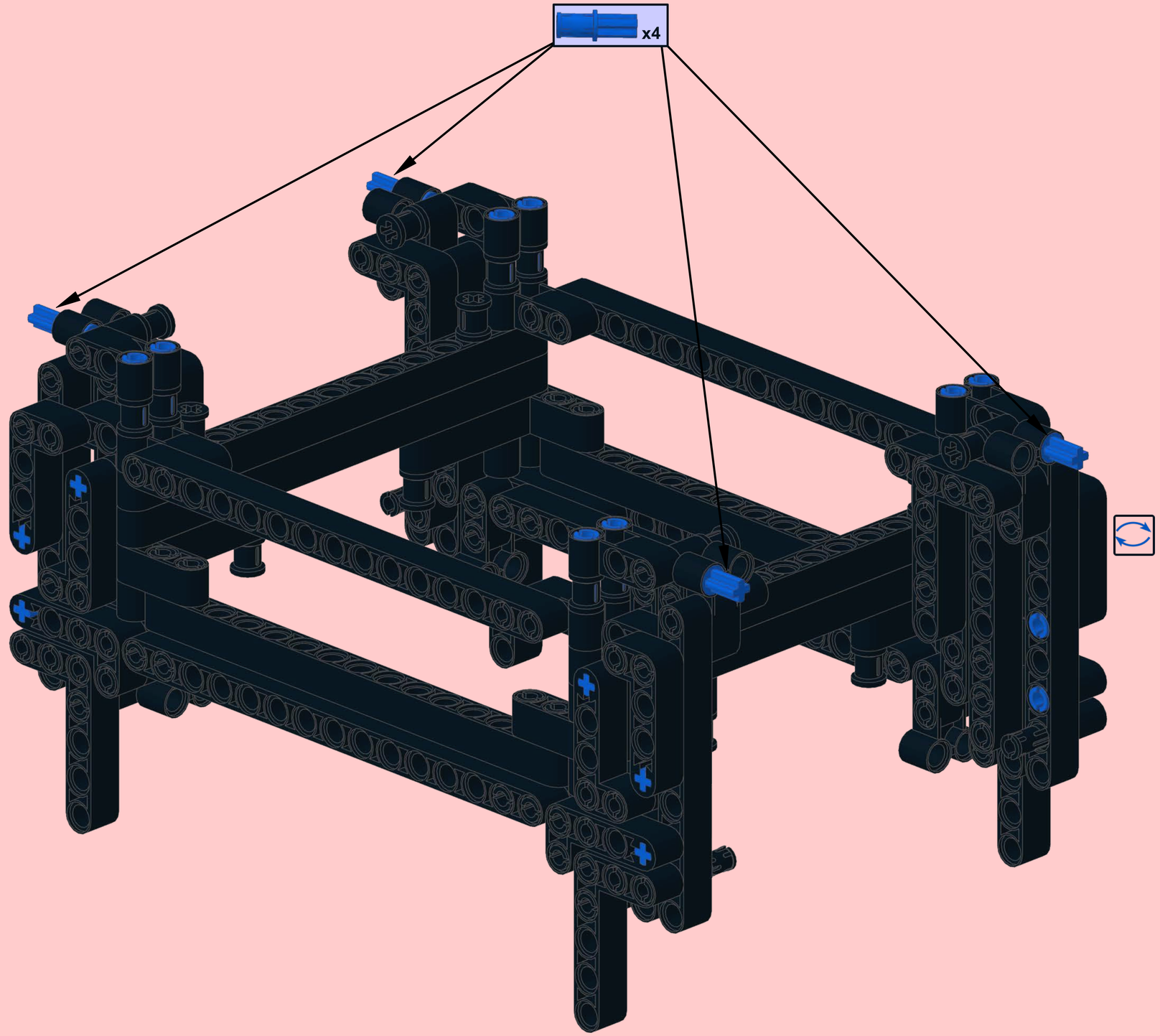

1

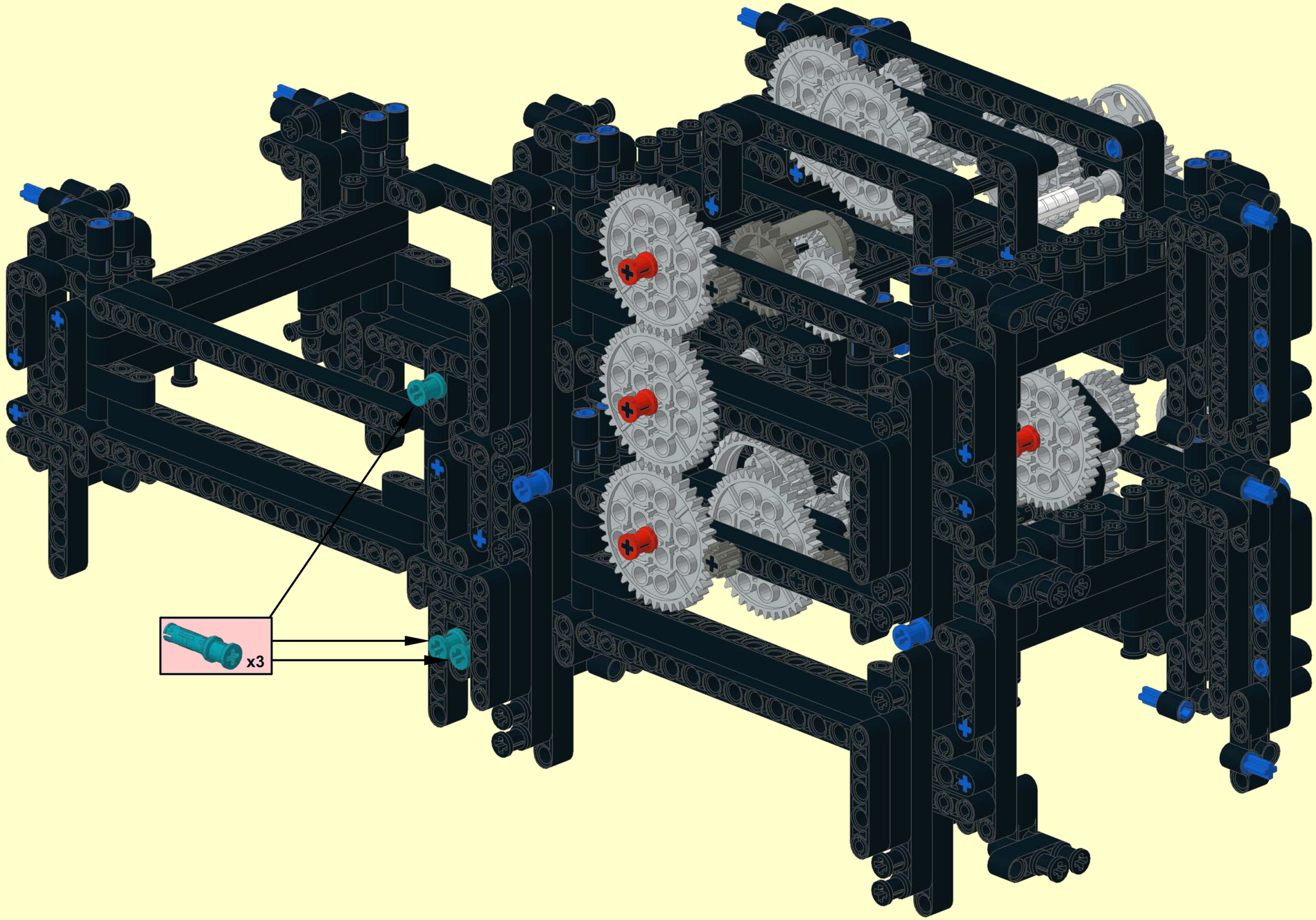

2

3x

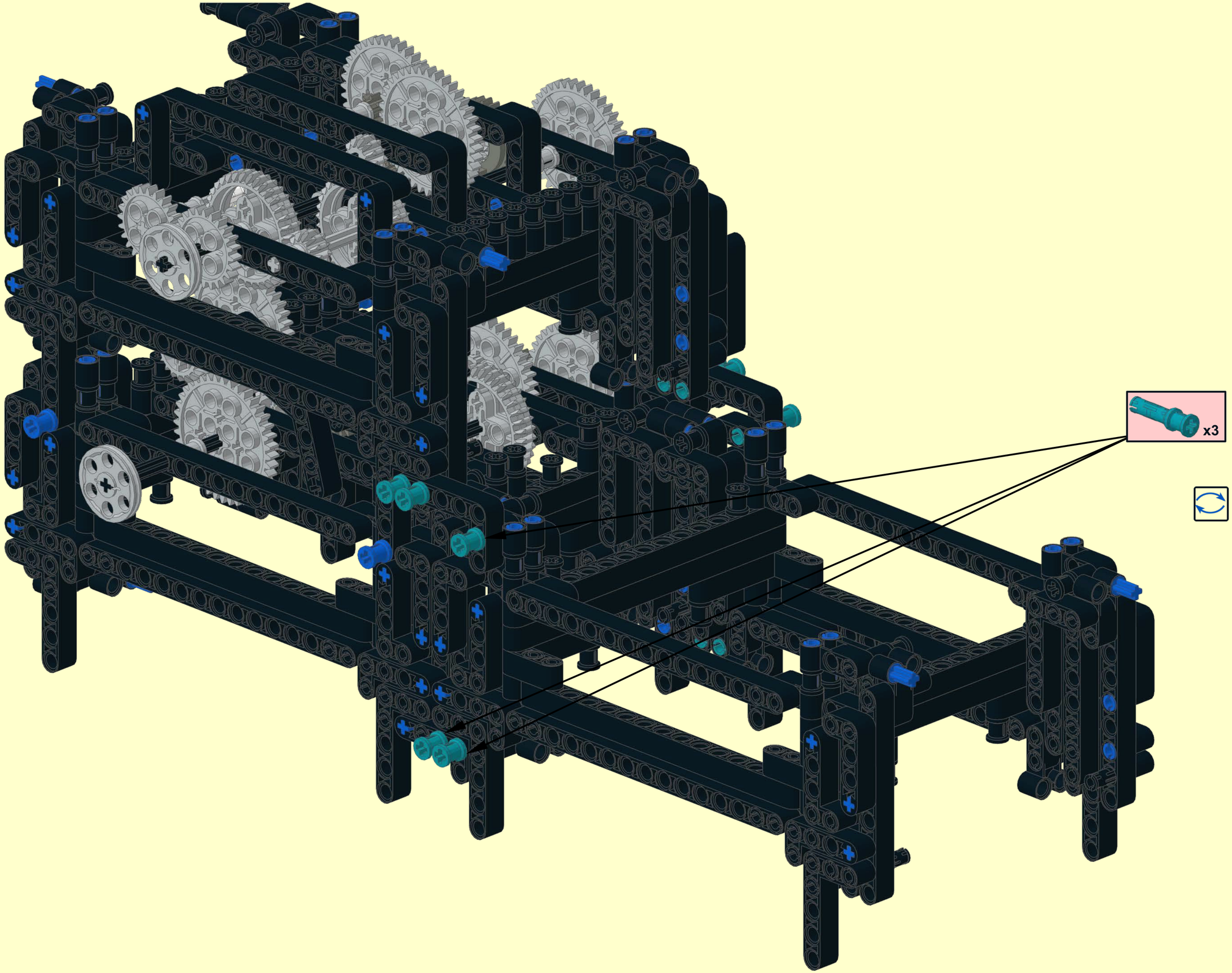

# Left - Right Stack Connectors - 4 required

1

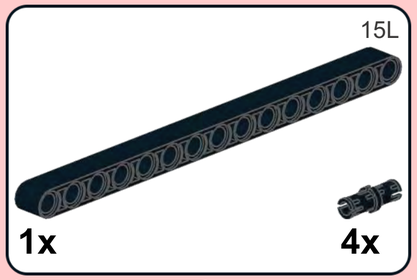

2

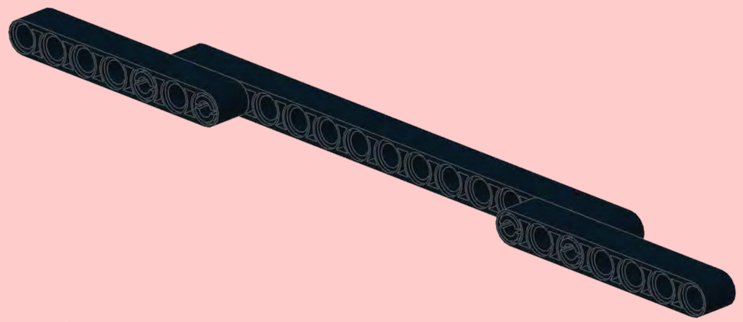

3

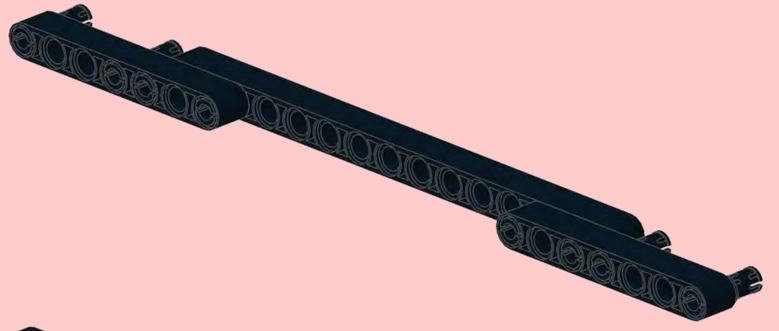

4

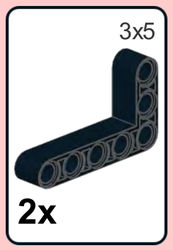


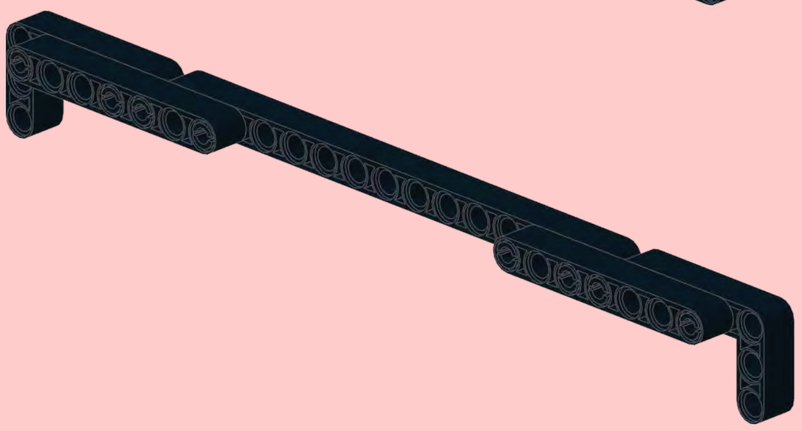

x4

3

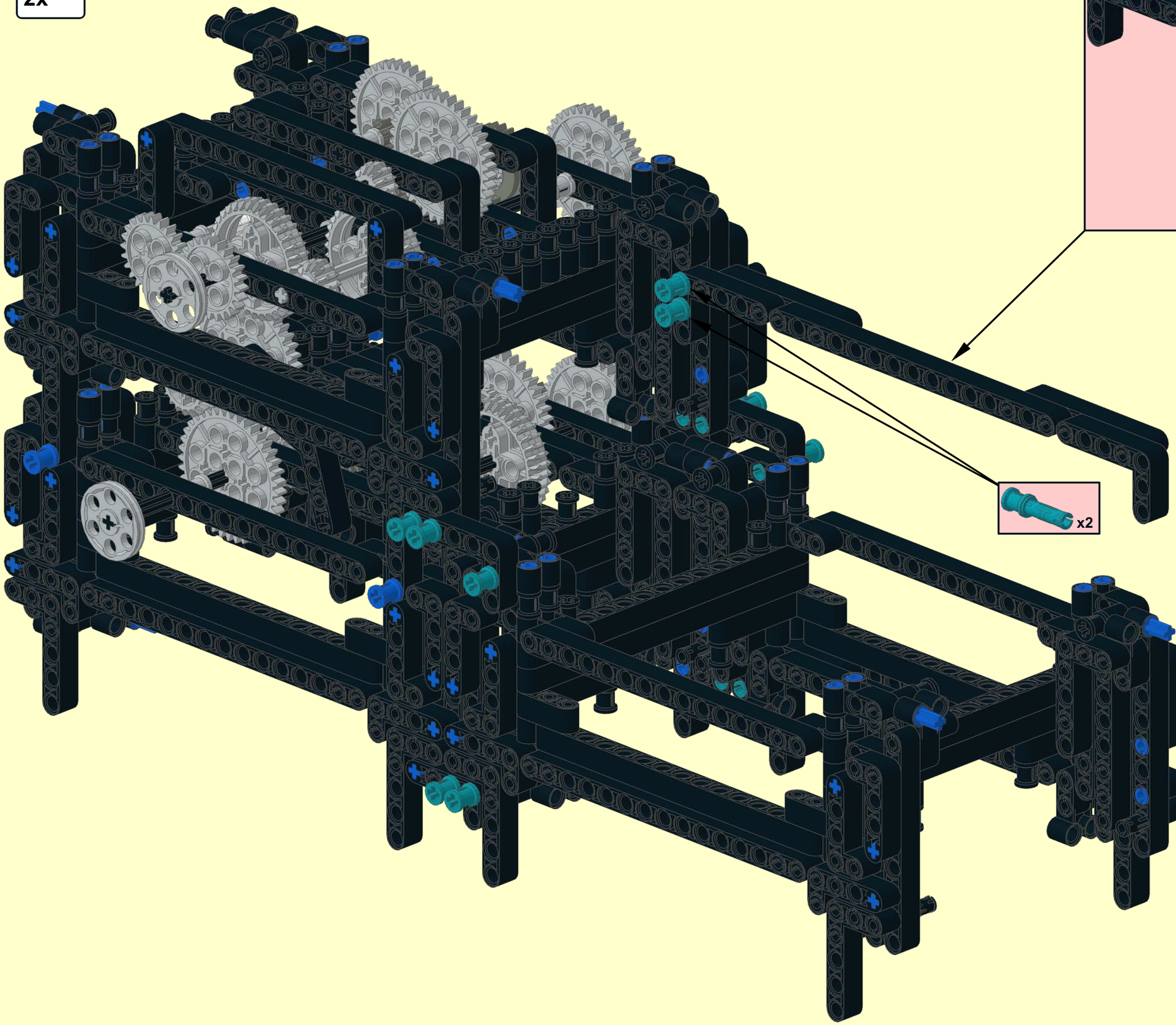

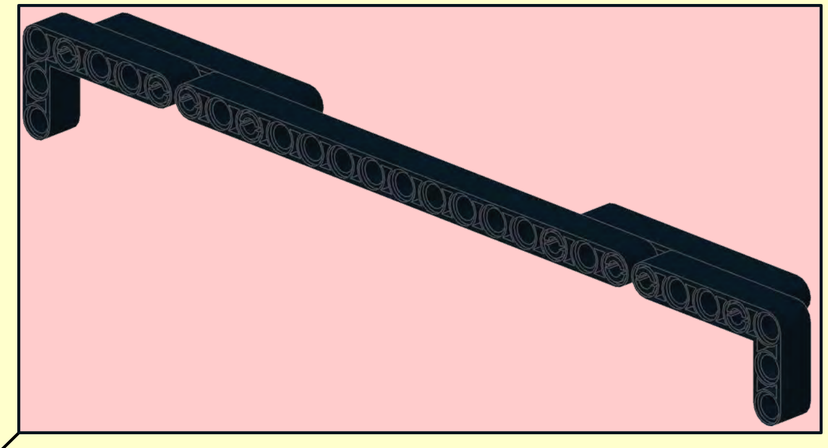

4

2x

x2

# Right Bottom Back (RBB) calculator - multiply by -127, divide by 25

**1**

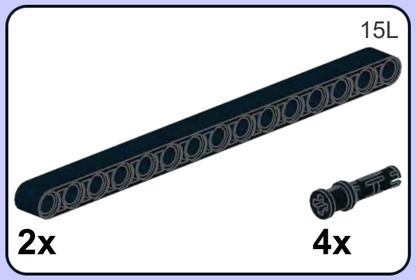


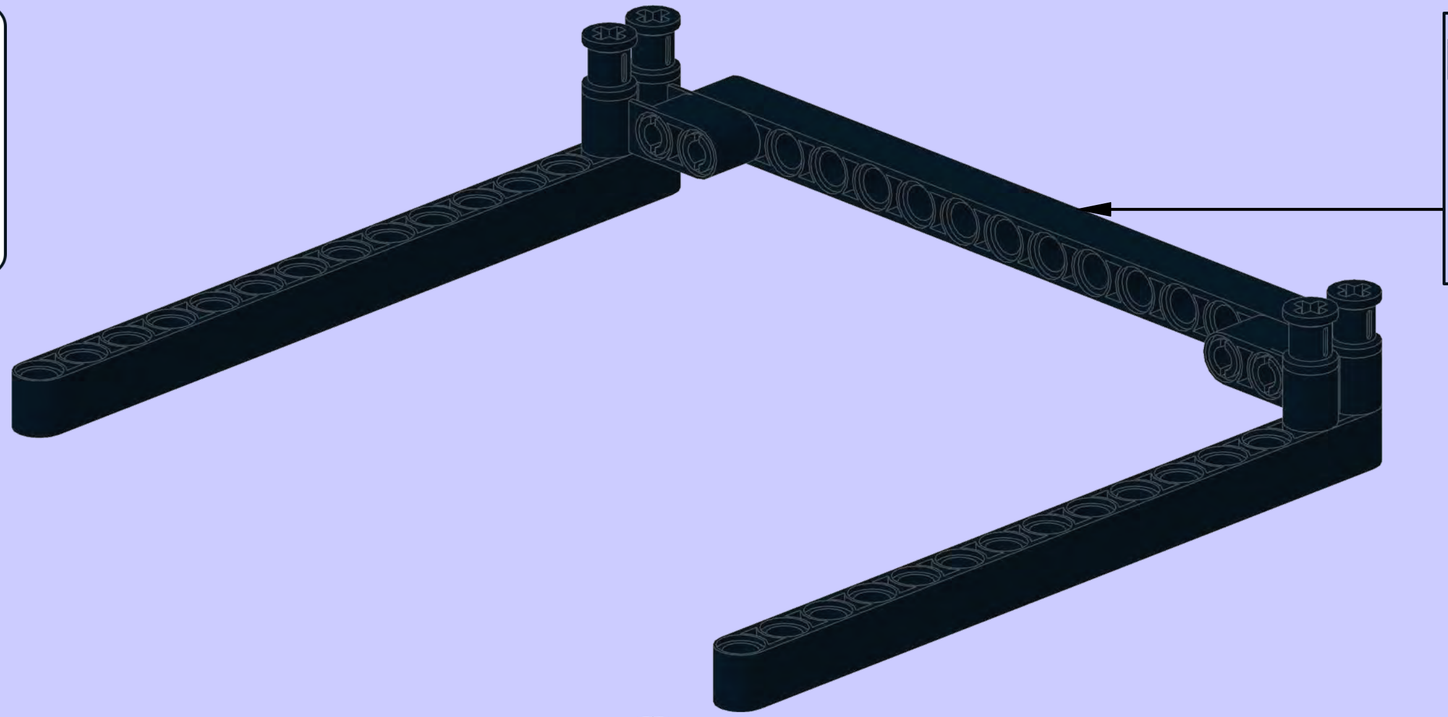

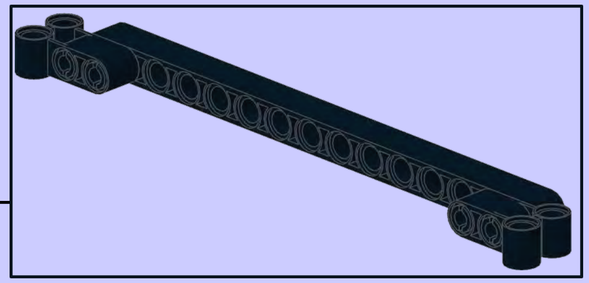

**2**

3

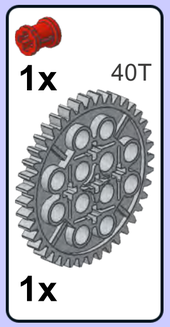

4

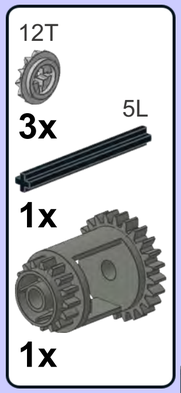


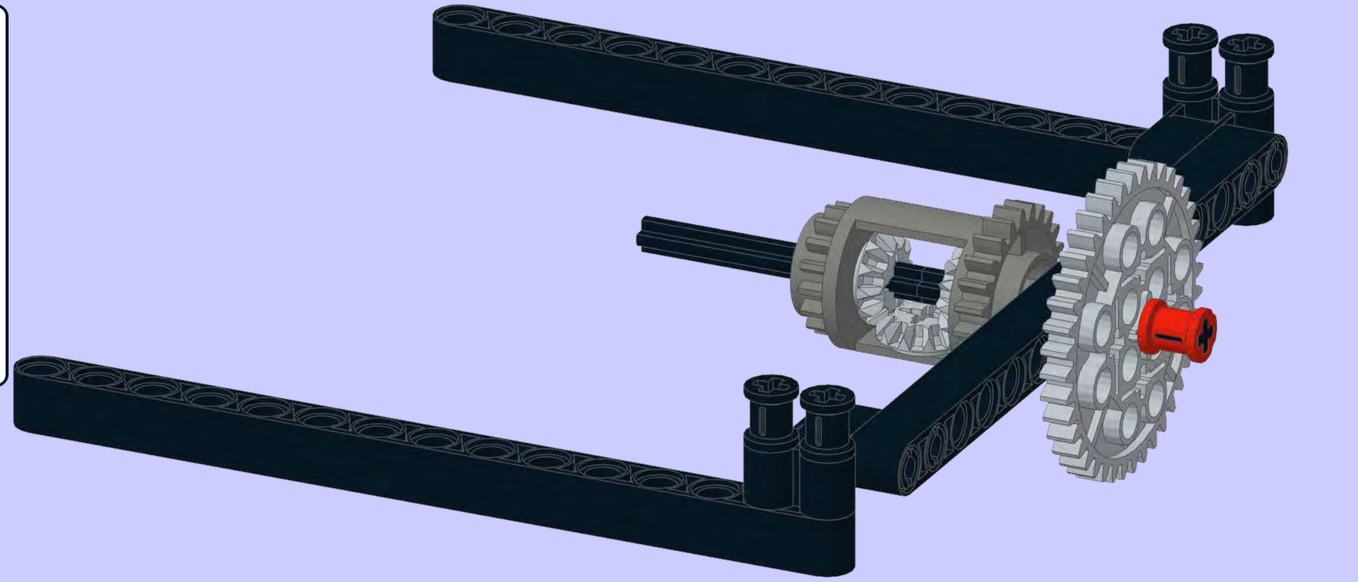

**5**

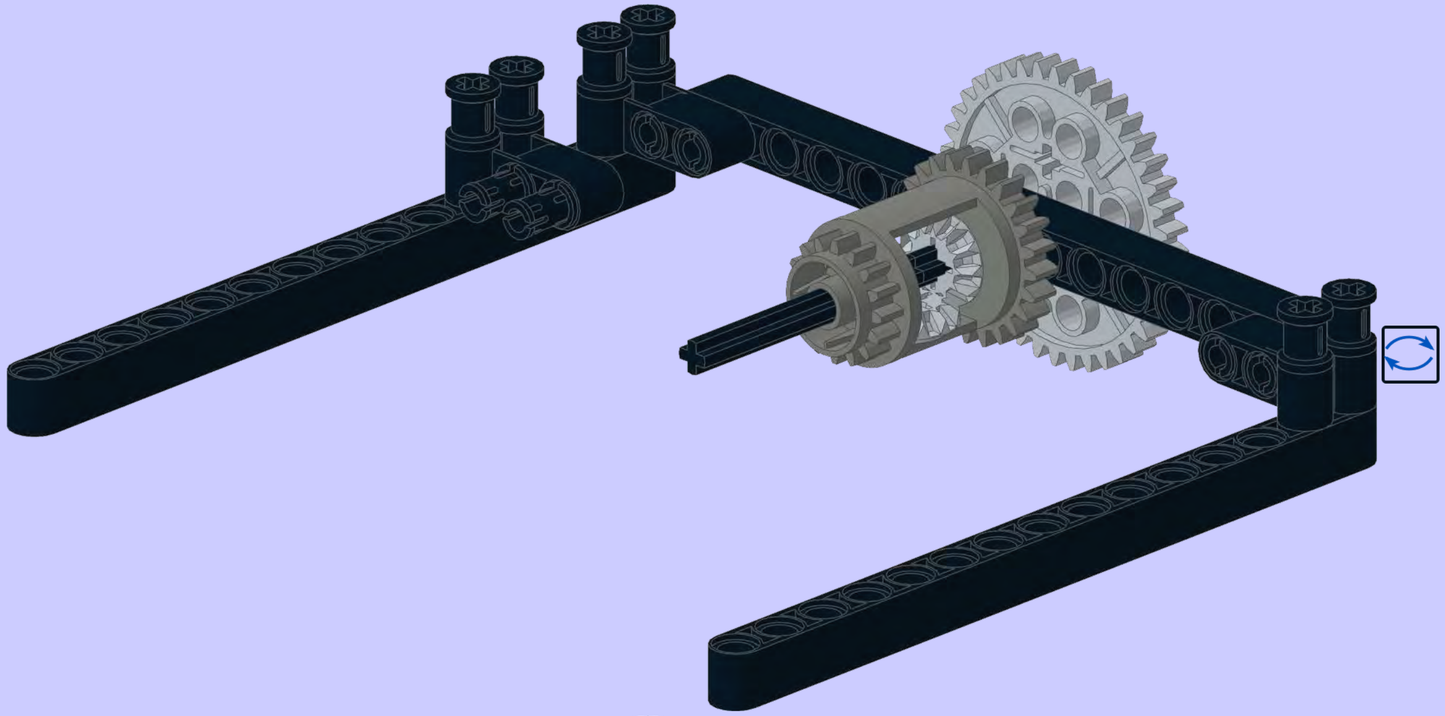

**6**

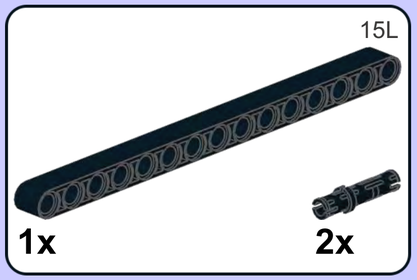


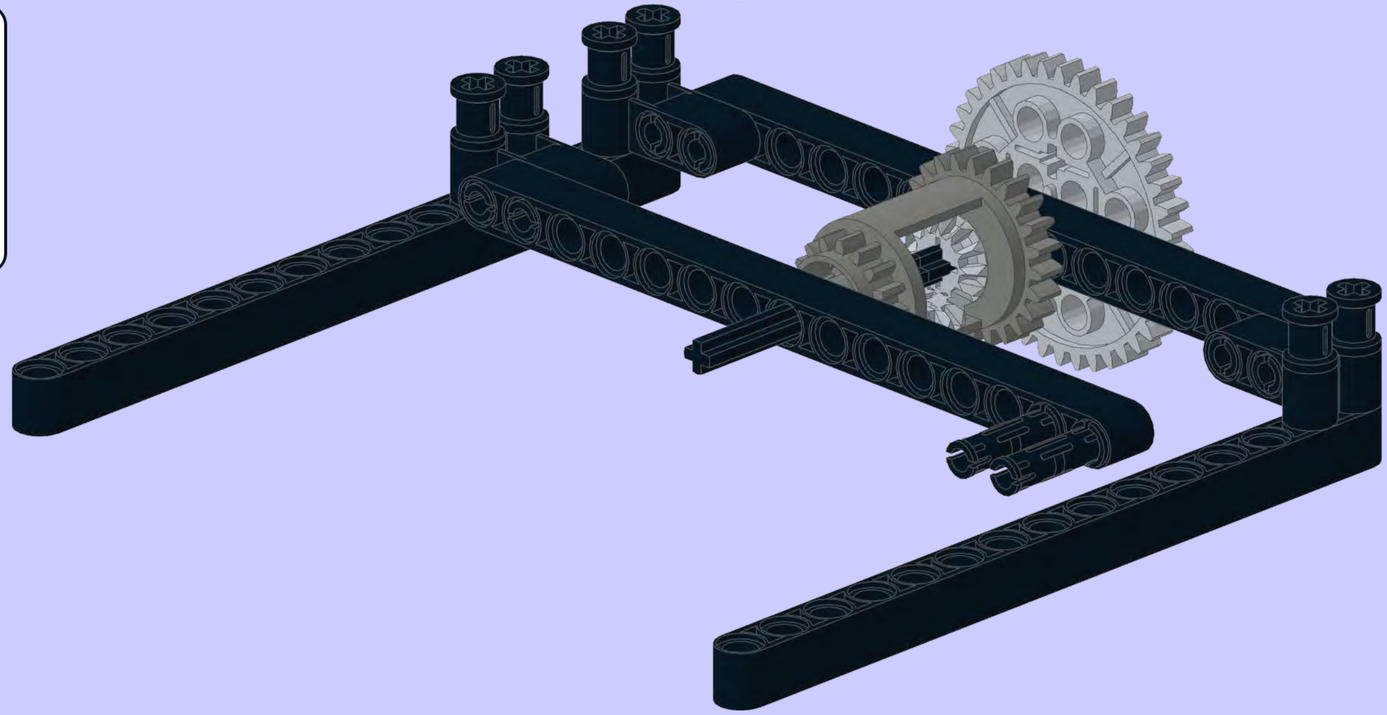

7

1x

2x

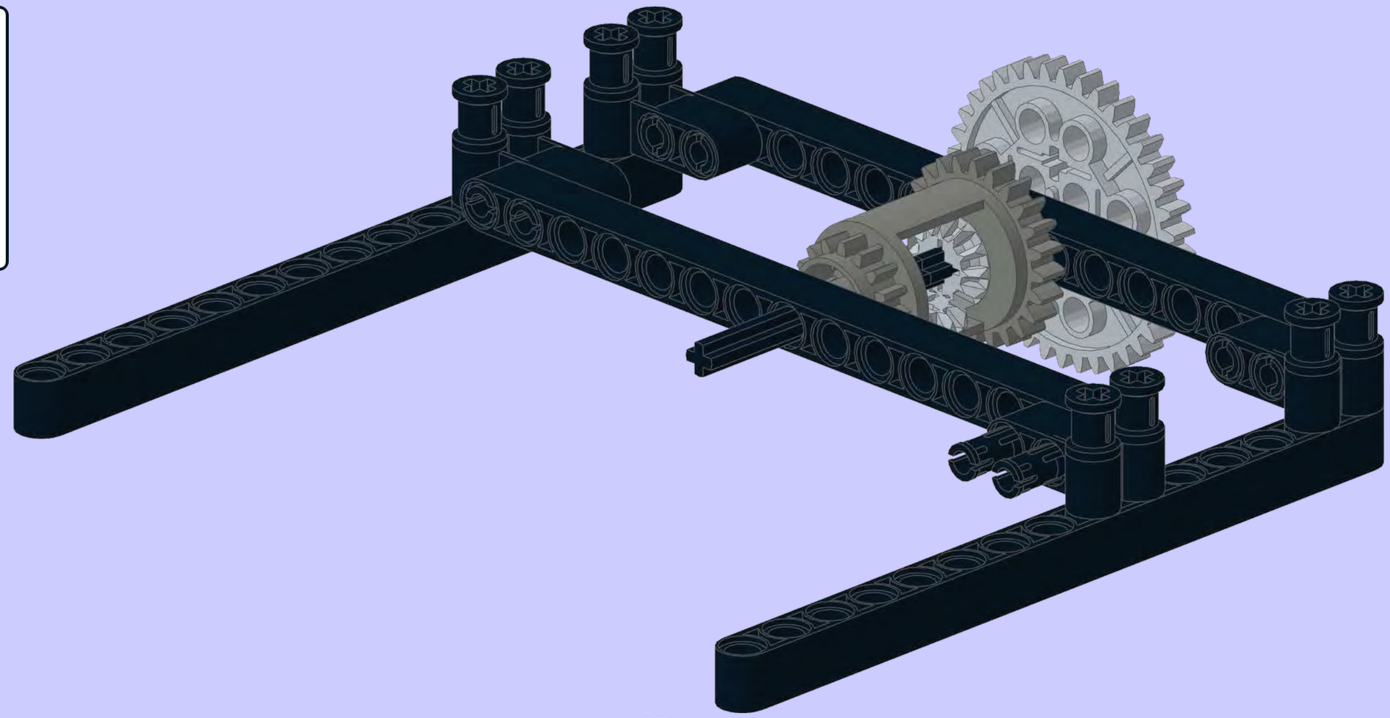

8

1x

16T

1x

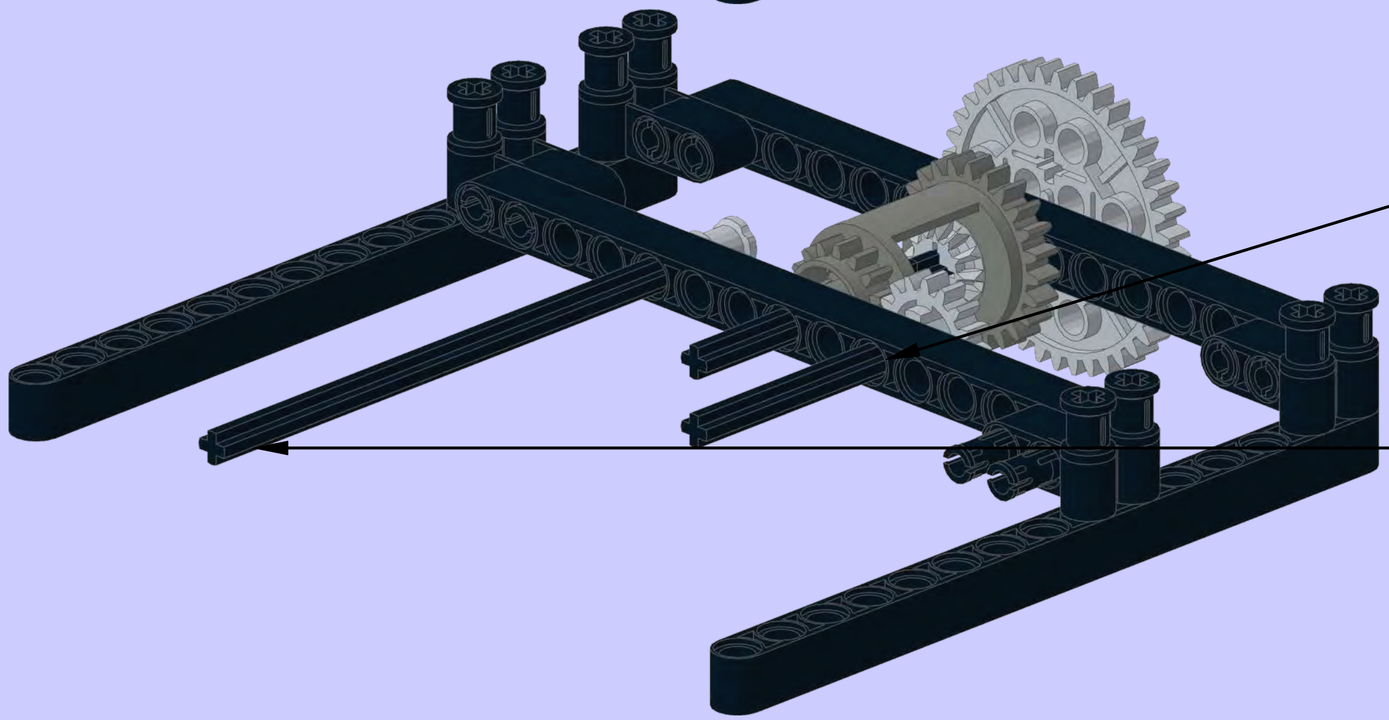

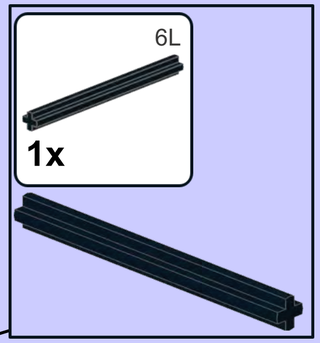


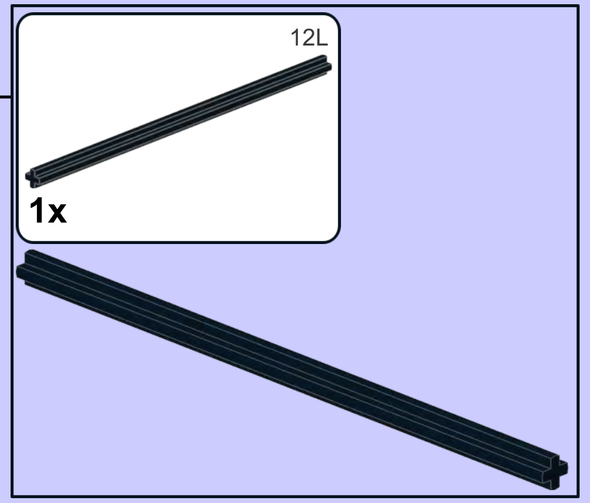

**9**

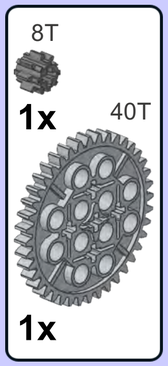


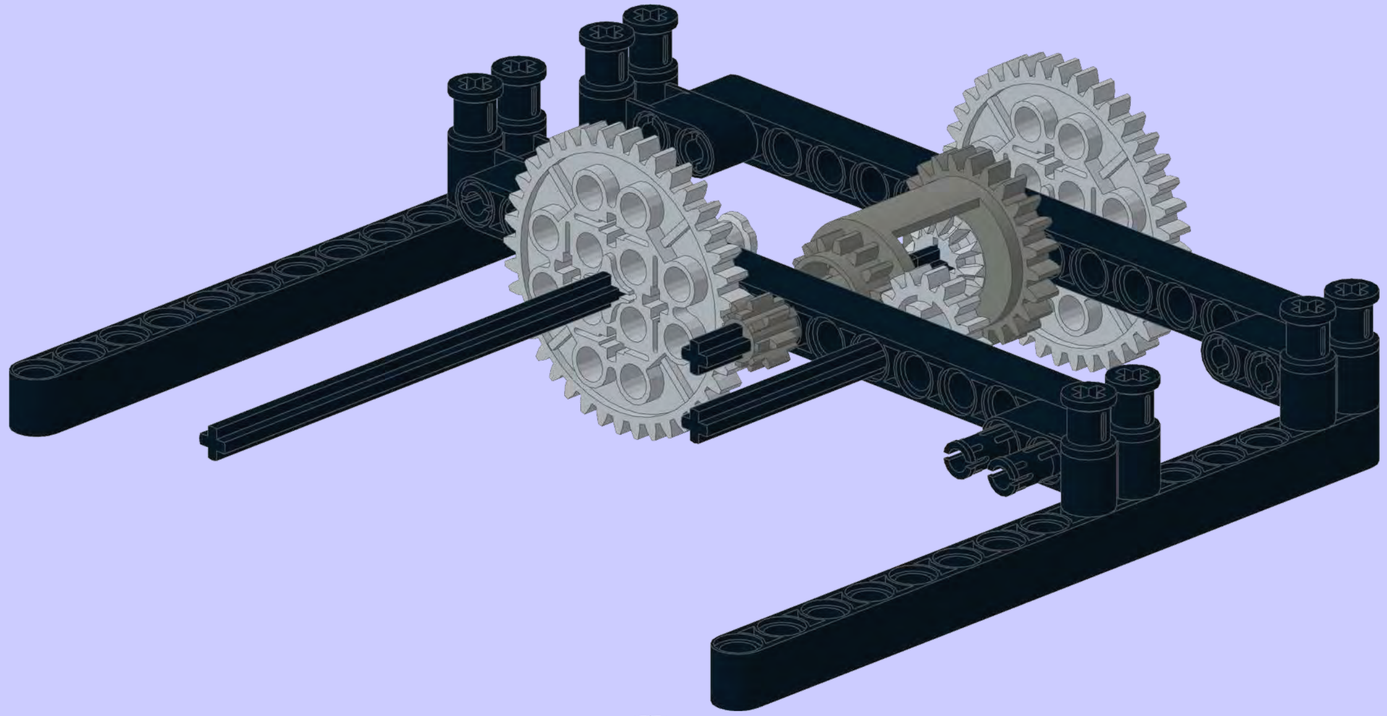

**10**

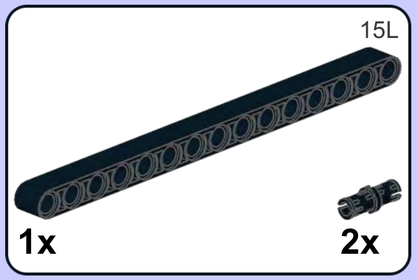


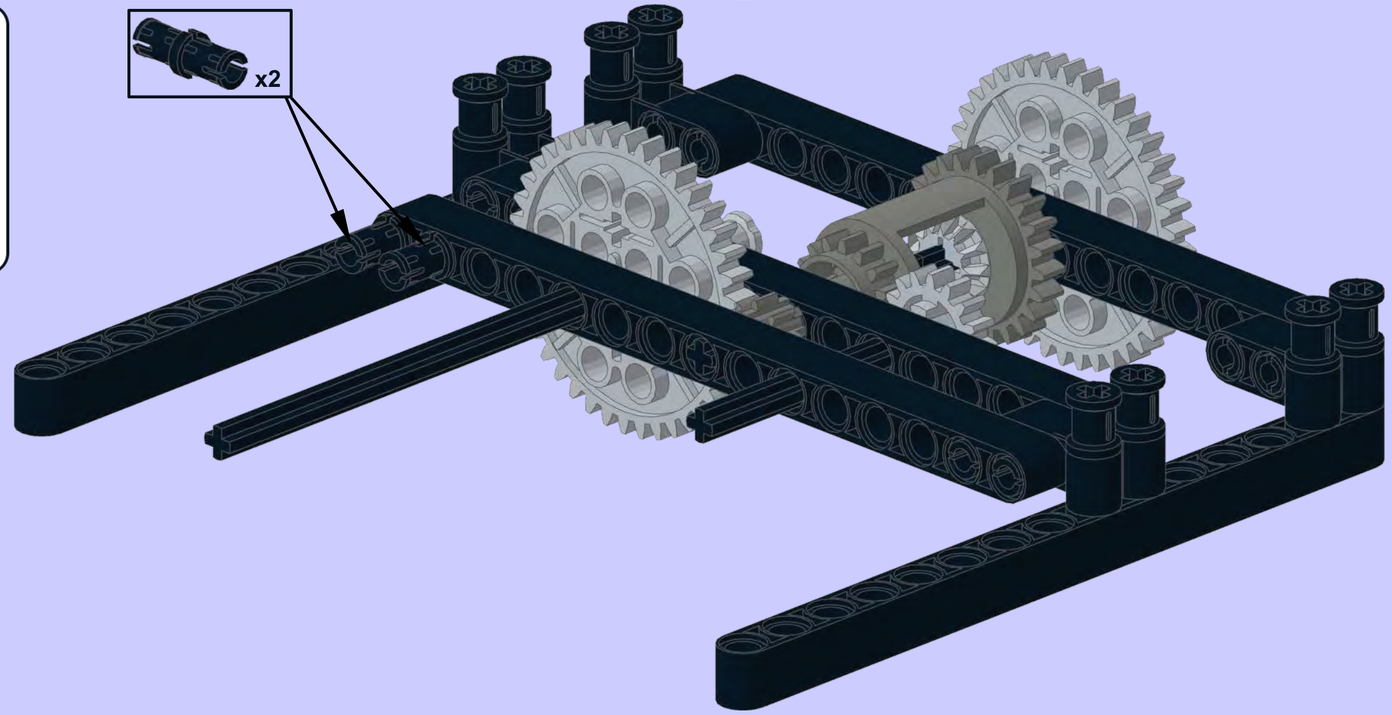

**11**

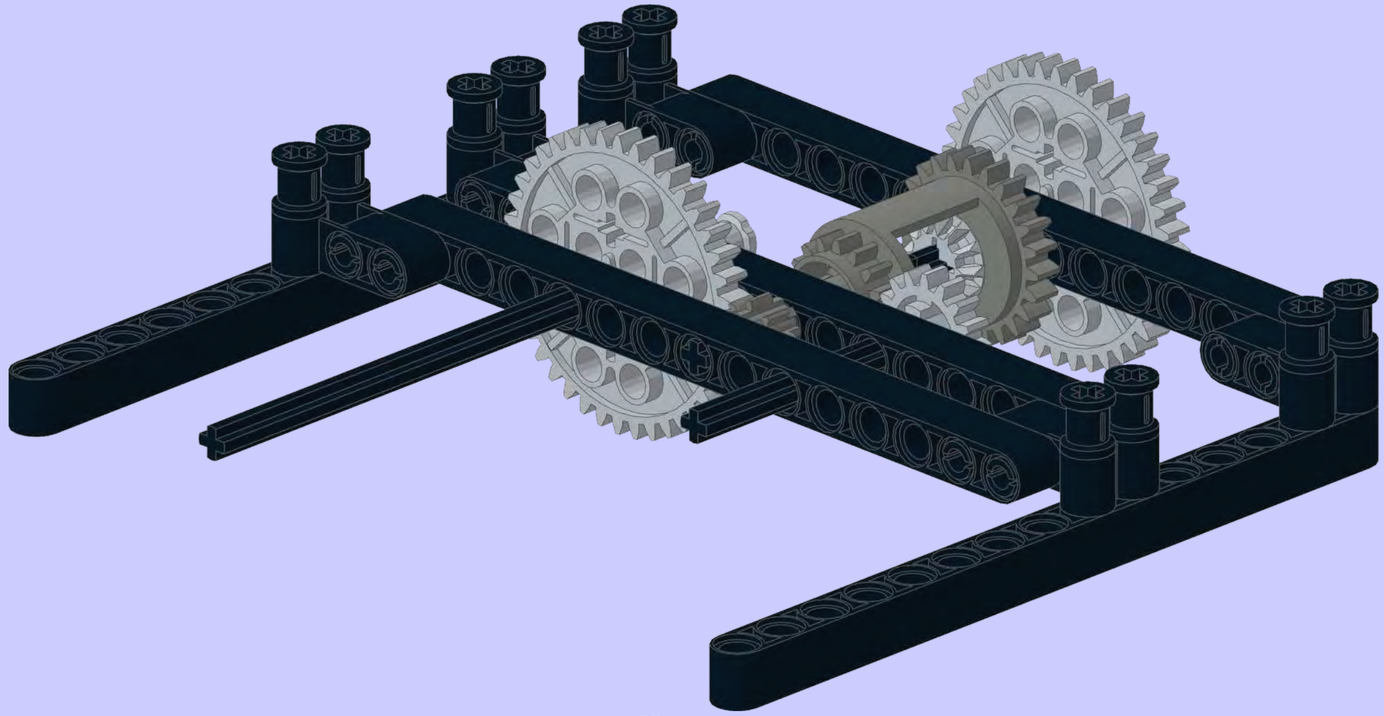

**12**

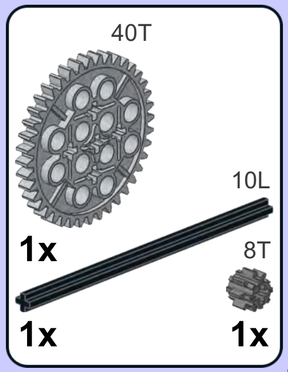


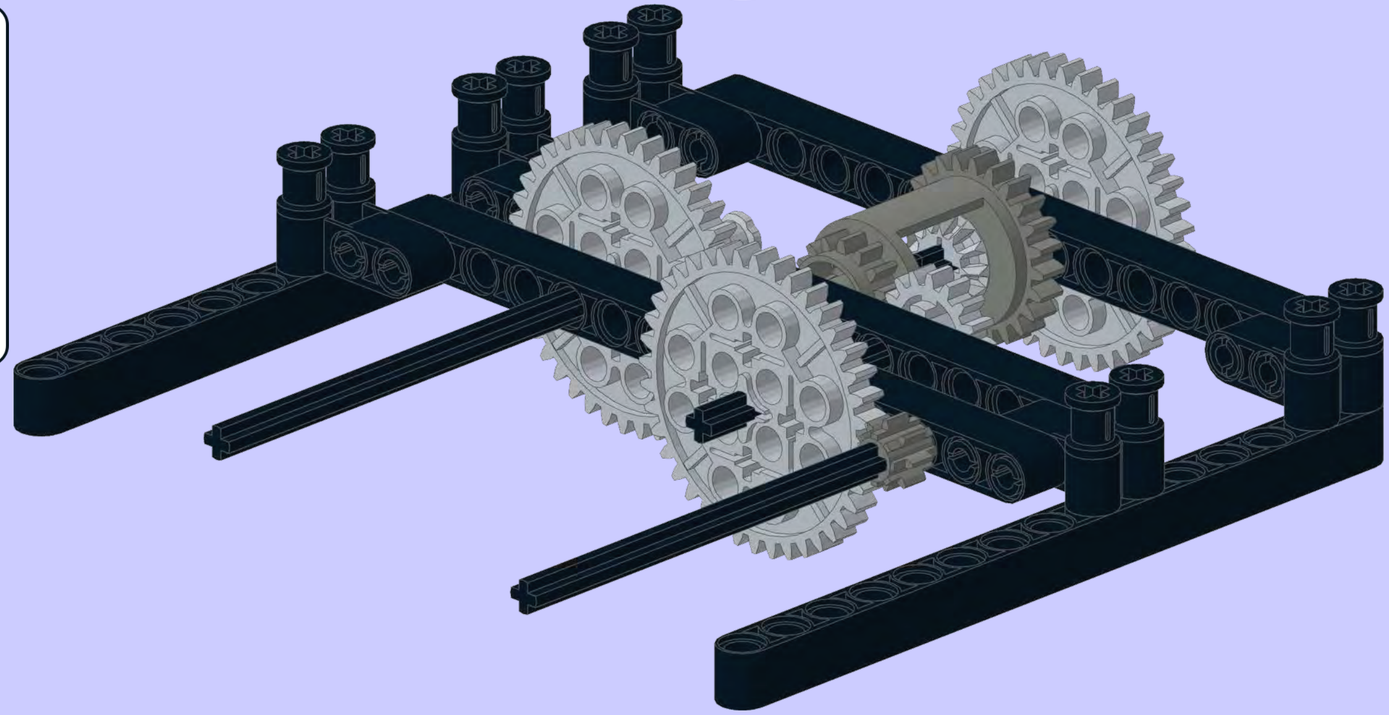

## Double cross support used as a basic building component - 14 required

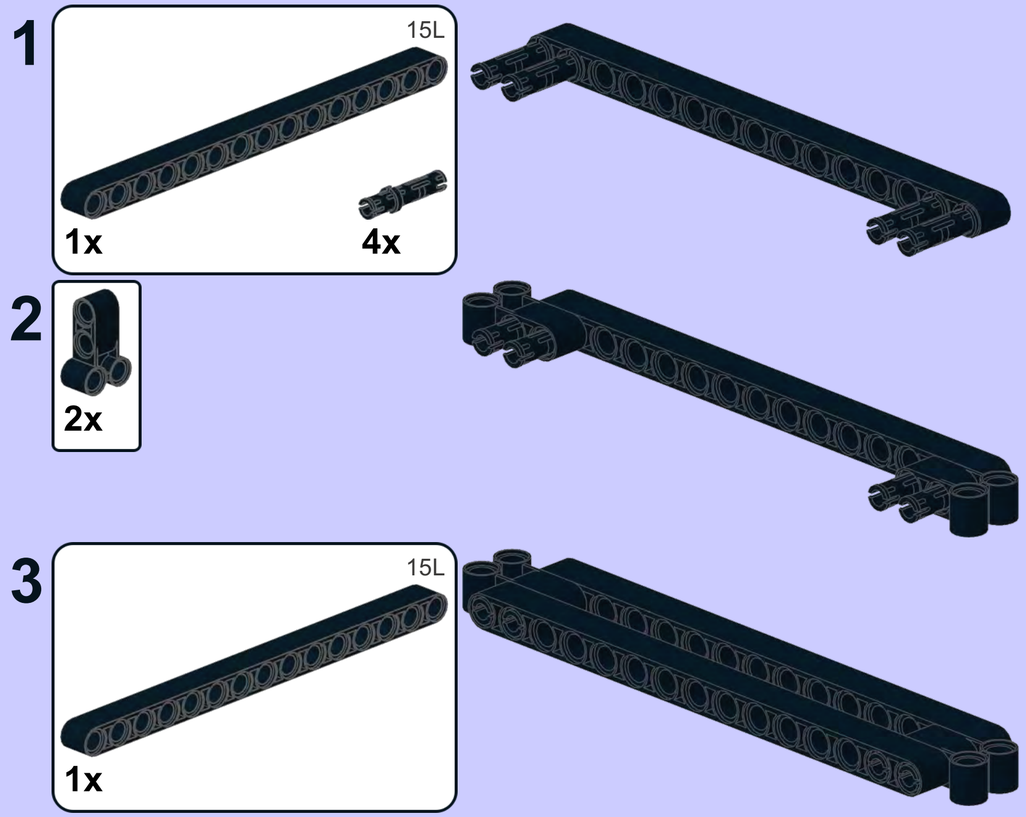


x14

13

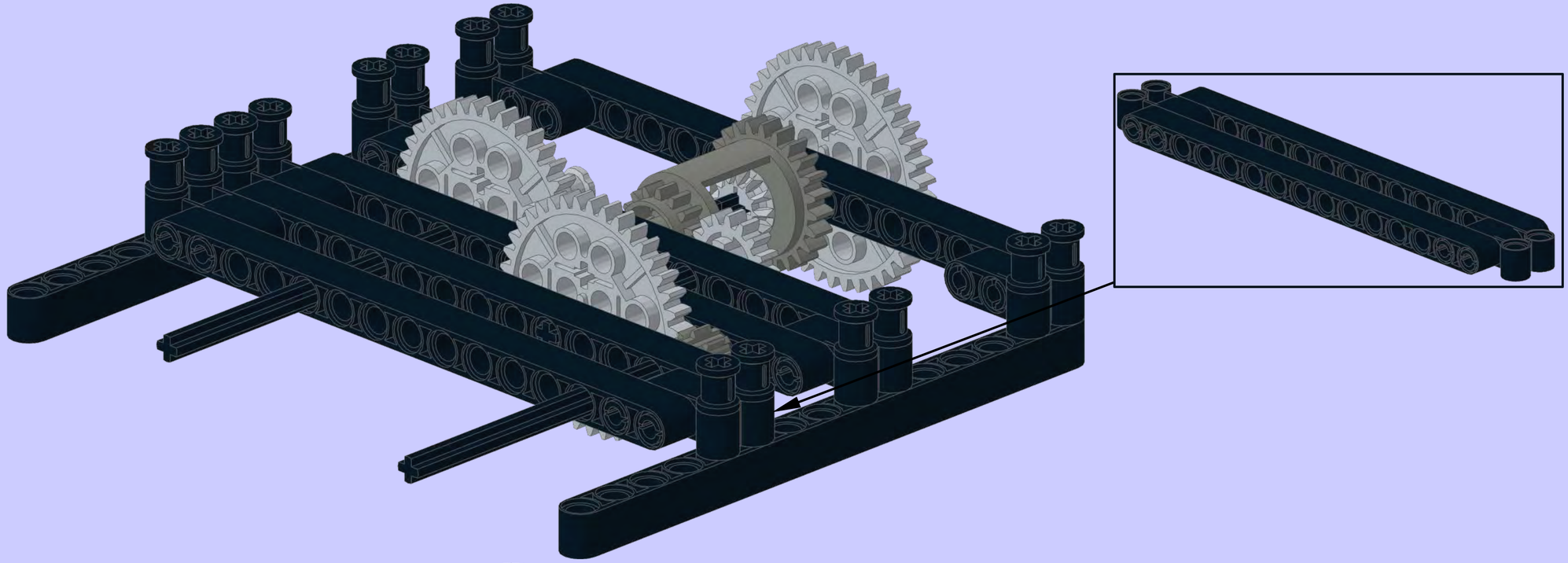

14

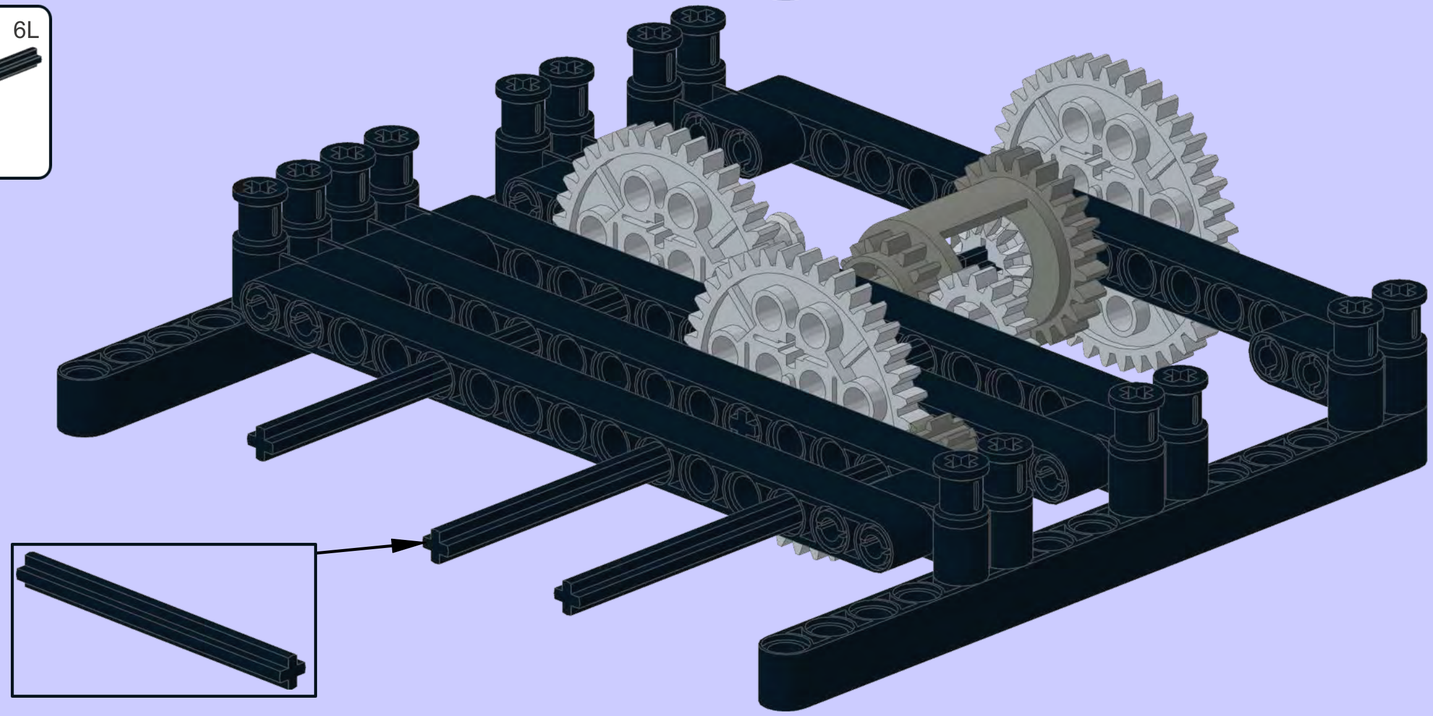

**15**

40T

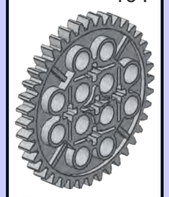

**2x**

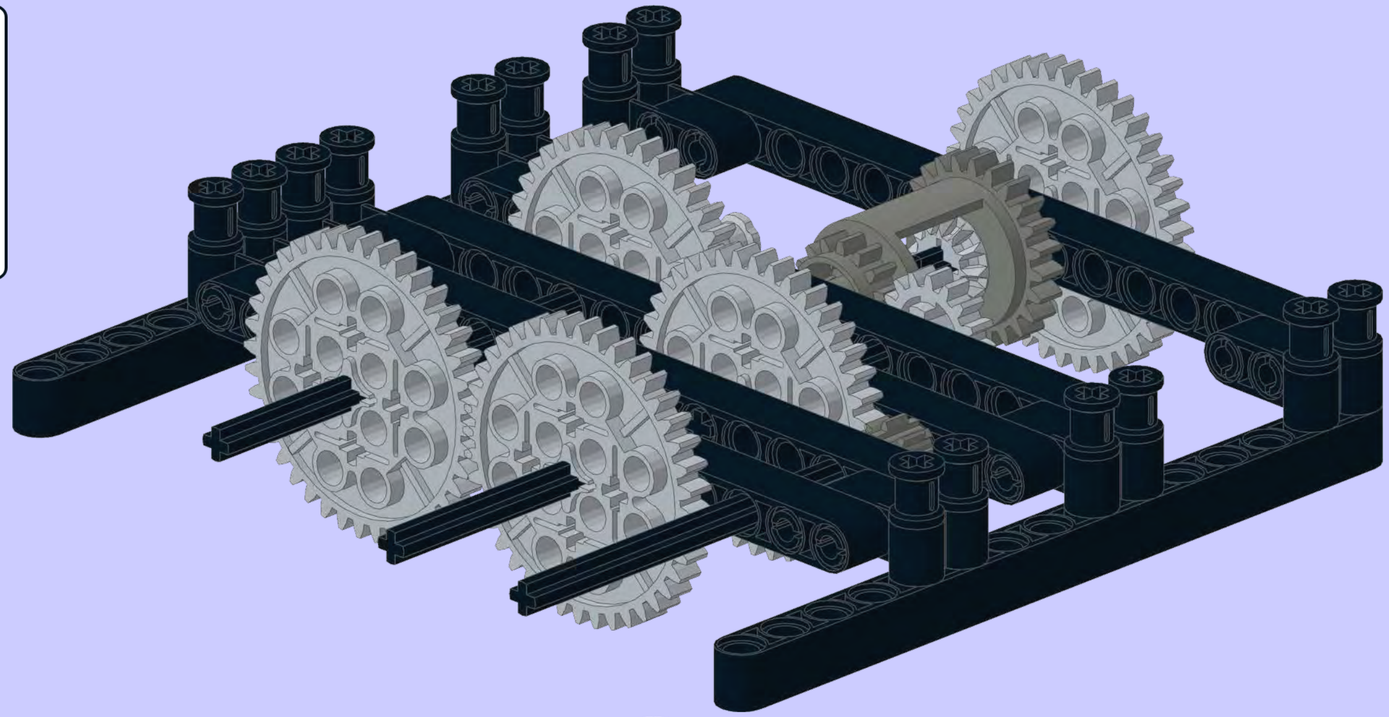

**16**

24T

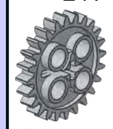

**1x**

**4x**

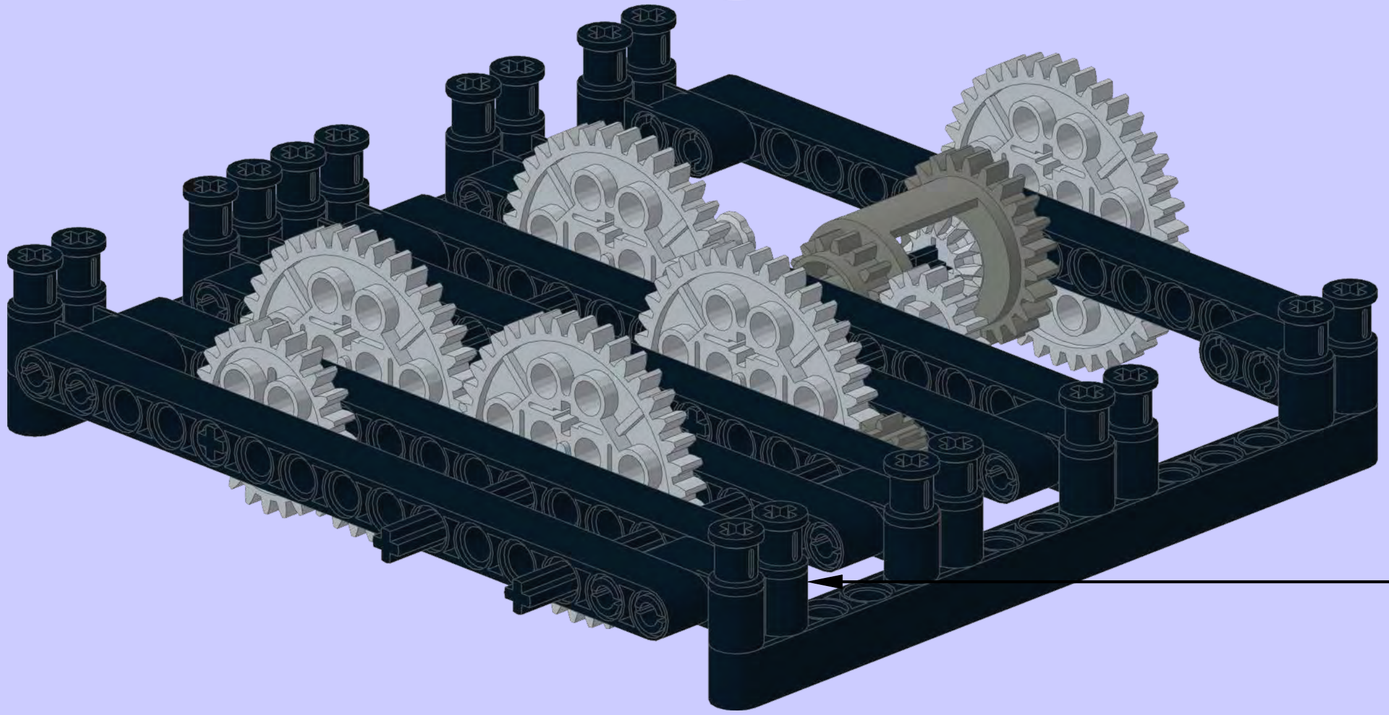

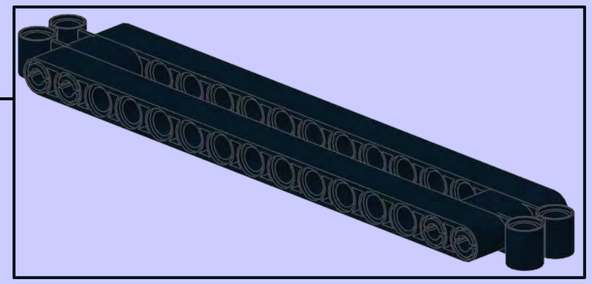

## 17

24T

1x

5L

1x

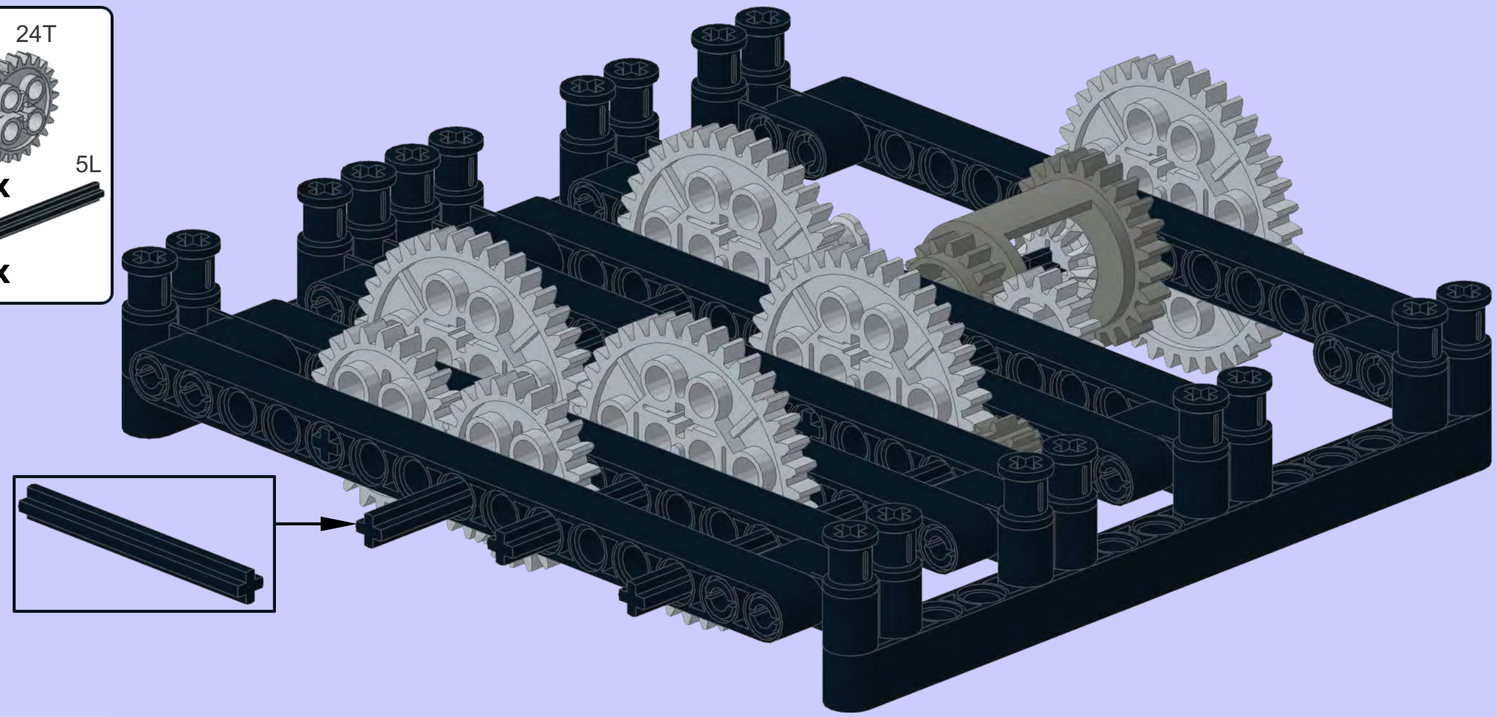

## 18

8T

1x

40T

1x

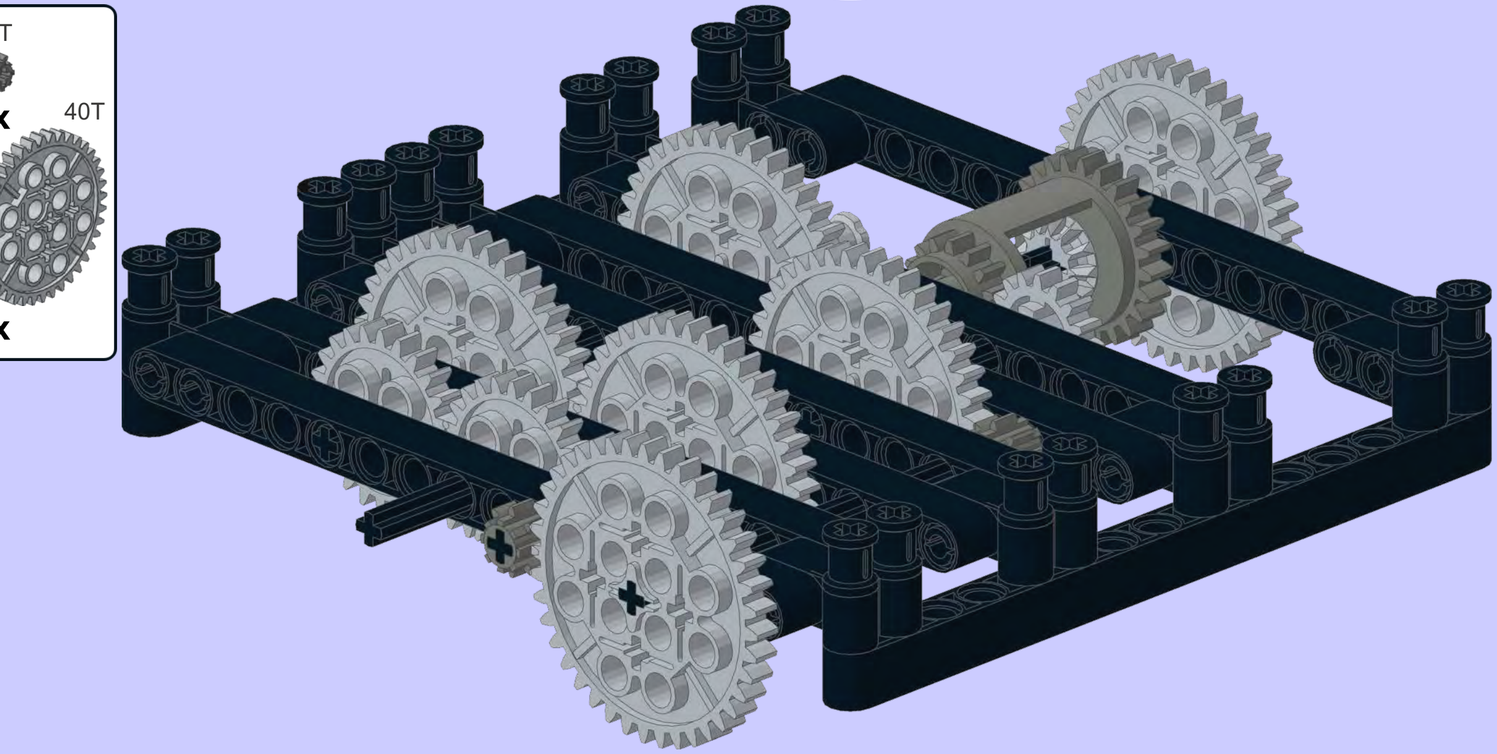

19

1x

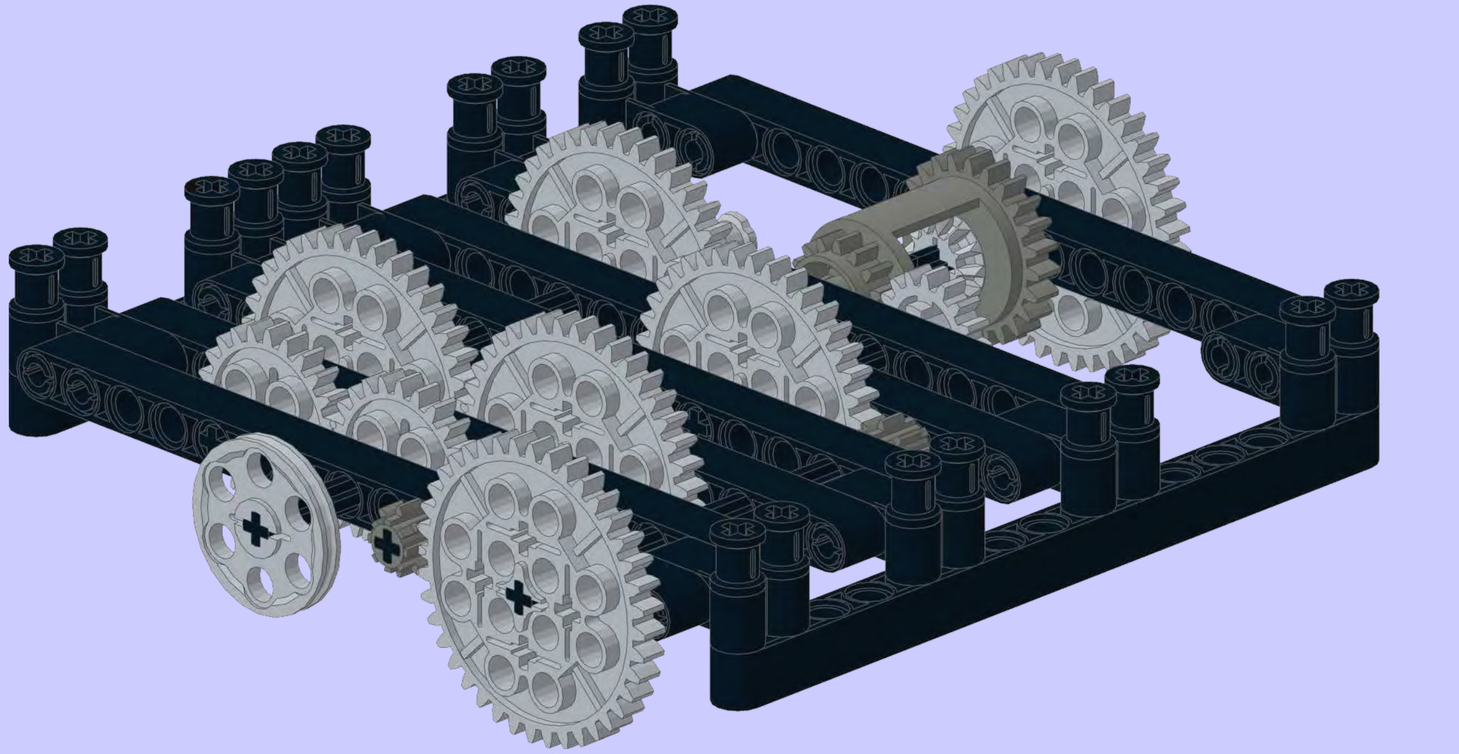

20

8x

4x

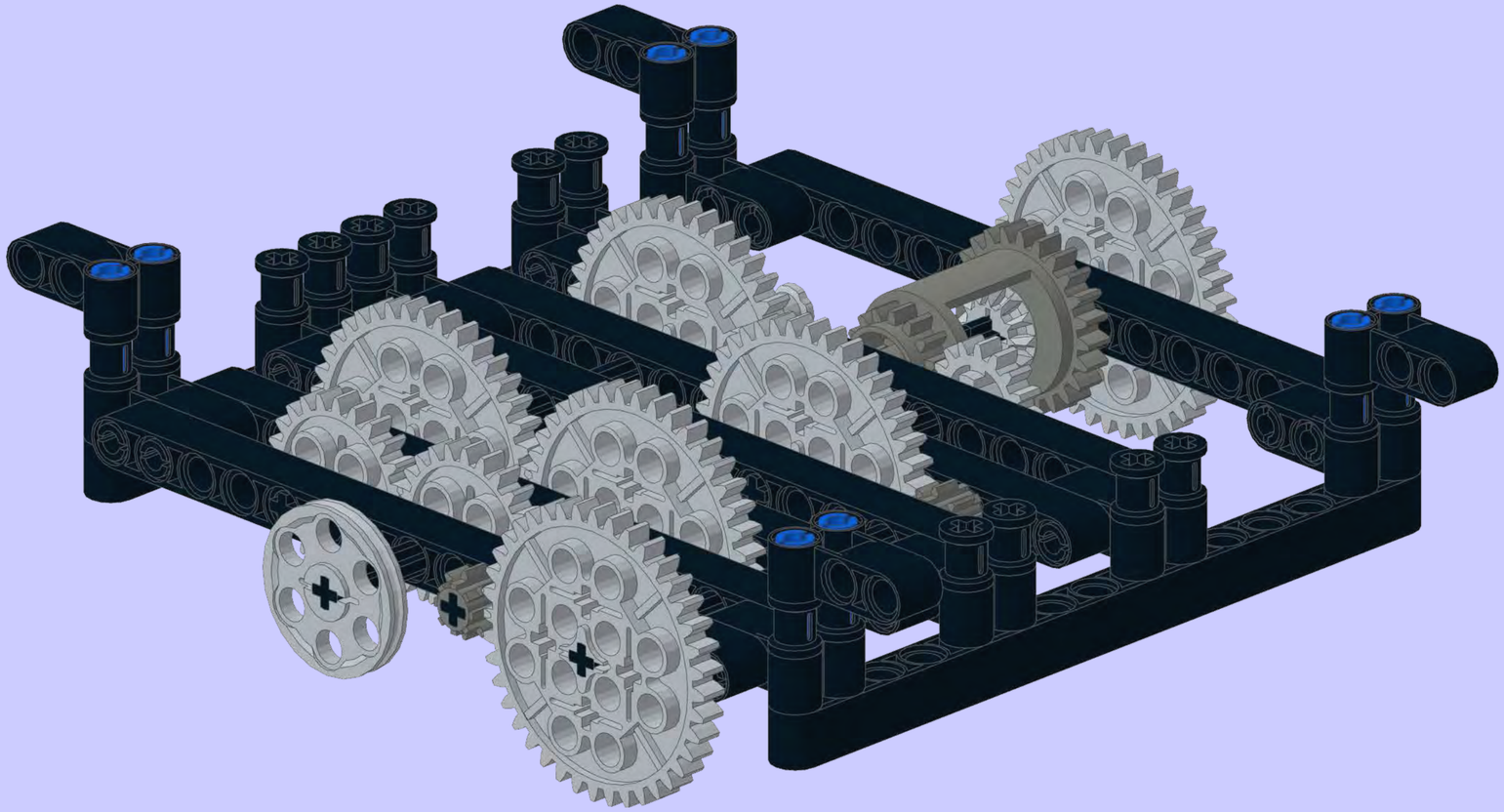

1

## Right Bottom Back (RBB) rack - using standard base

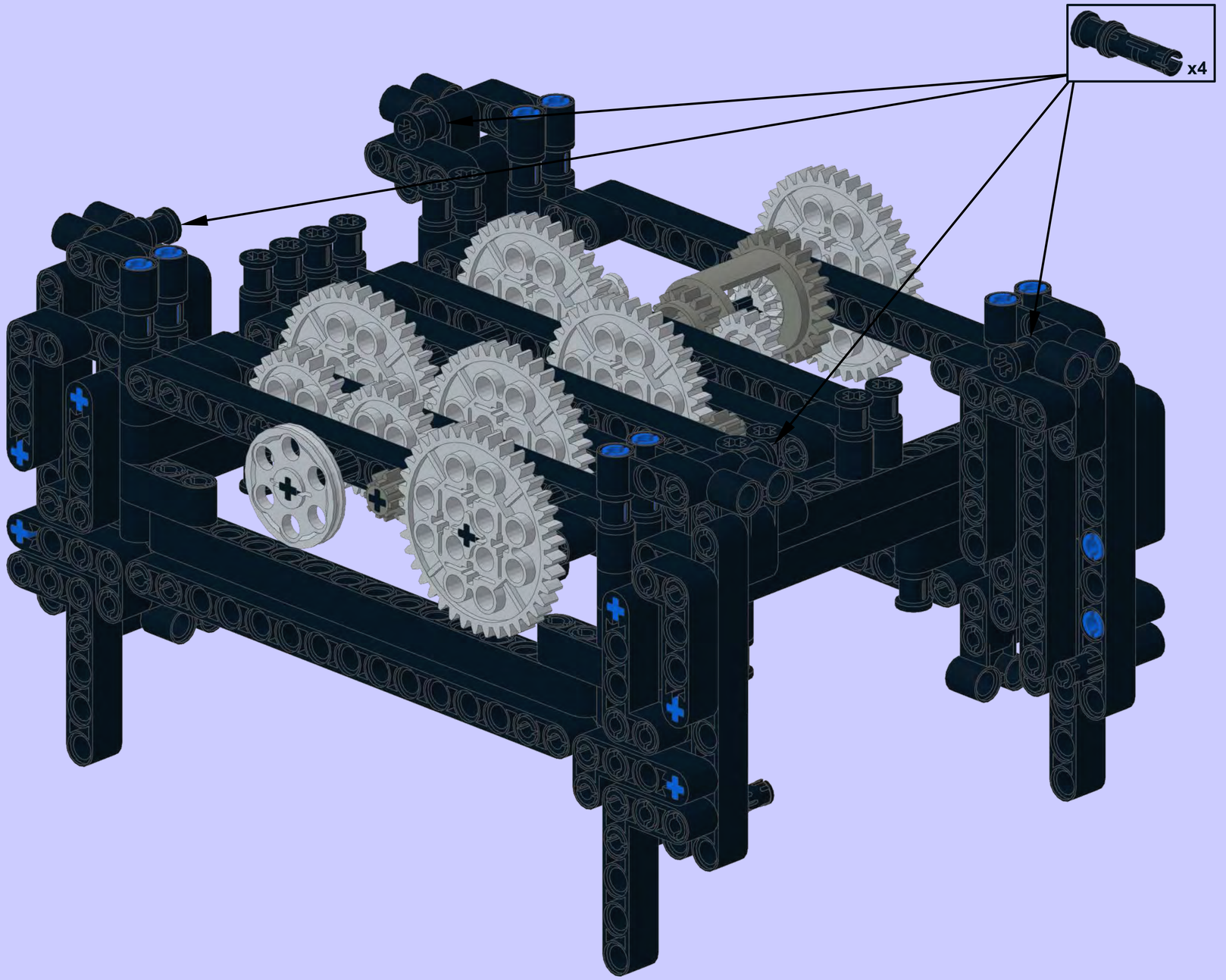

2

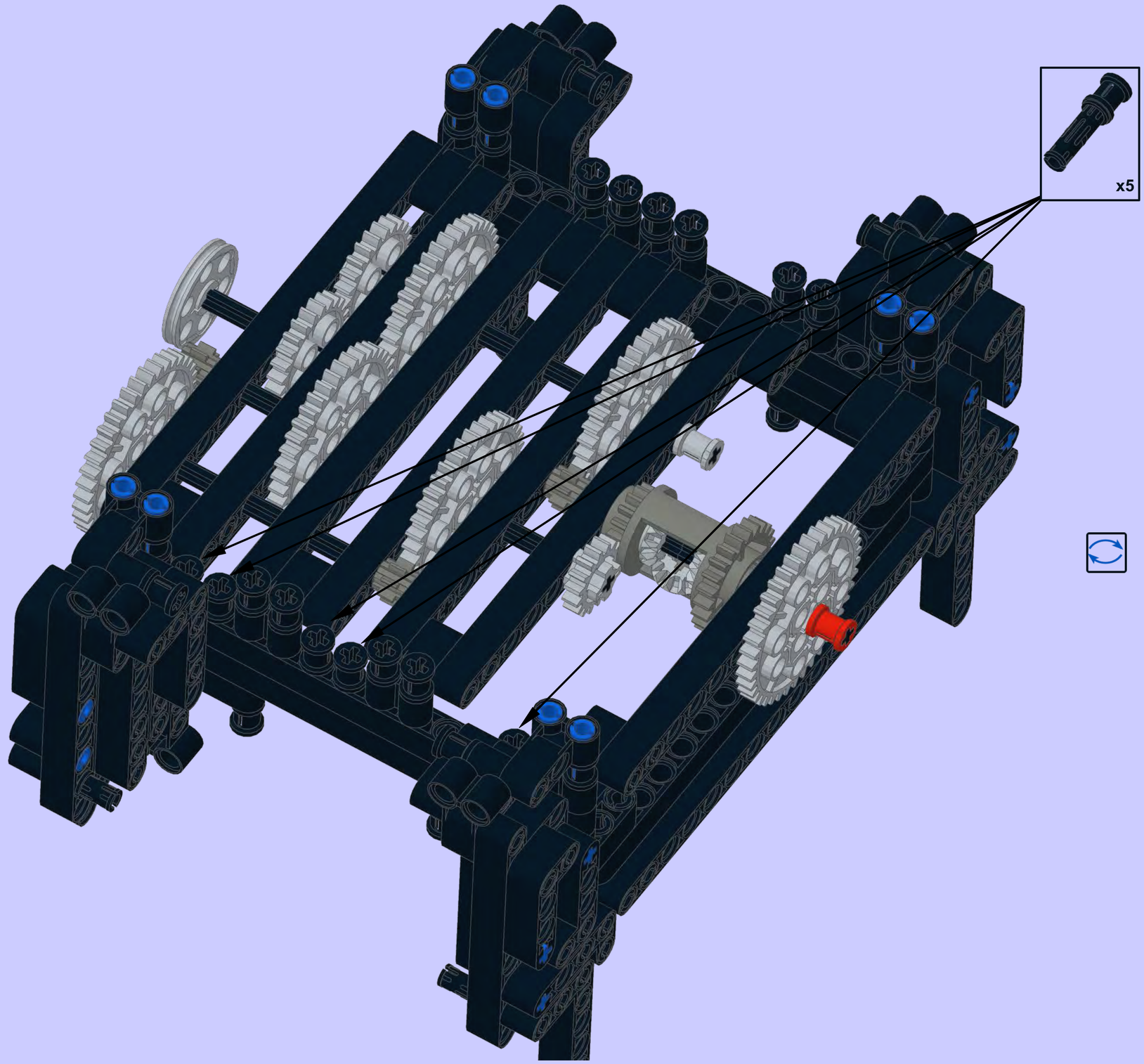

3

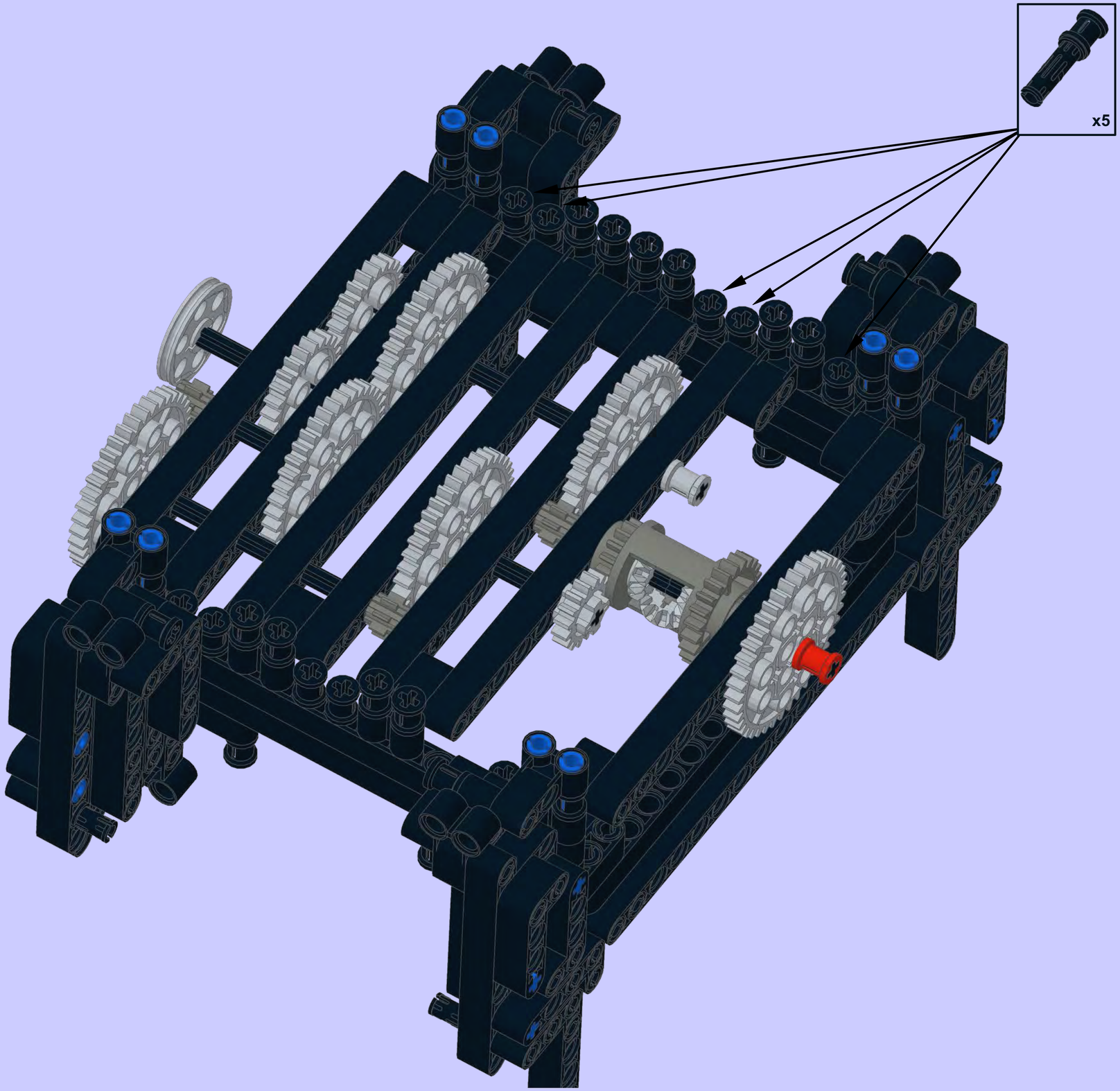

4

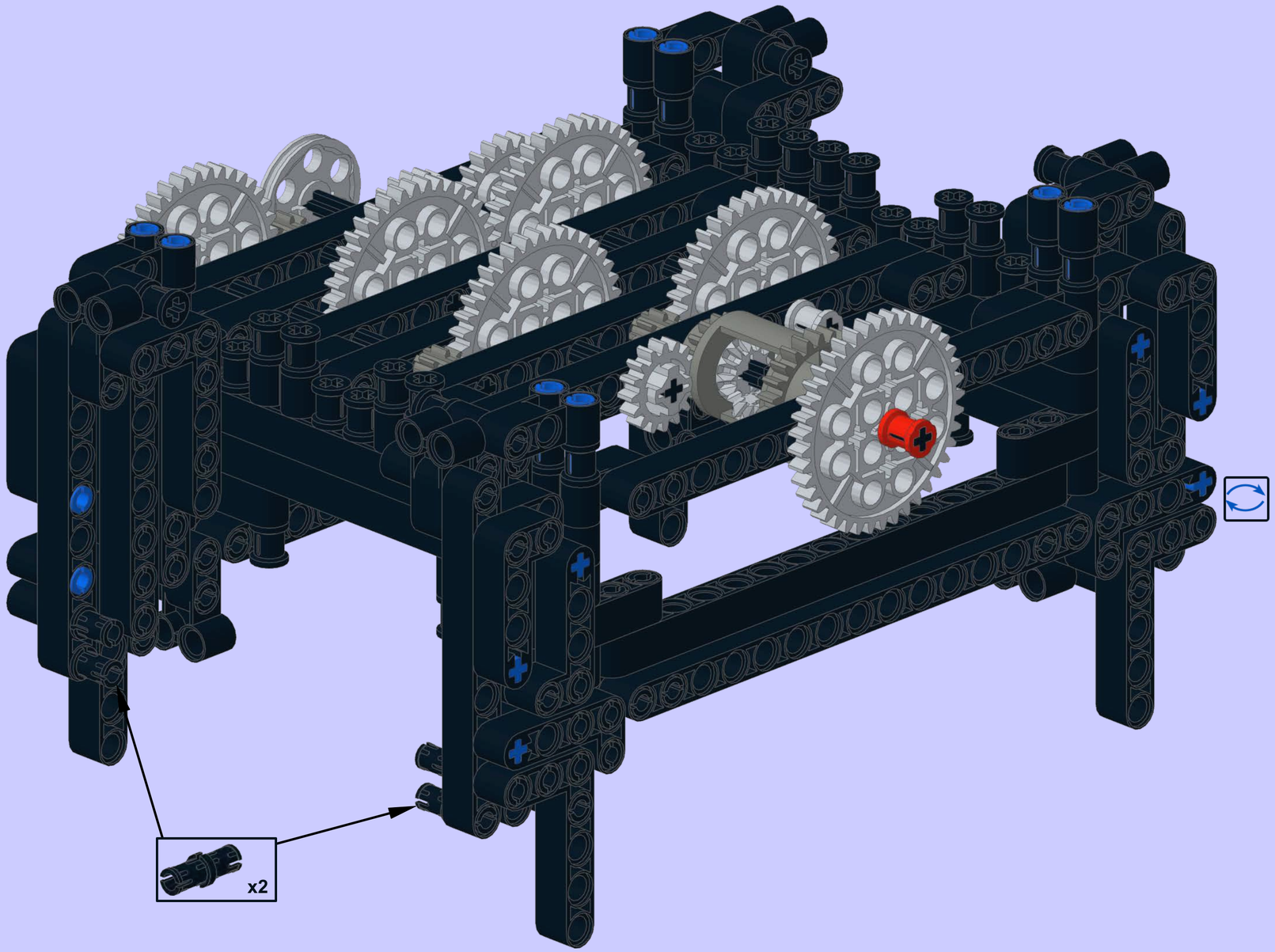

5

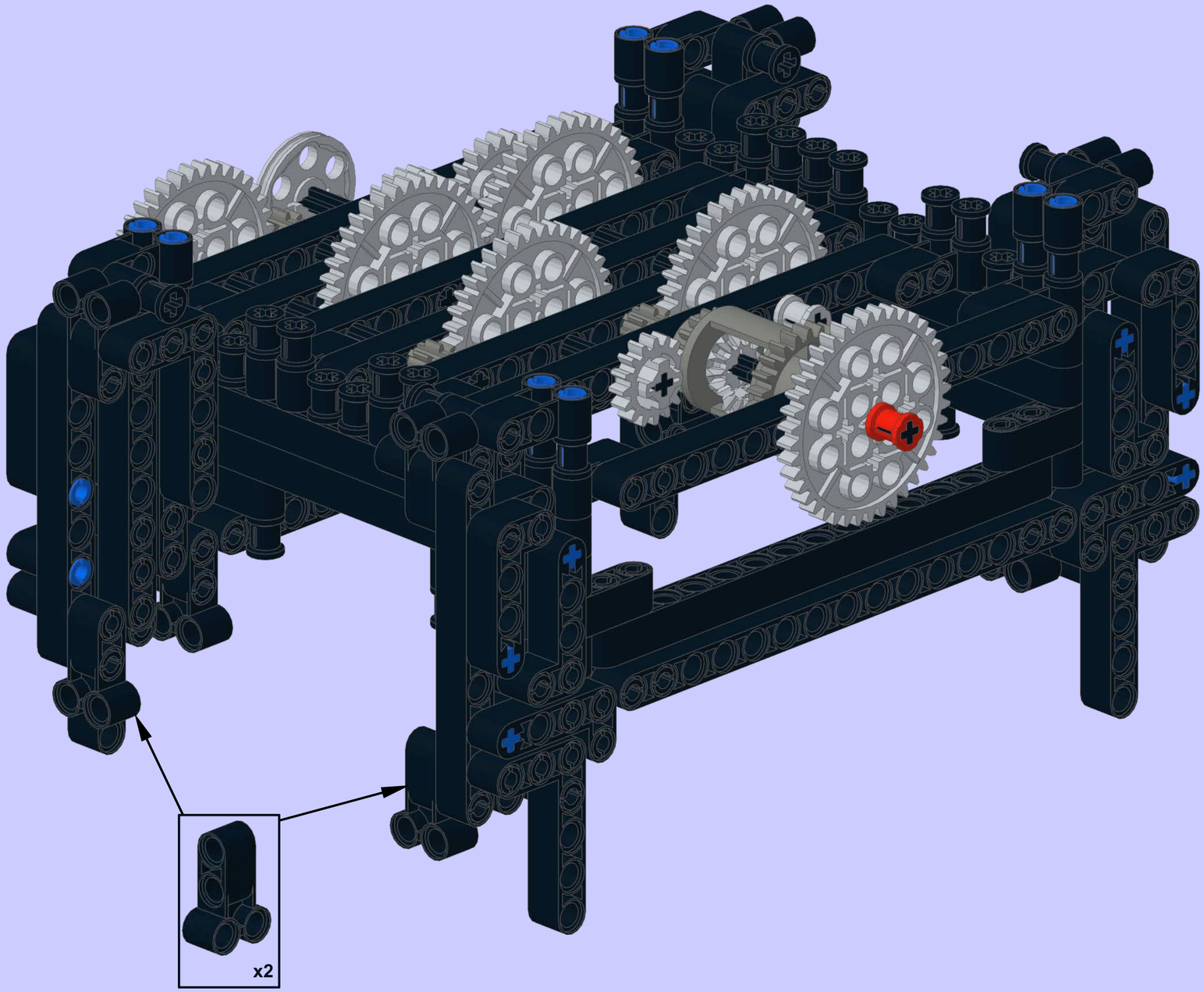

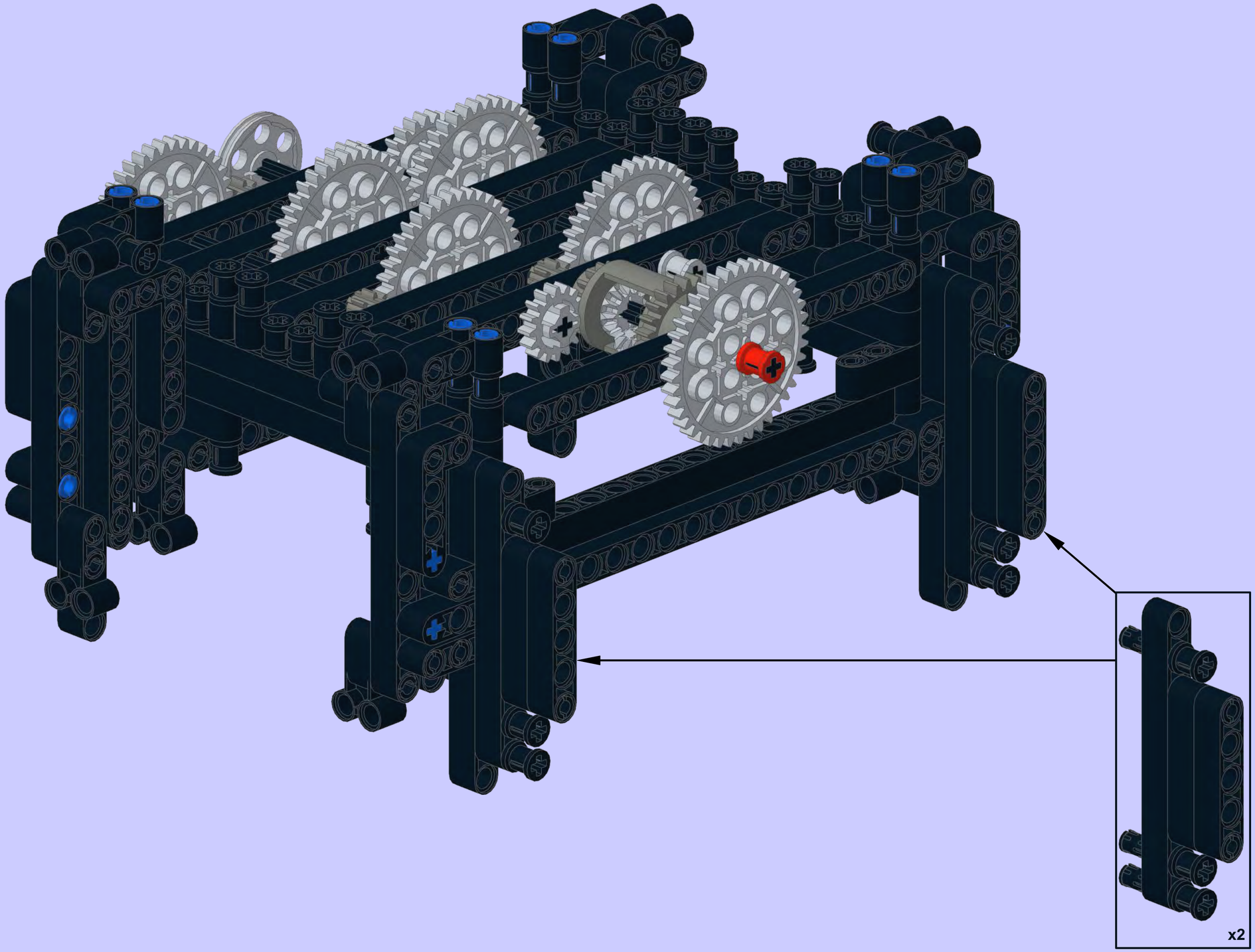
x2

7

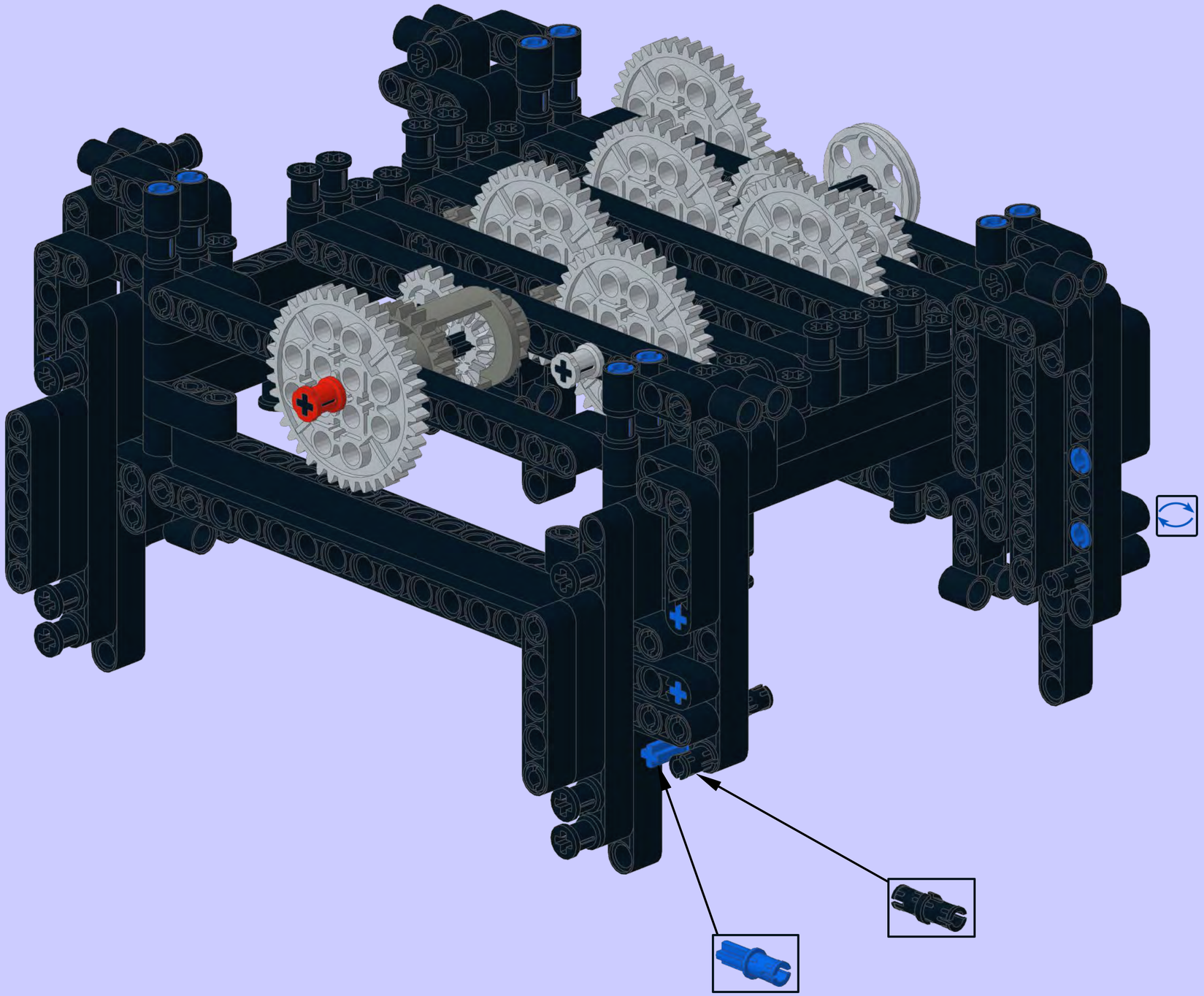

8

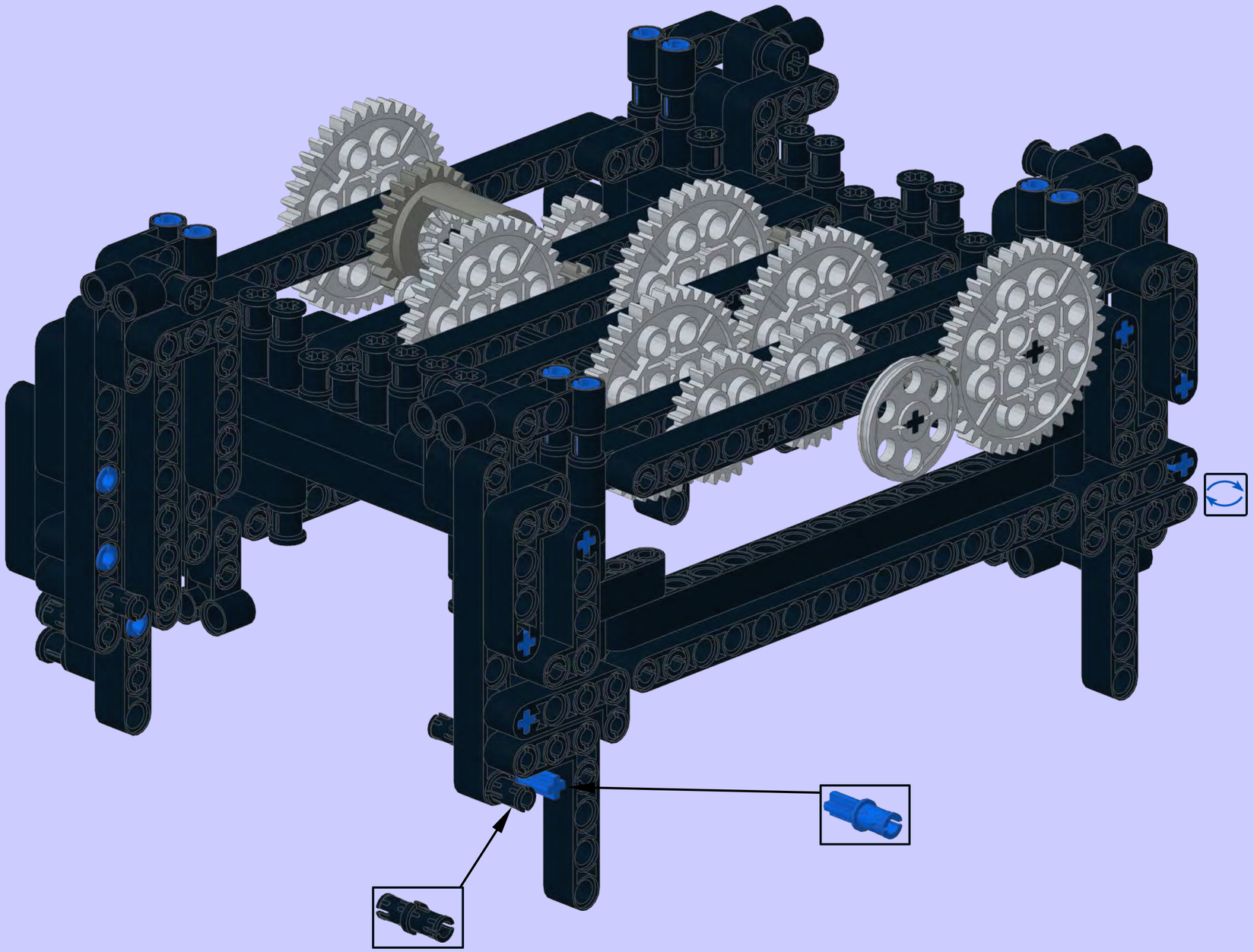

9

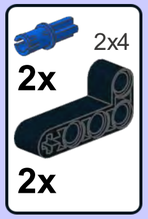


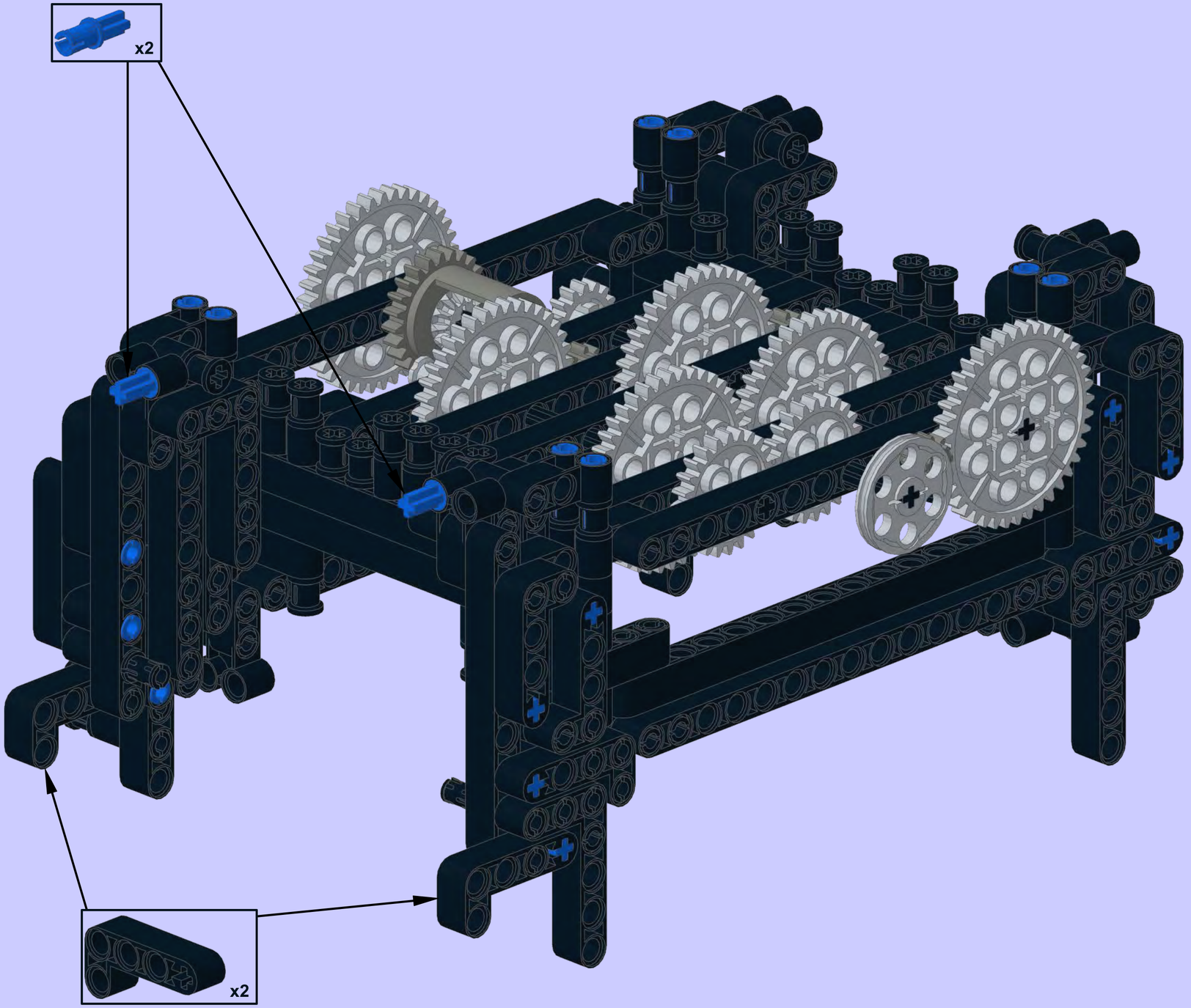

10

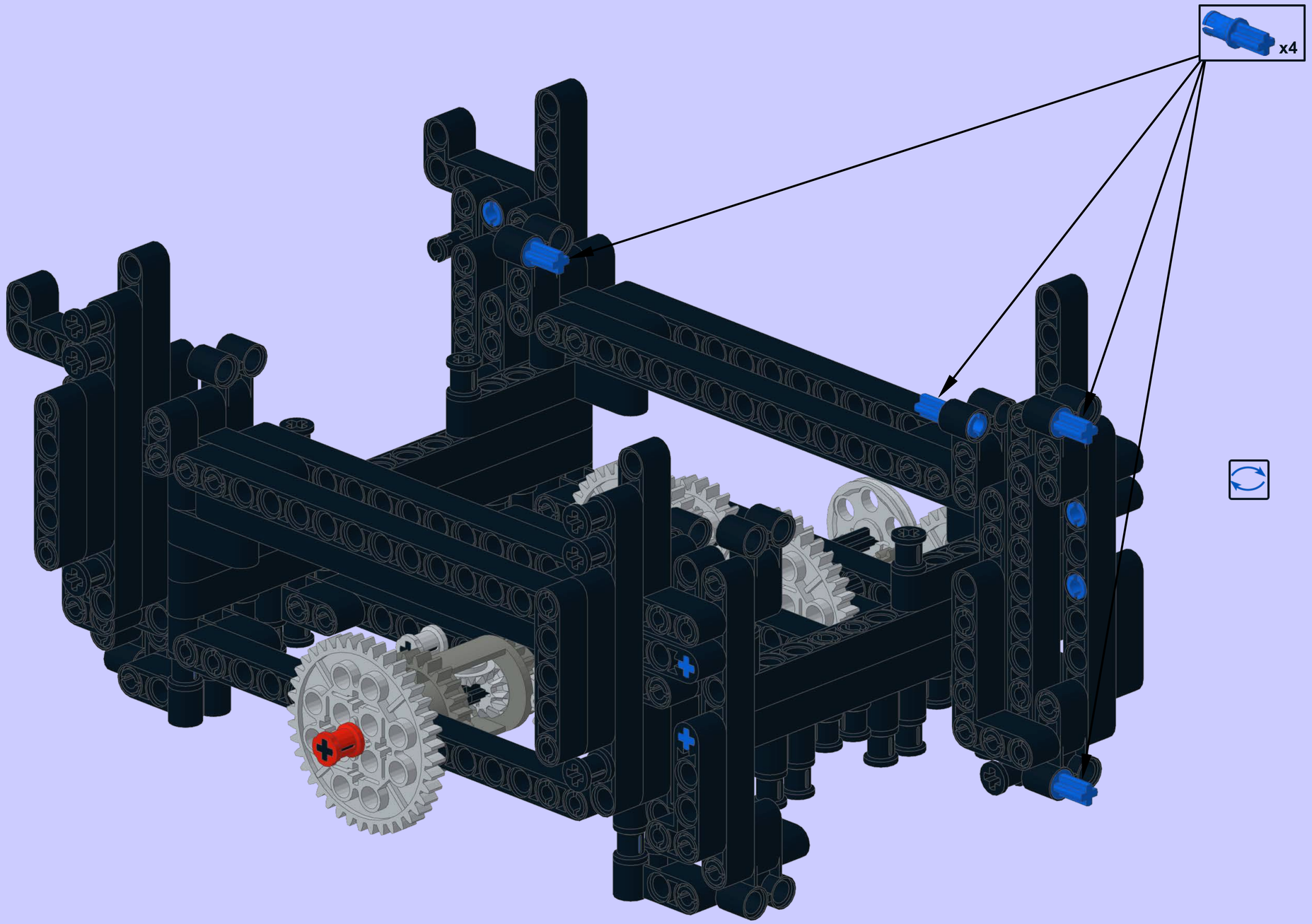

11

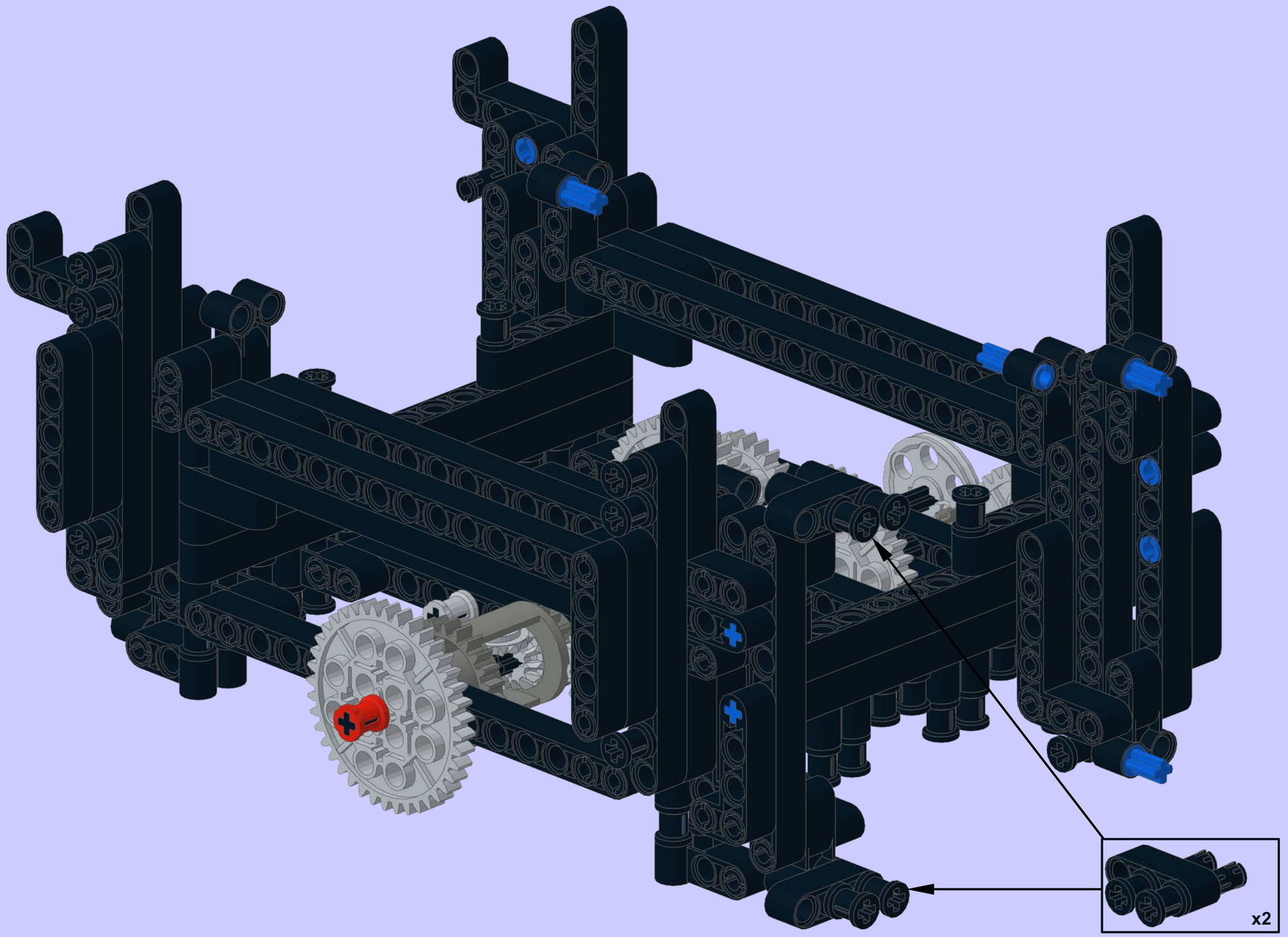

1

## Right Top Back (RTB) rack - using standard base

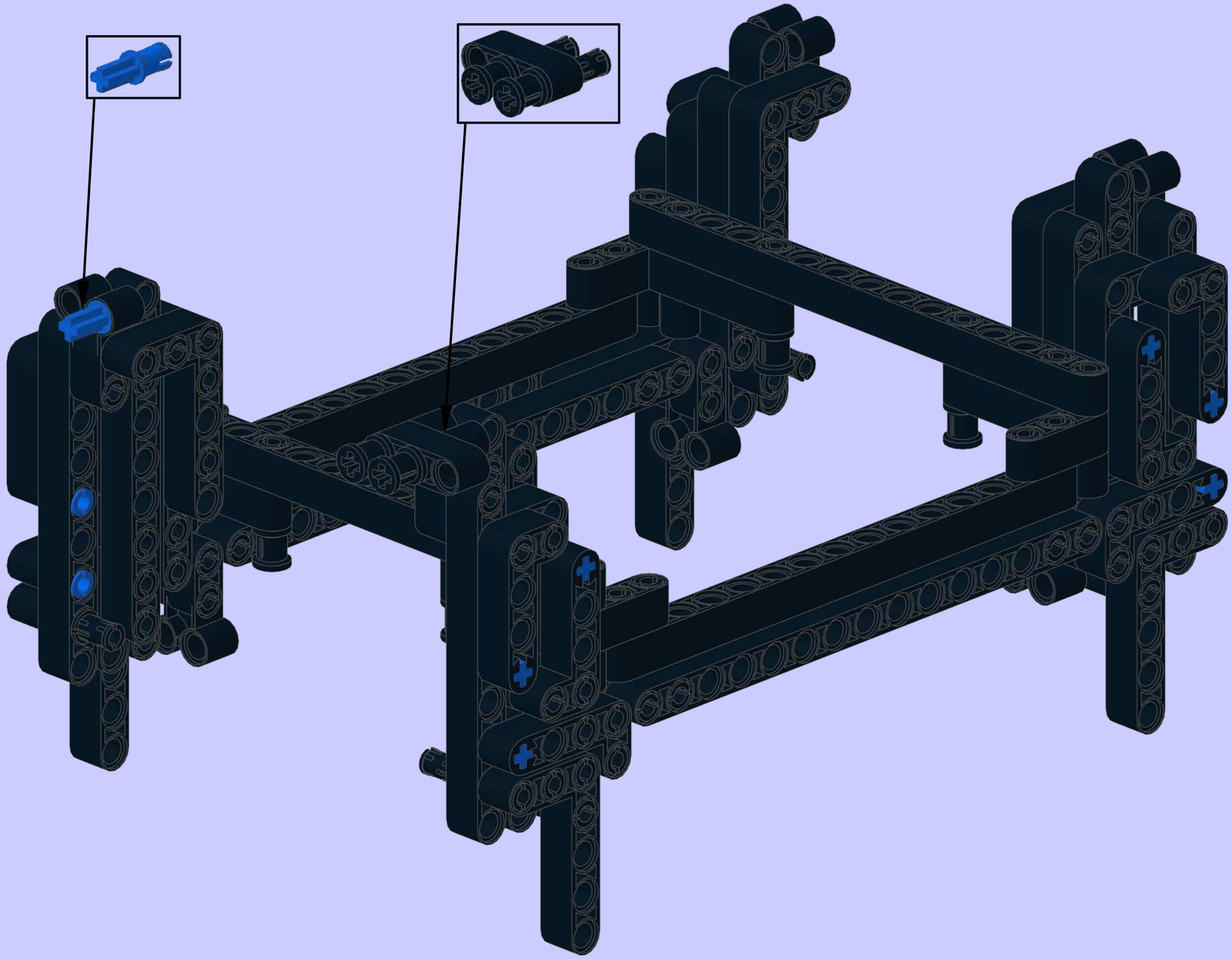

2

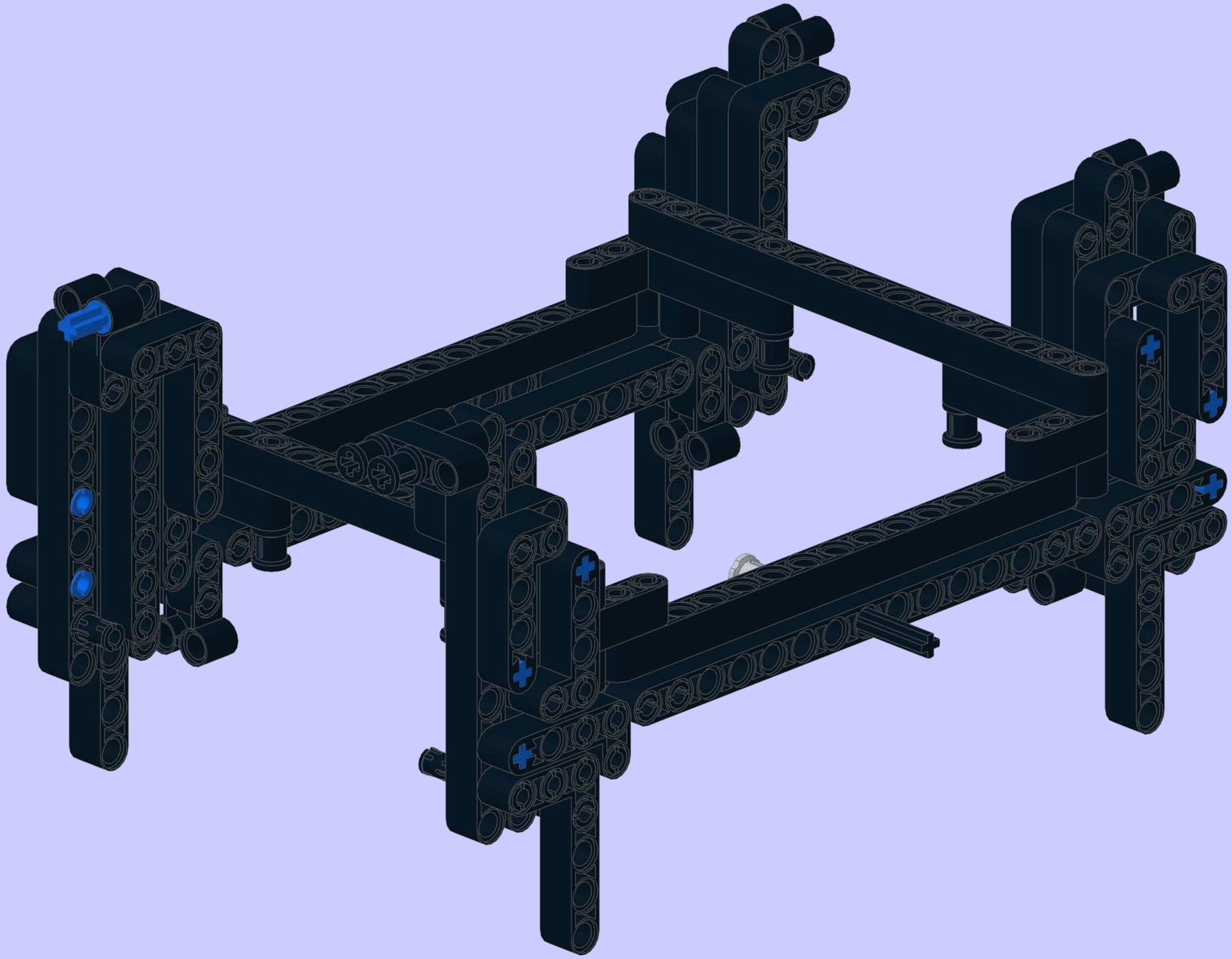

3

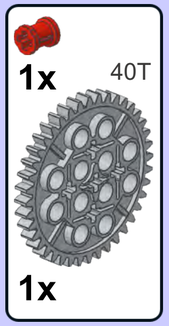


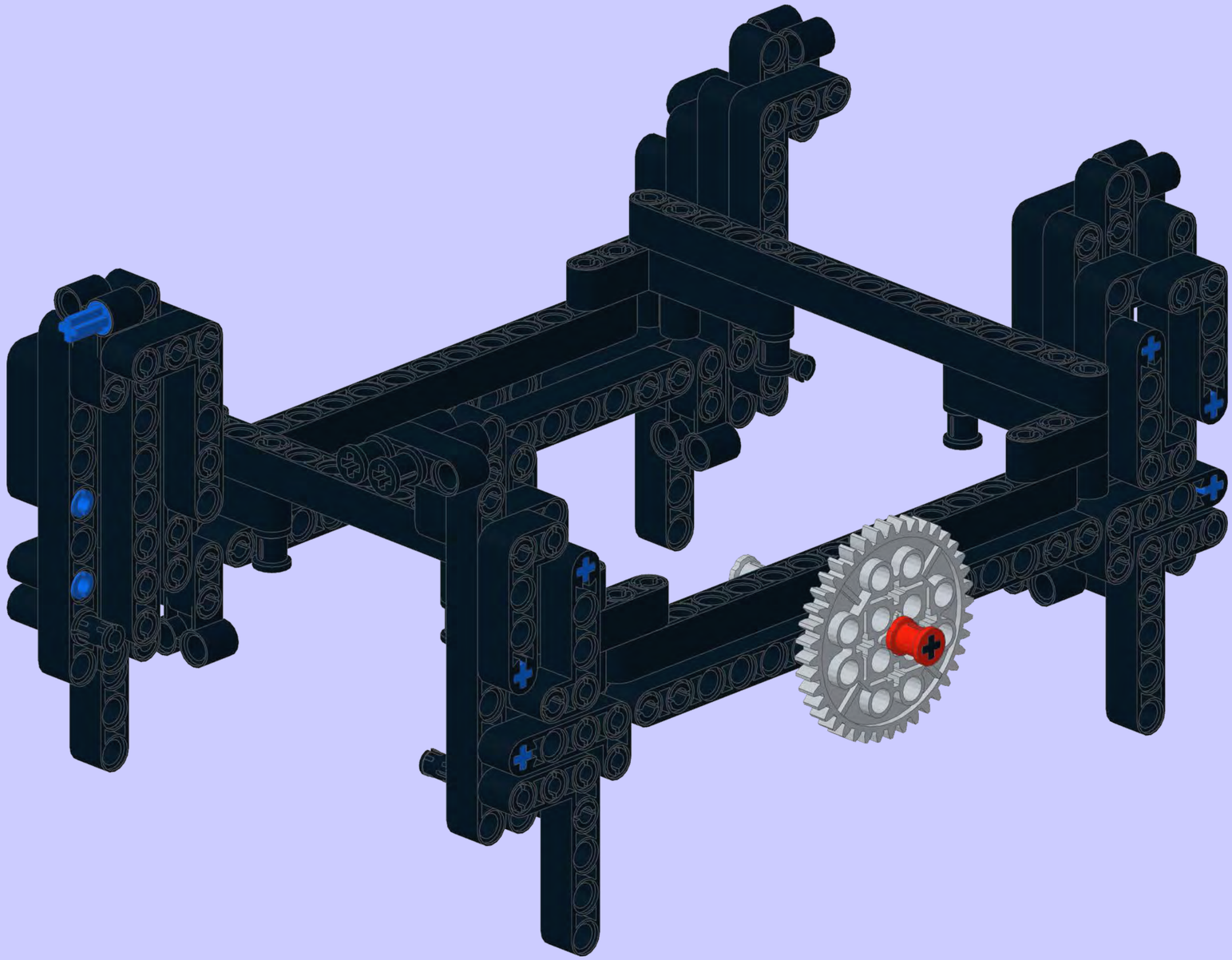

4

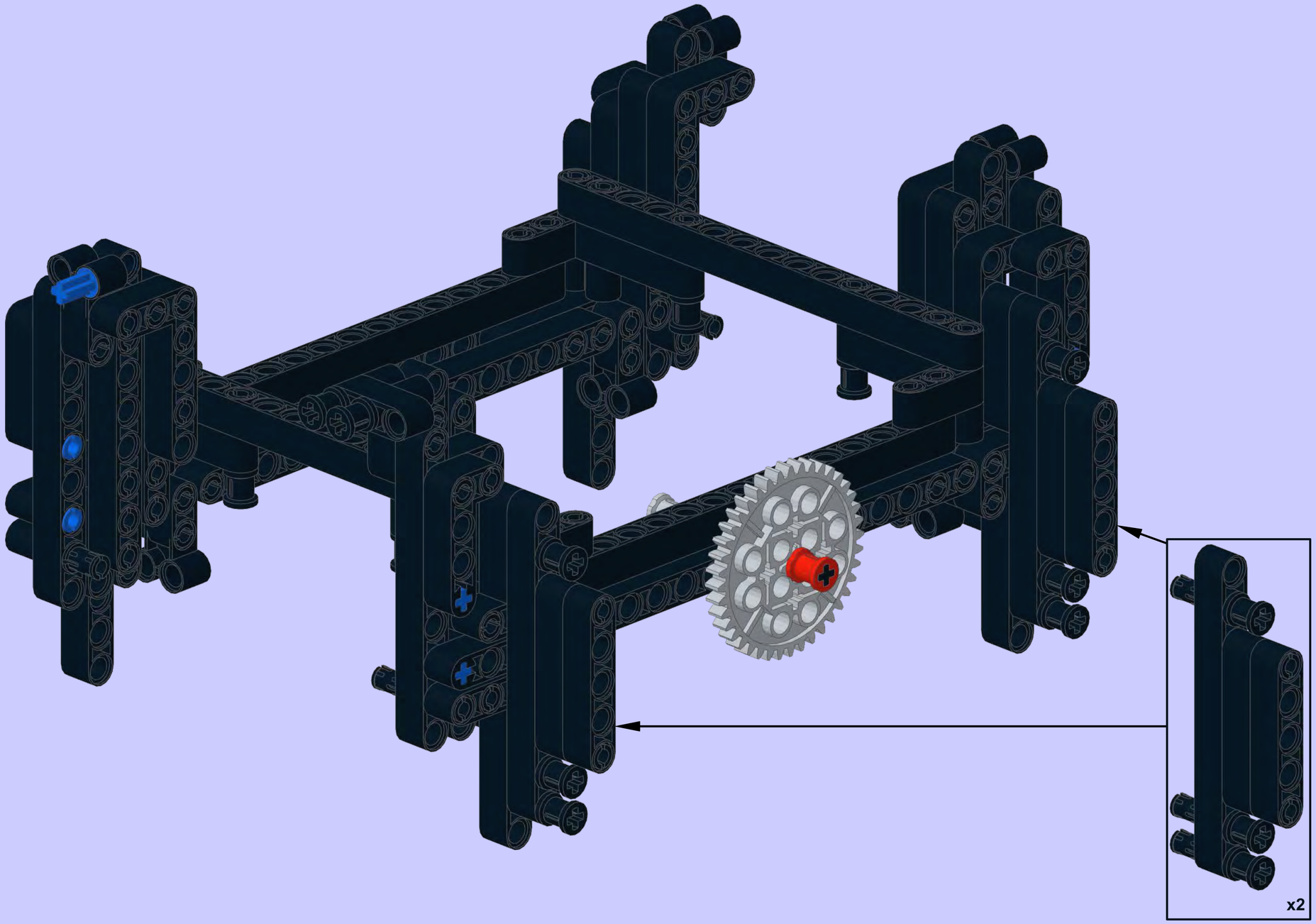

5

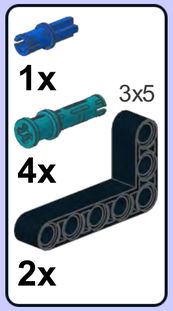


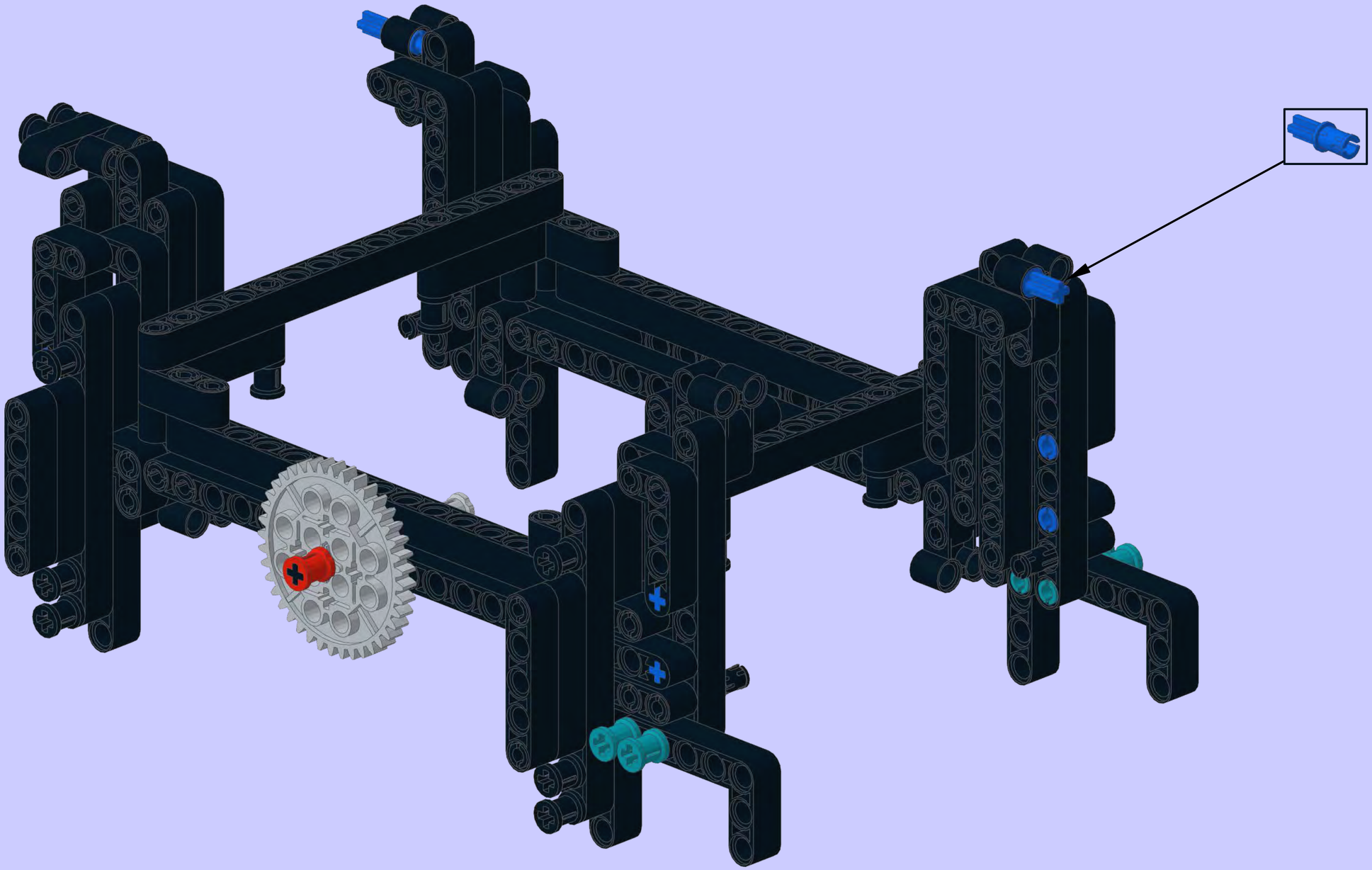

# Right Top Back (RTB) calculator - multiply by -2, divide by 19

**1**

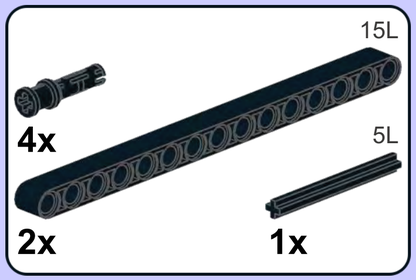


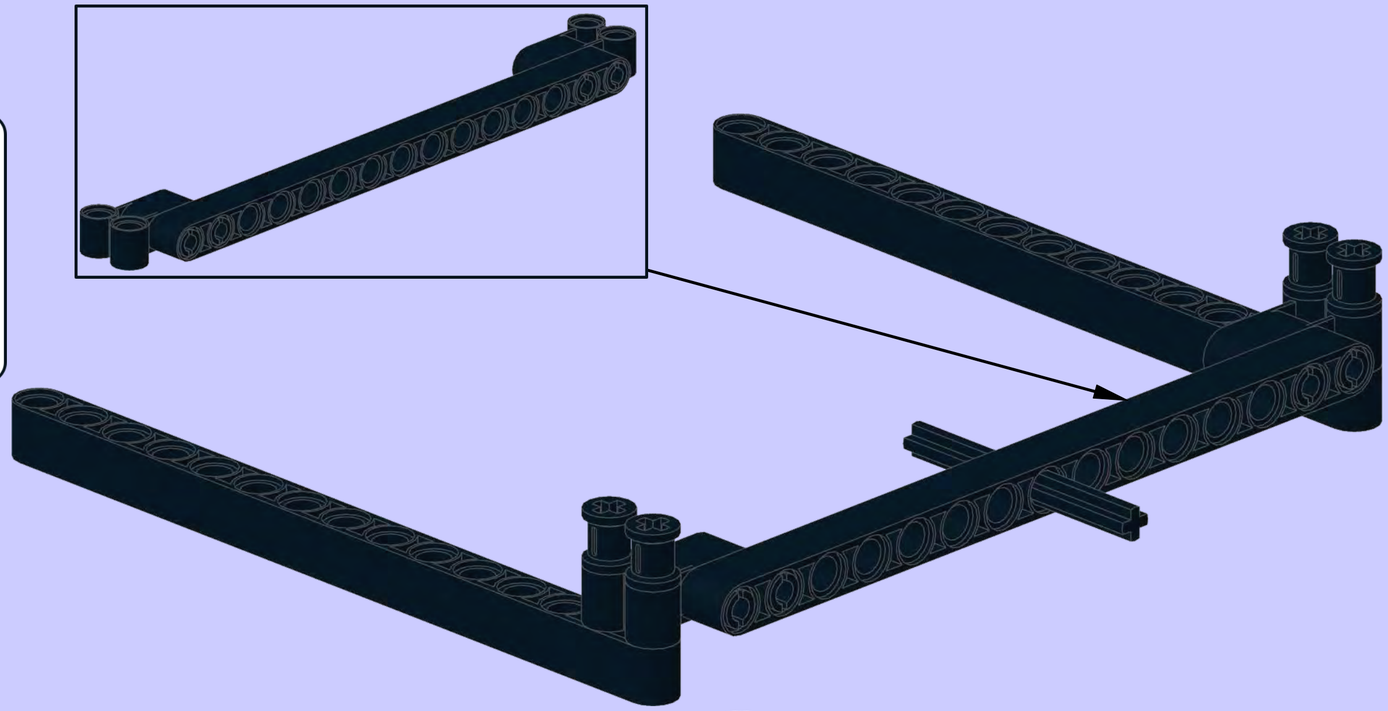

**2**

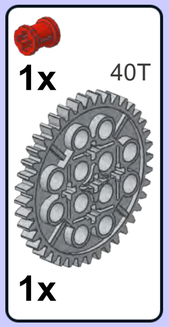


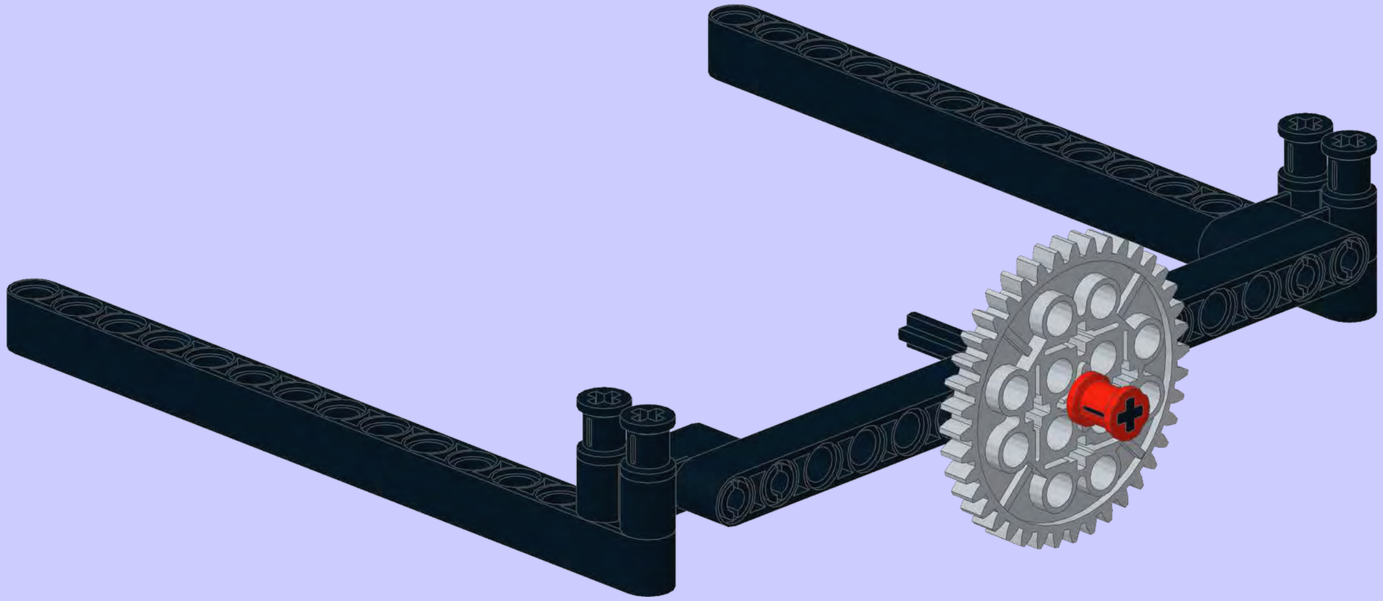

**3**

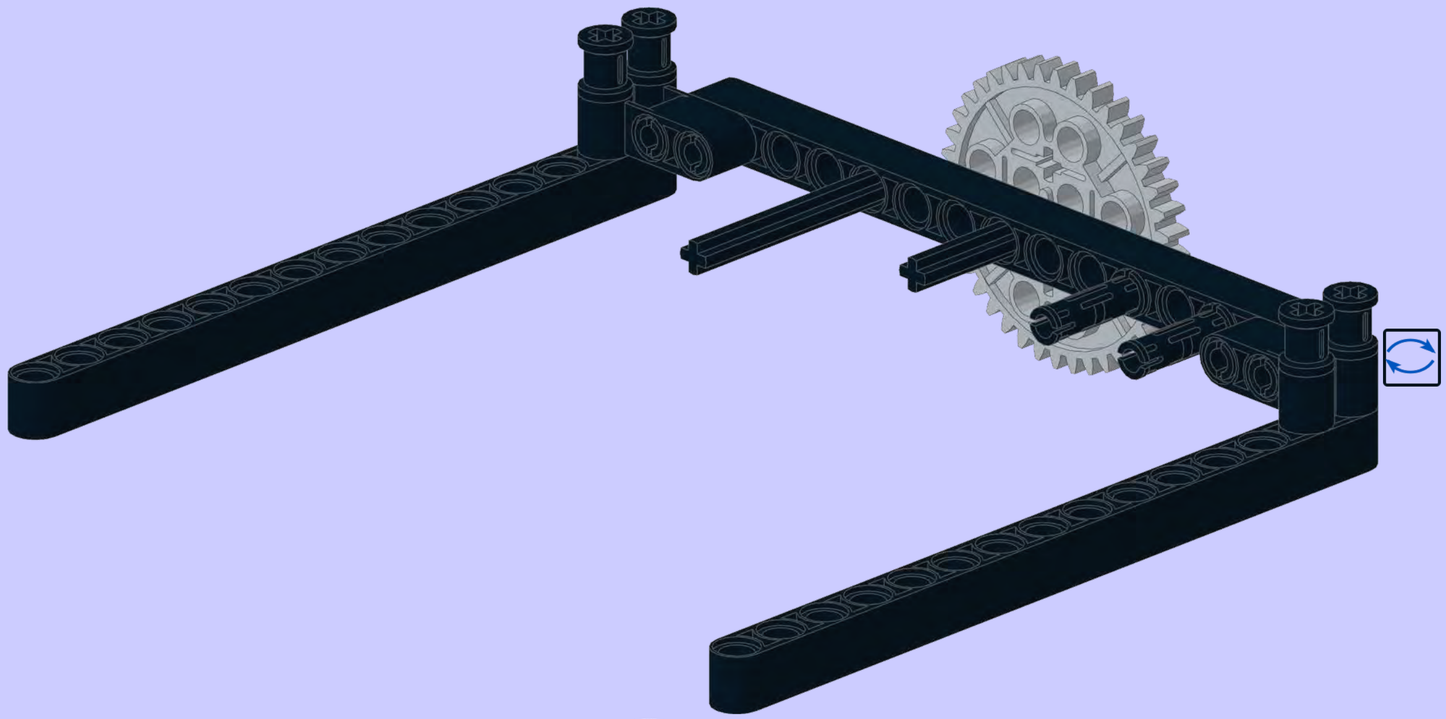

**4**

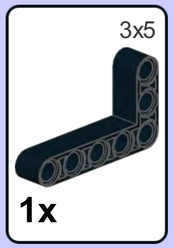


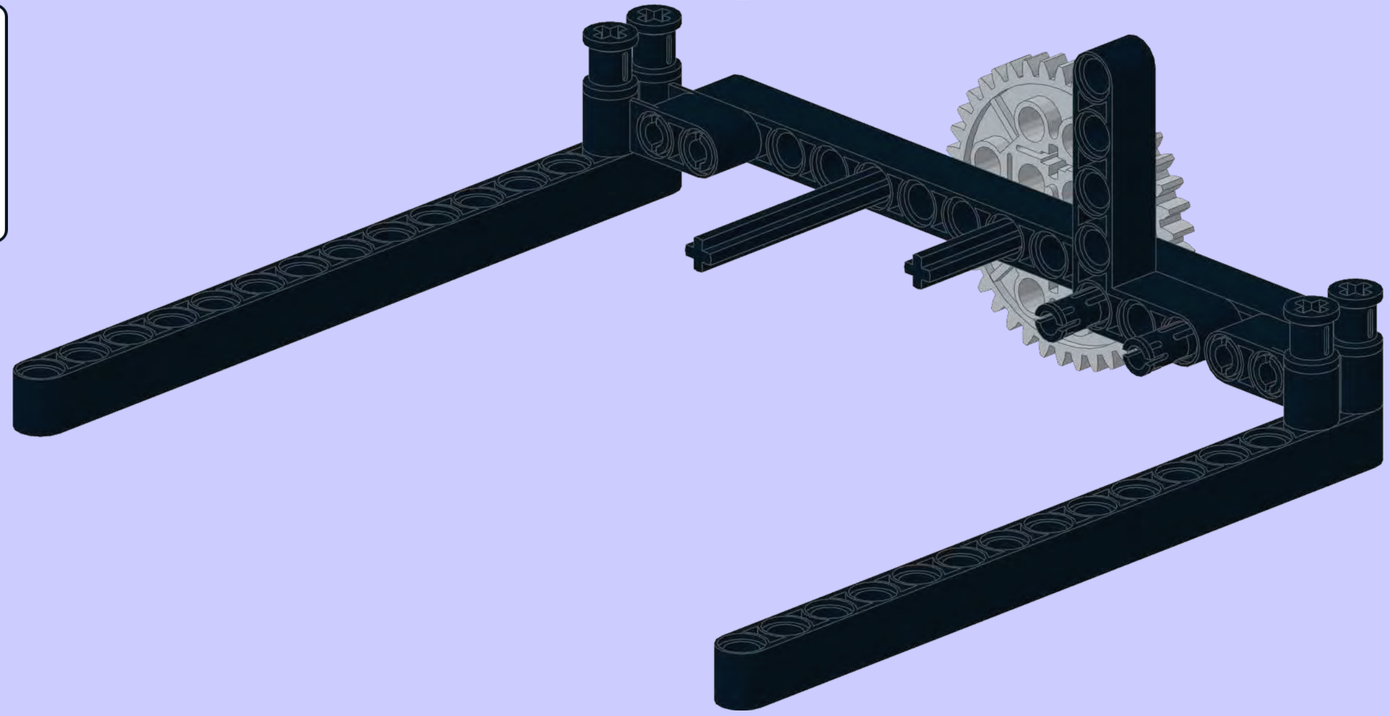

**5**

12T

**1x**

36T

**1x**

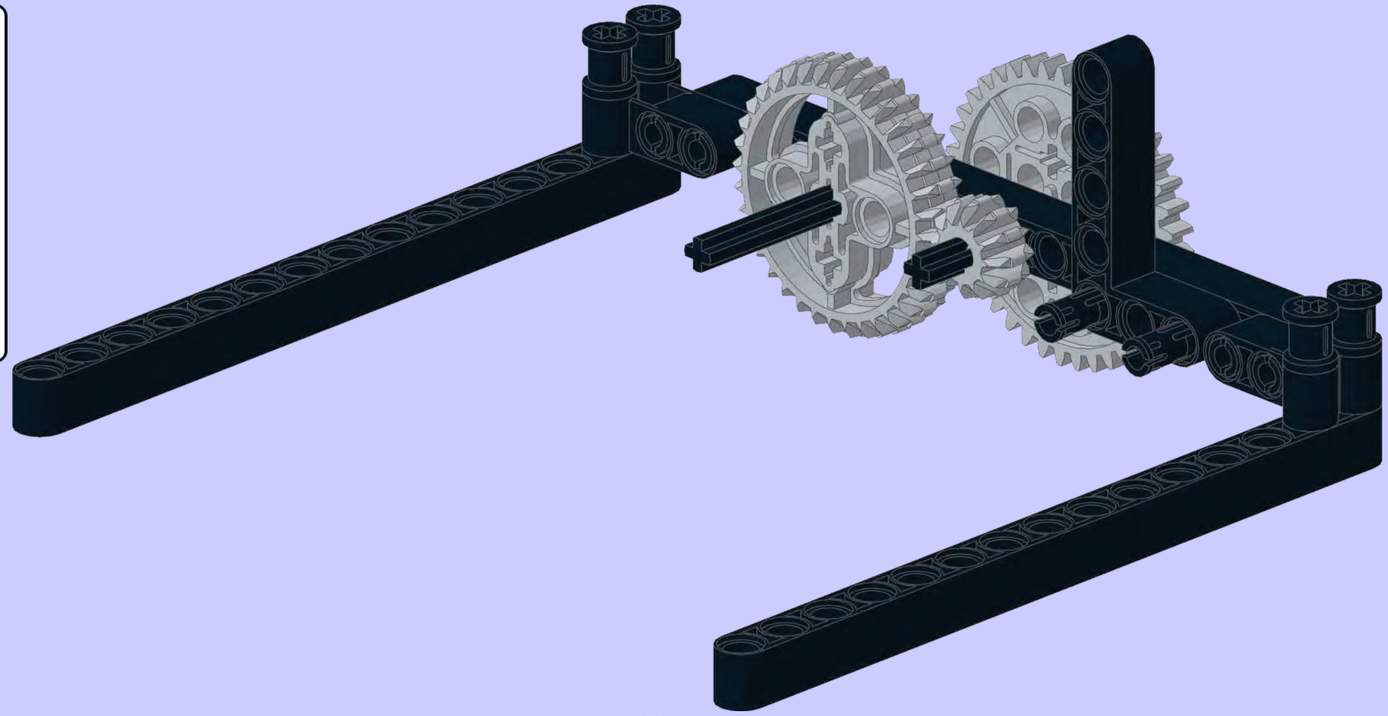

**6**

**4x**

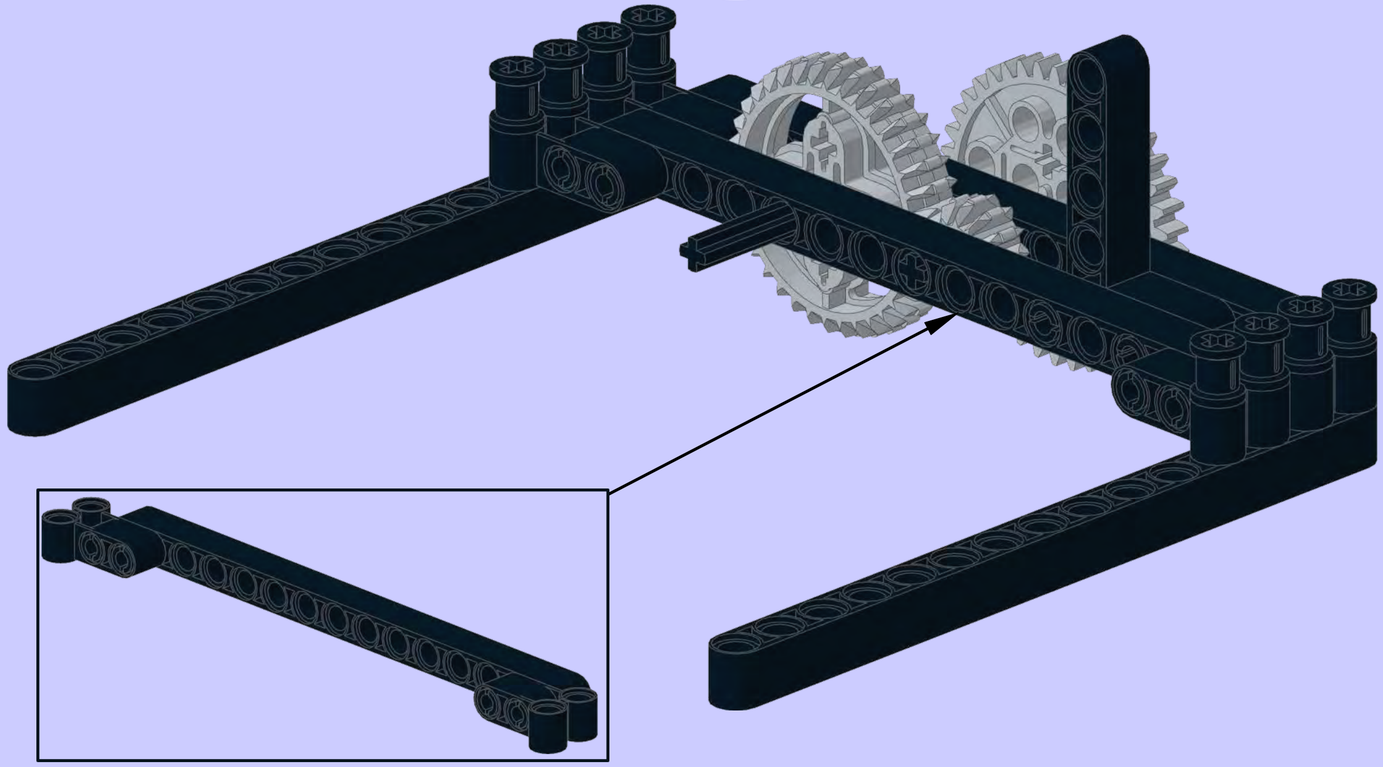

**7**

2x

1x

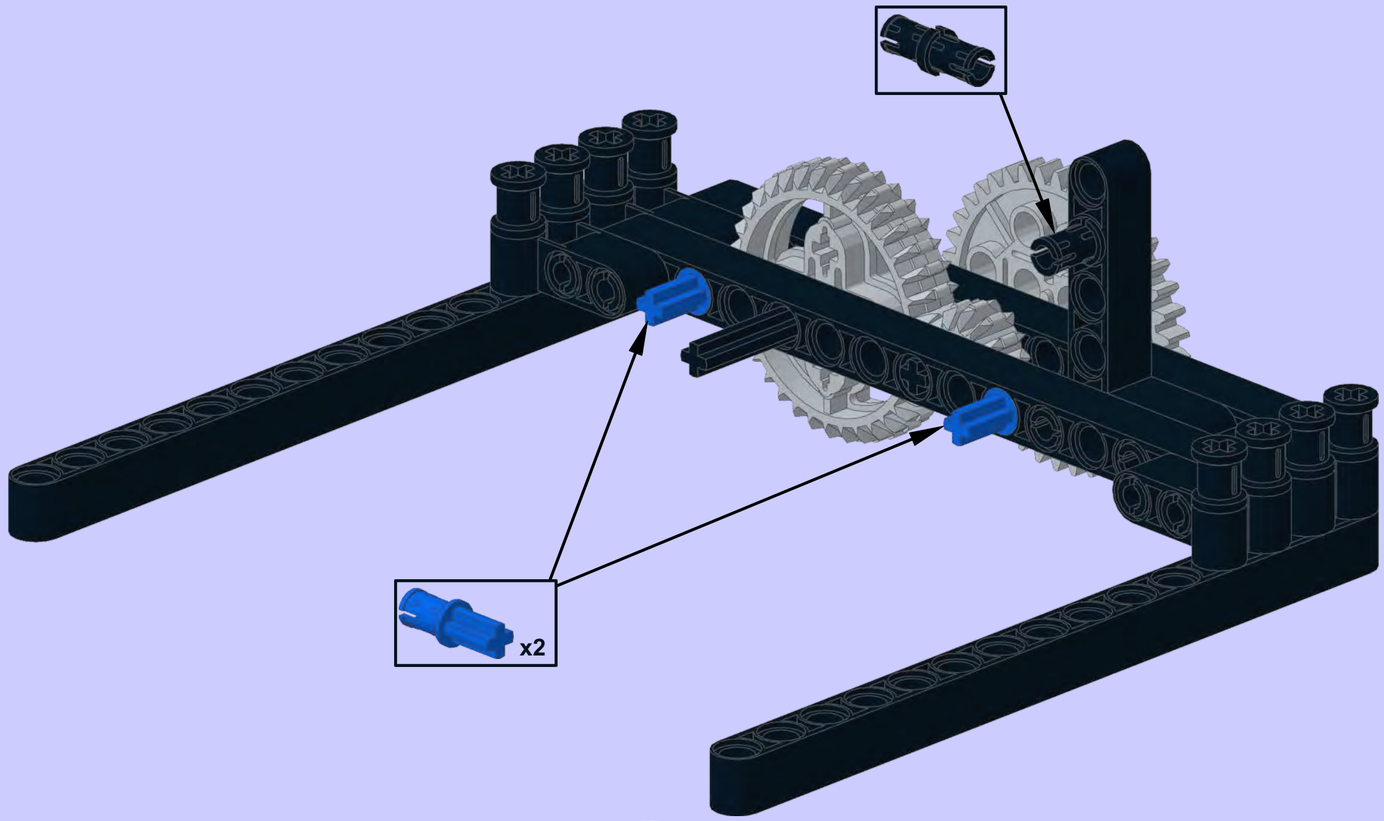


**8**

12T

2x

1x

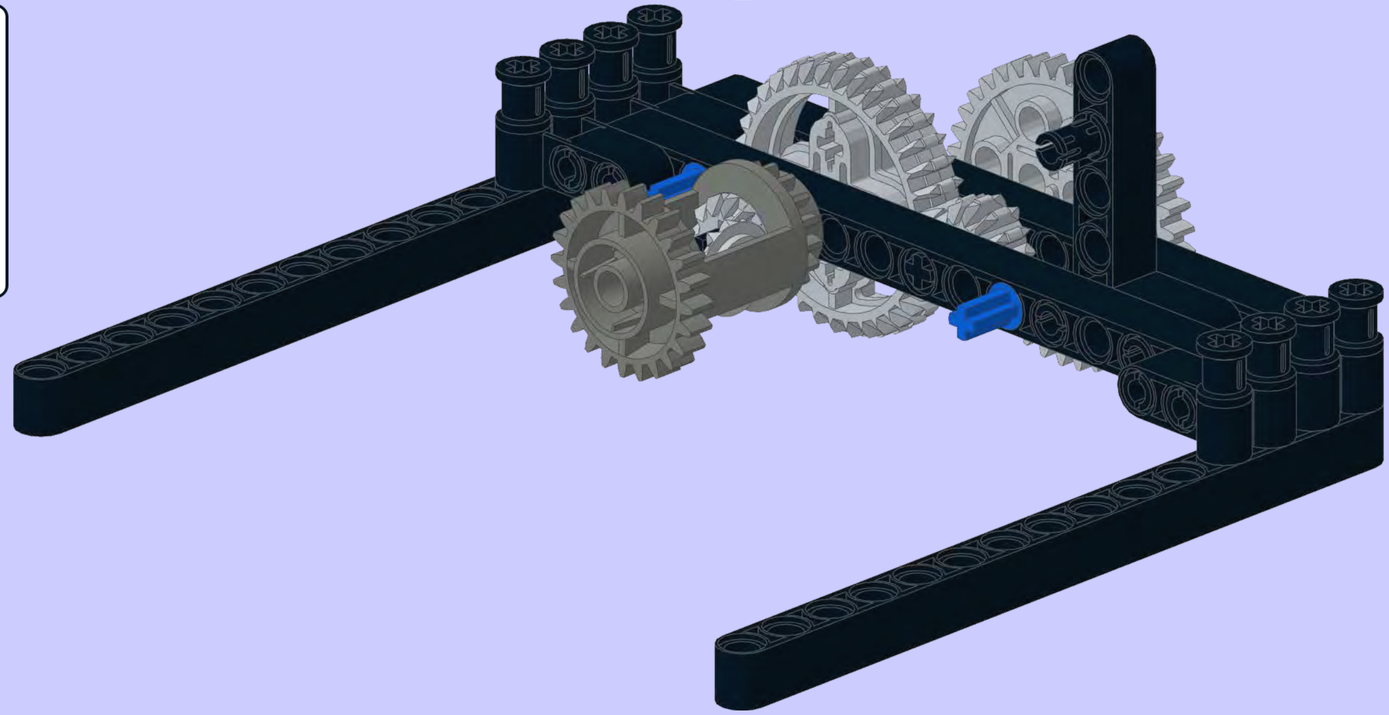

**9**

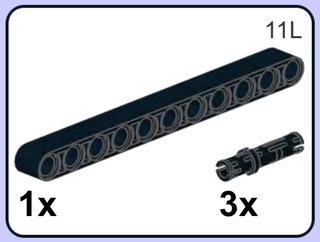


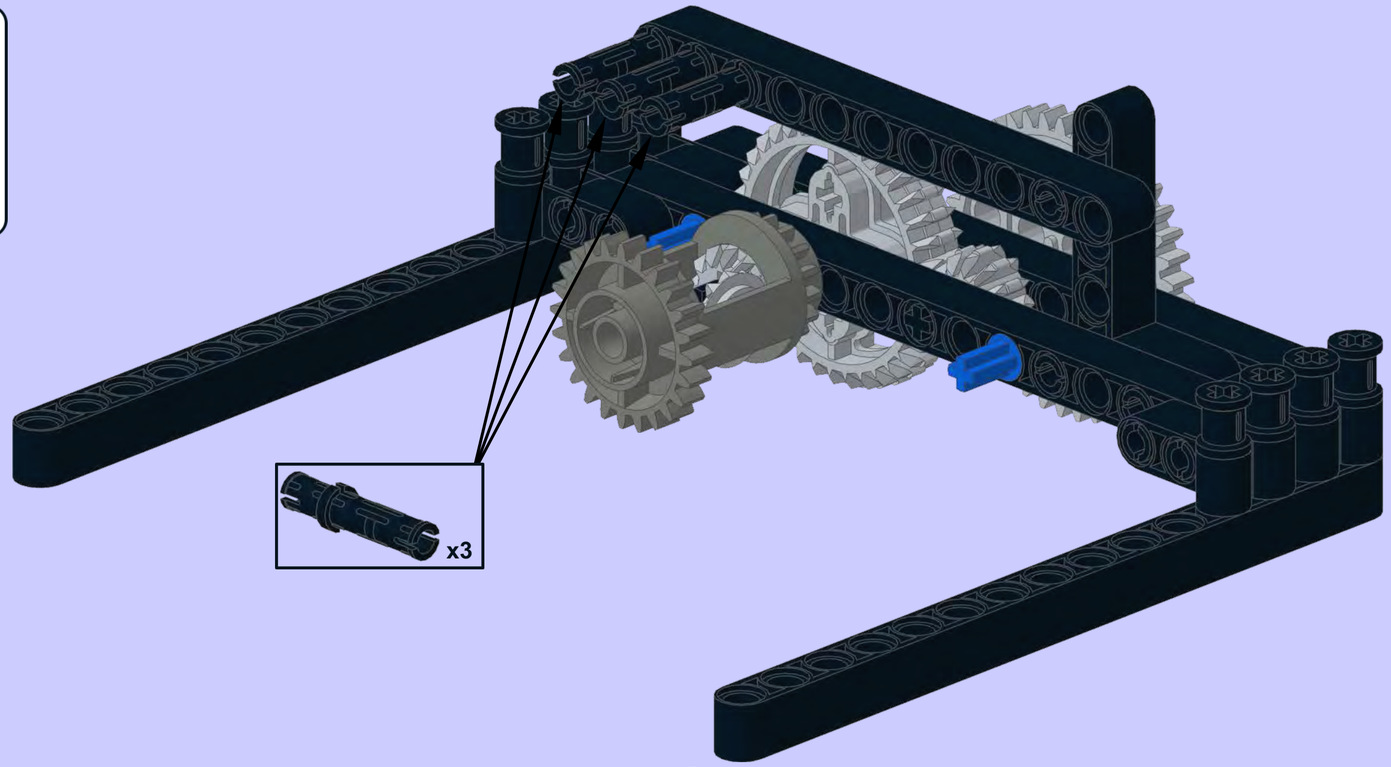


**10**

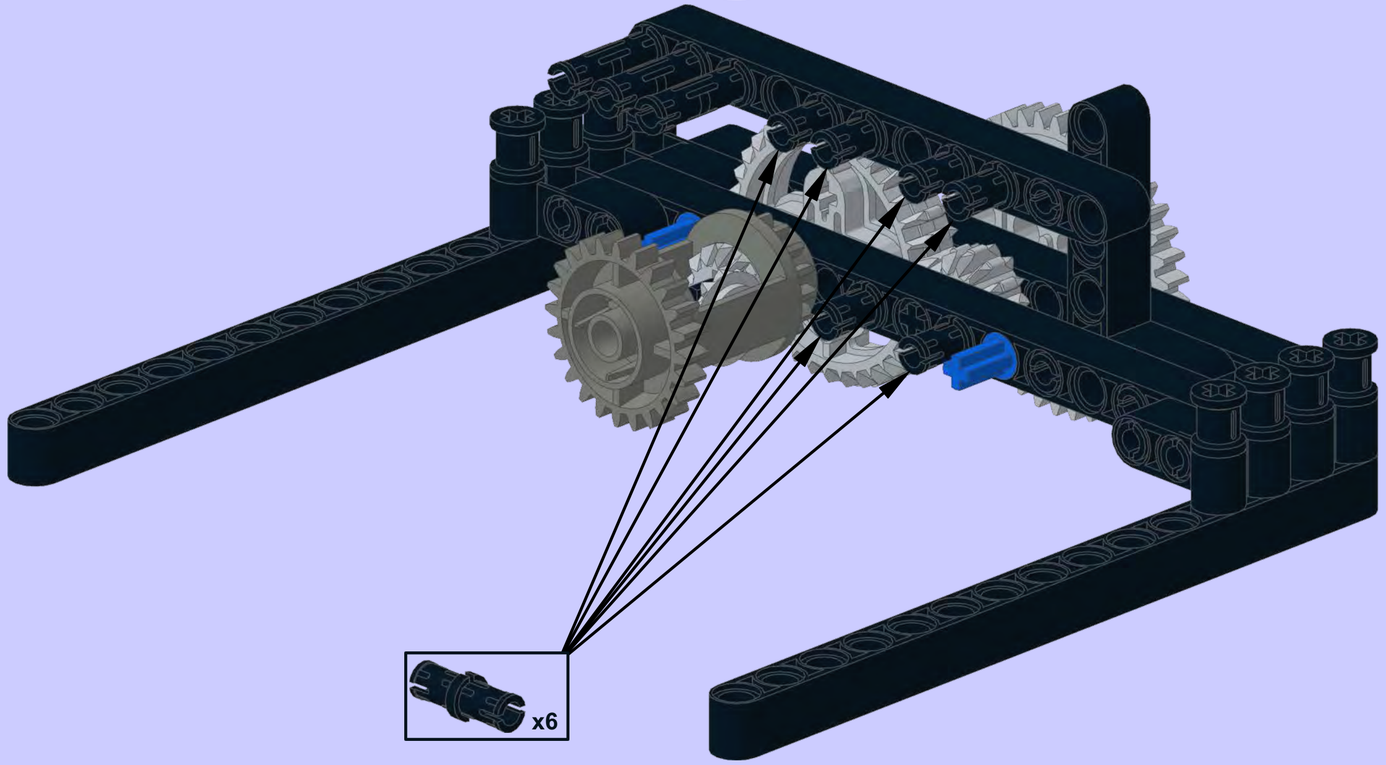

**11**

3L

**1x**

2x4

**2x**

3x5

**1x**

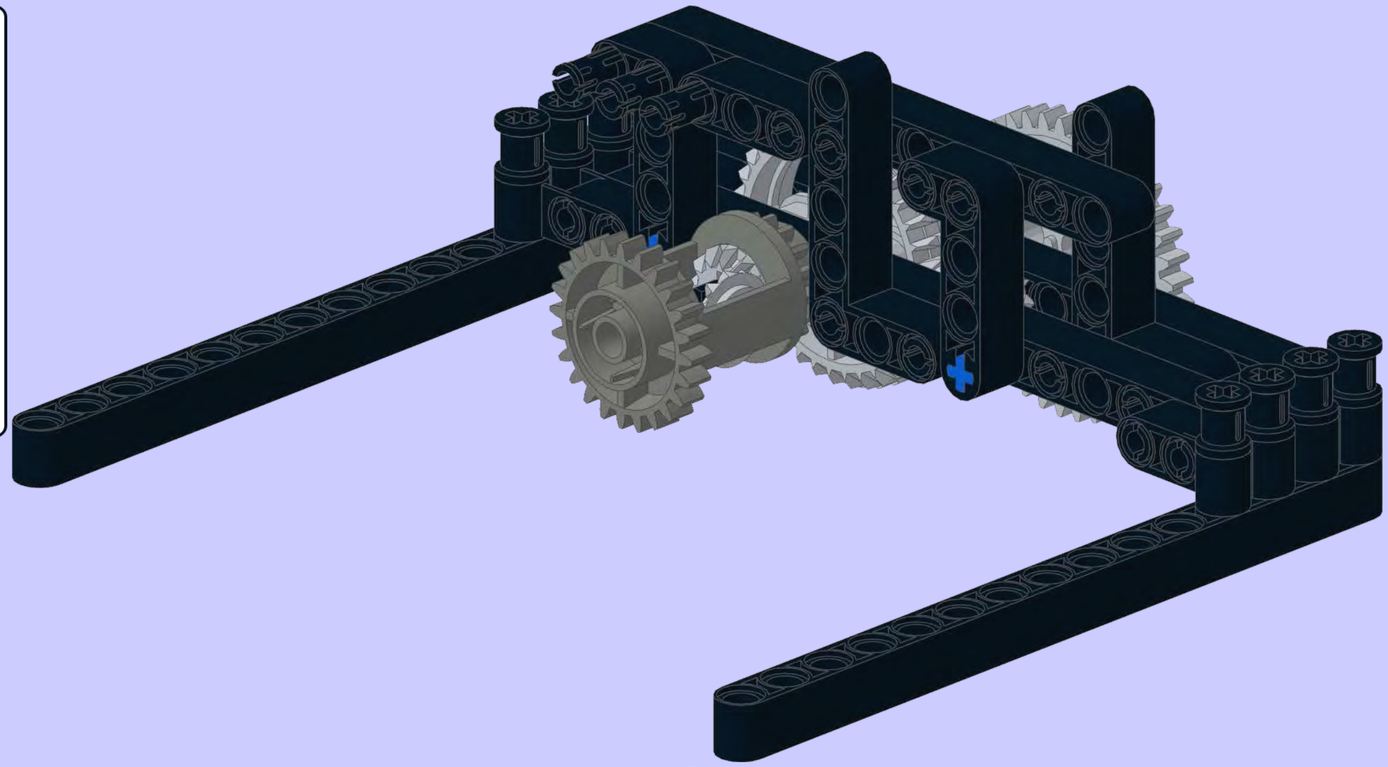

**12**

2x4

**1x**

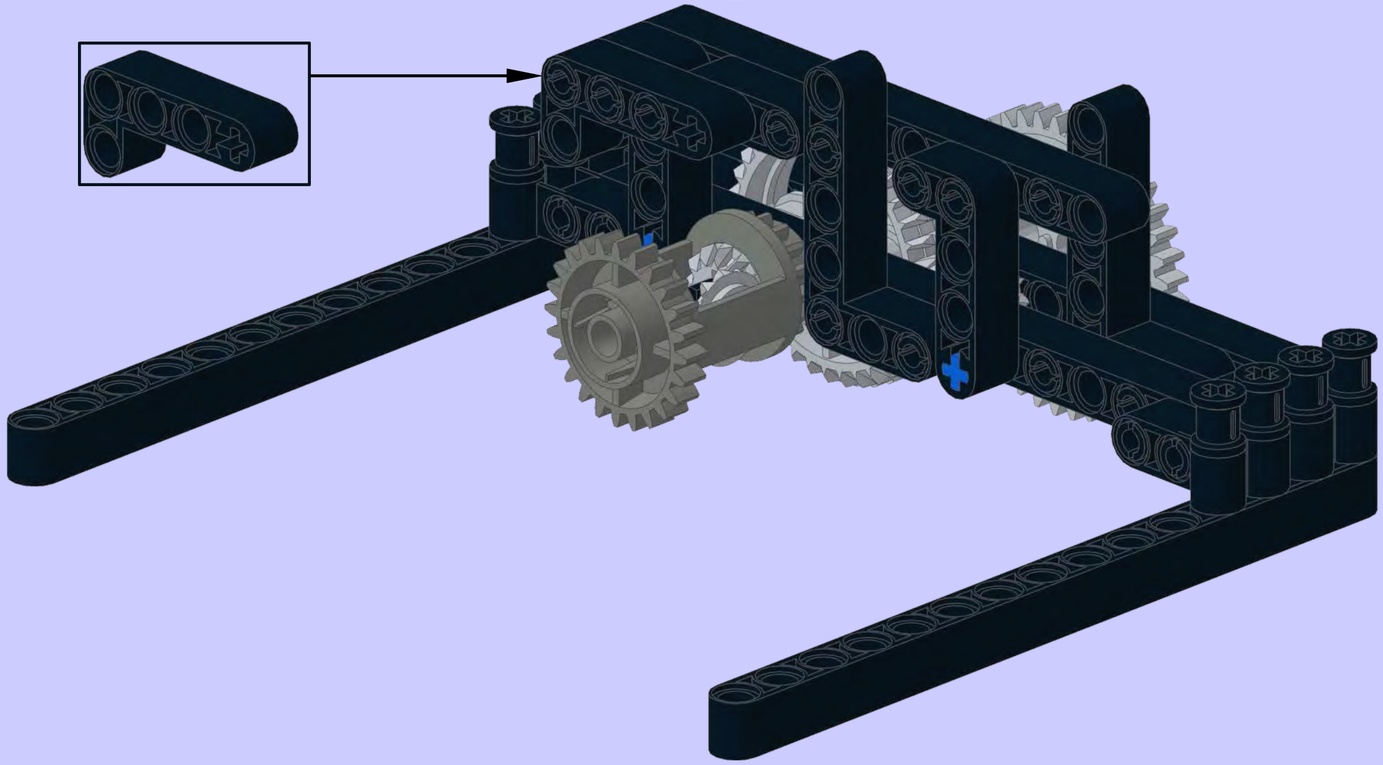

13

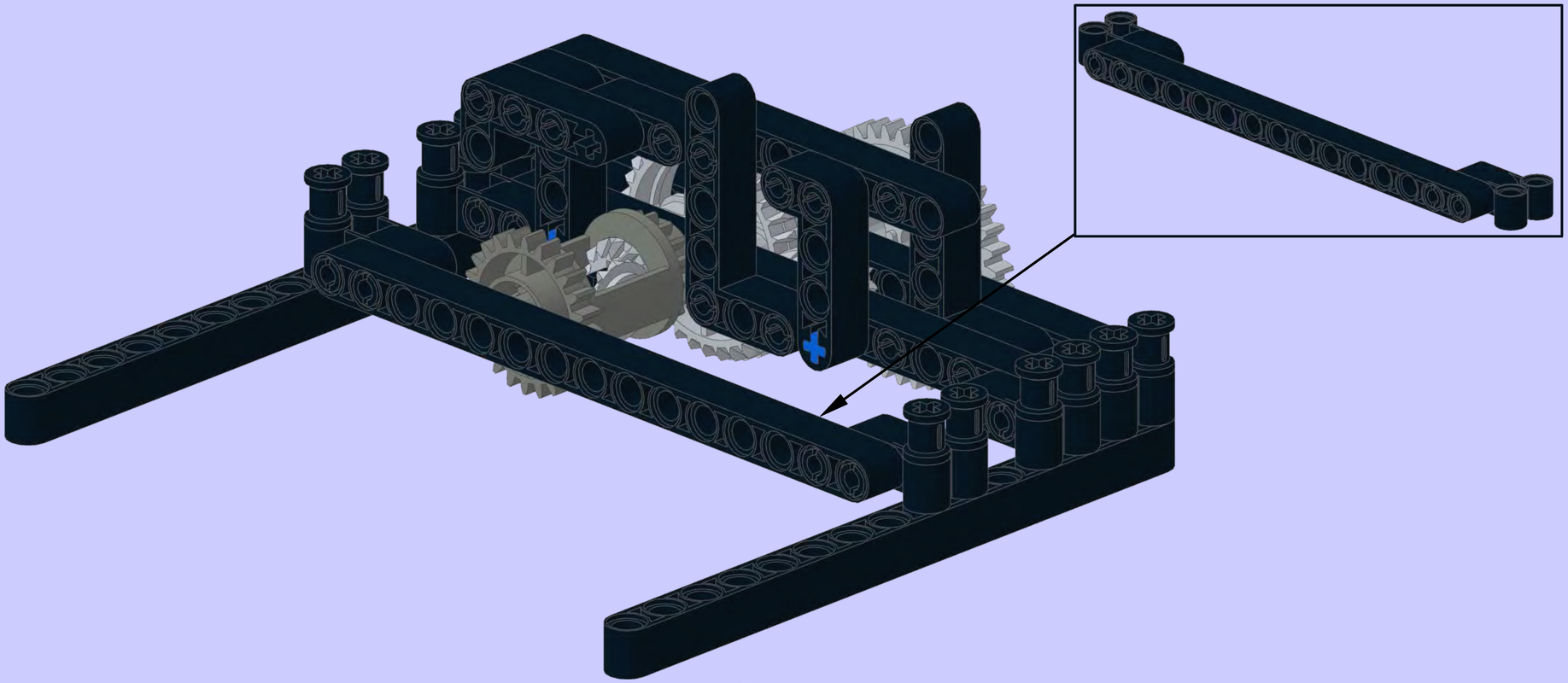

14

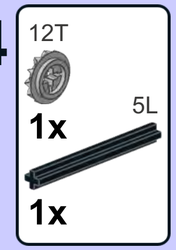


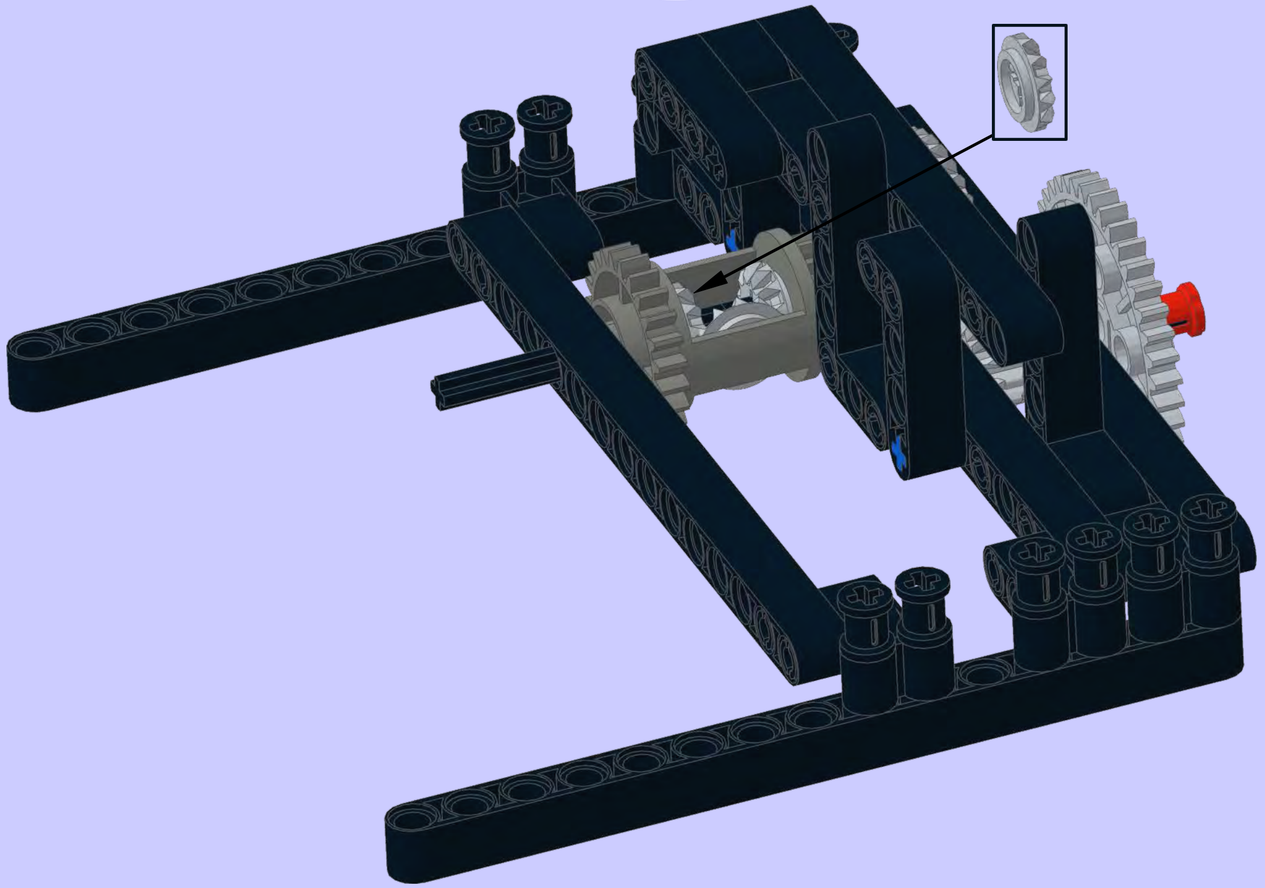

**15**

**16**

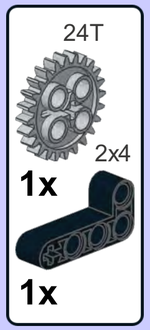


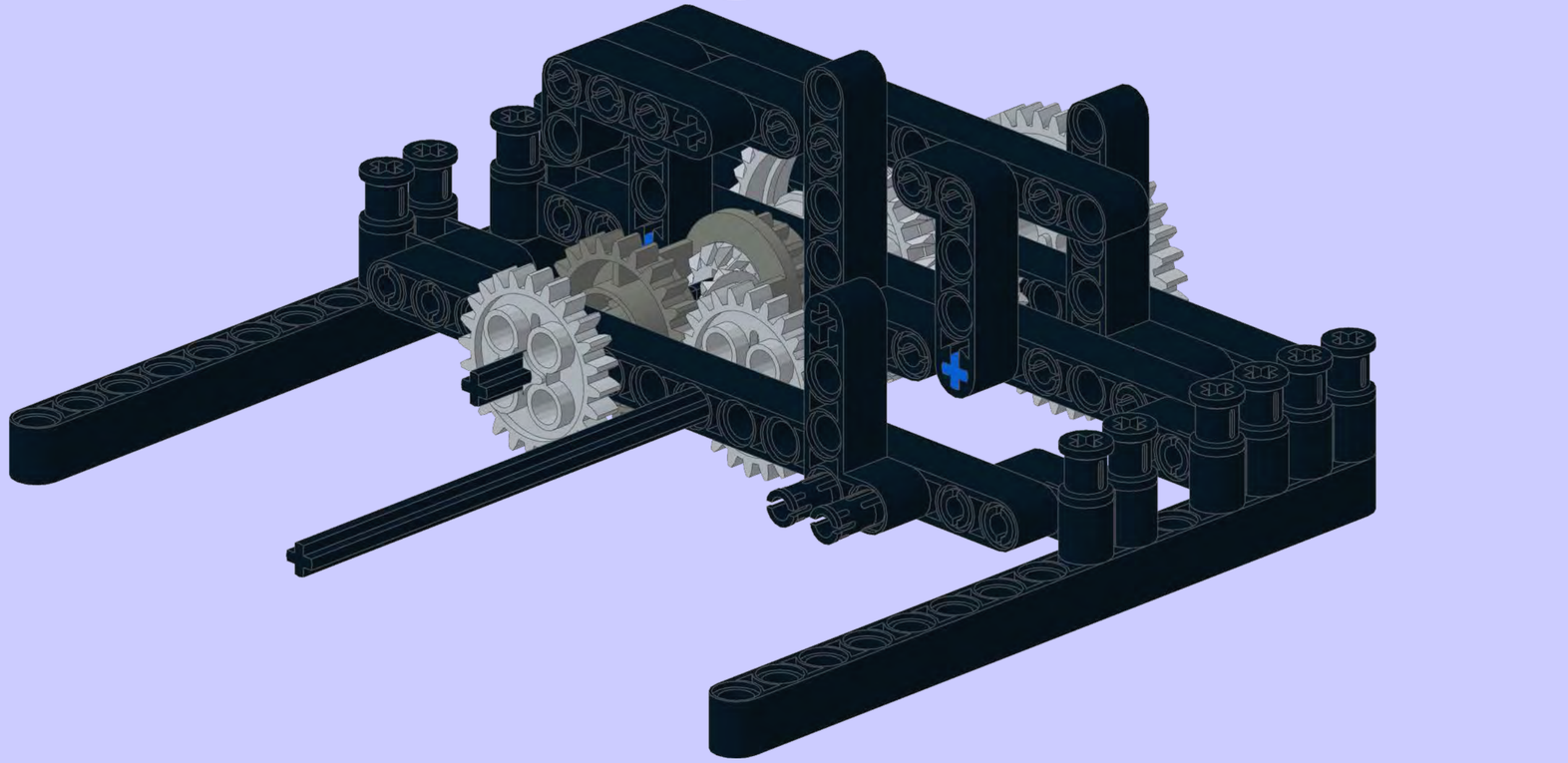

17

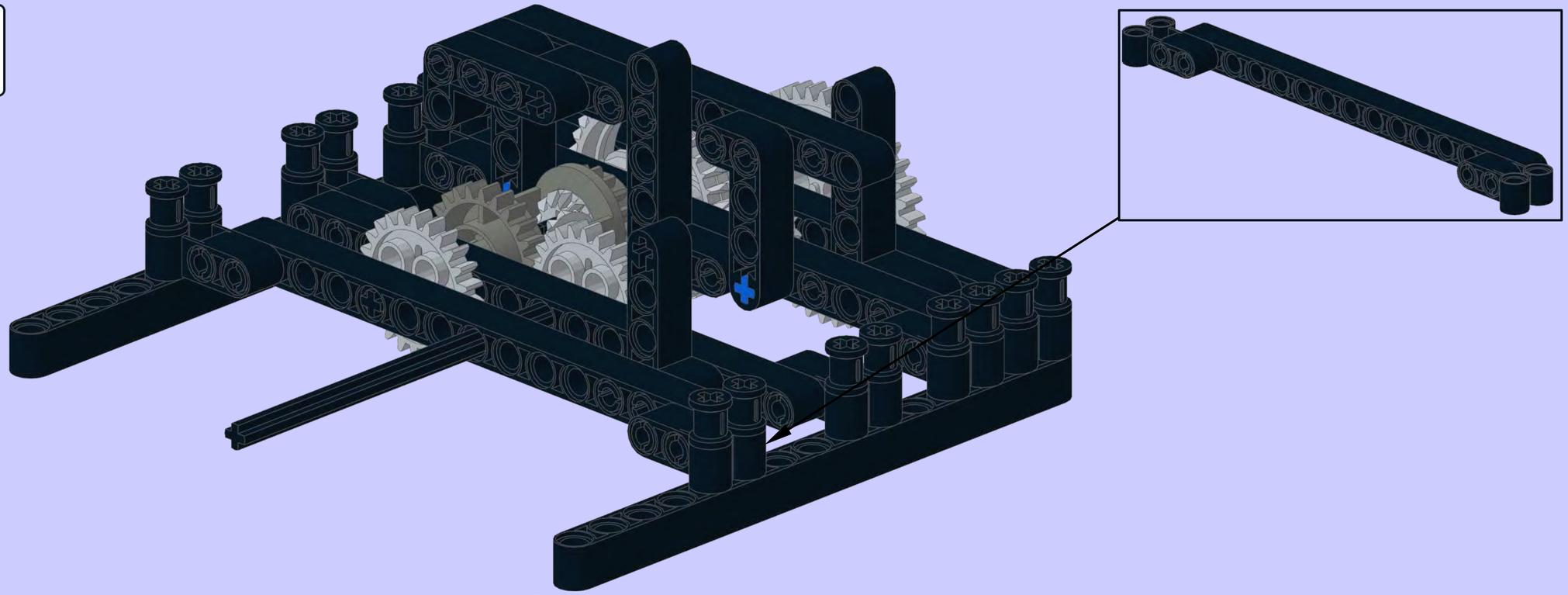

18

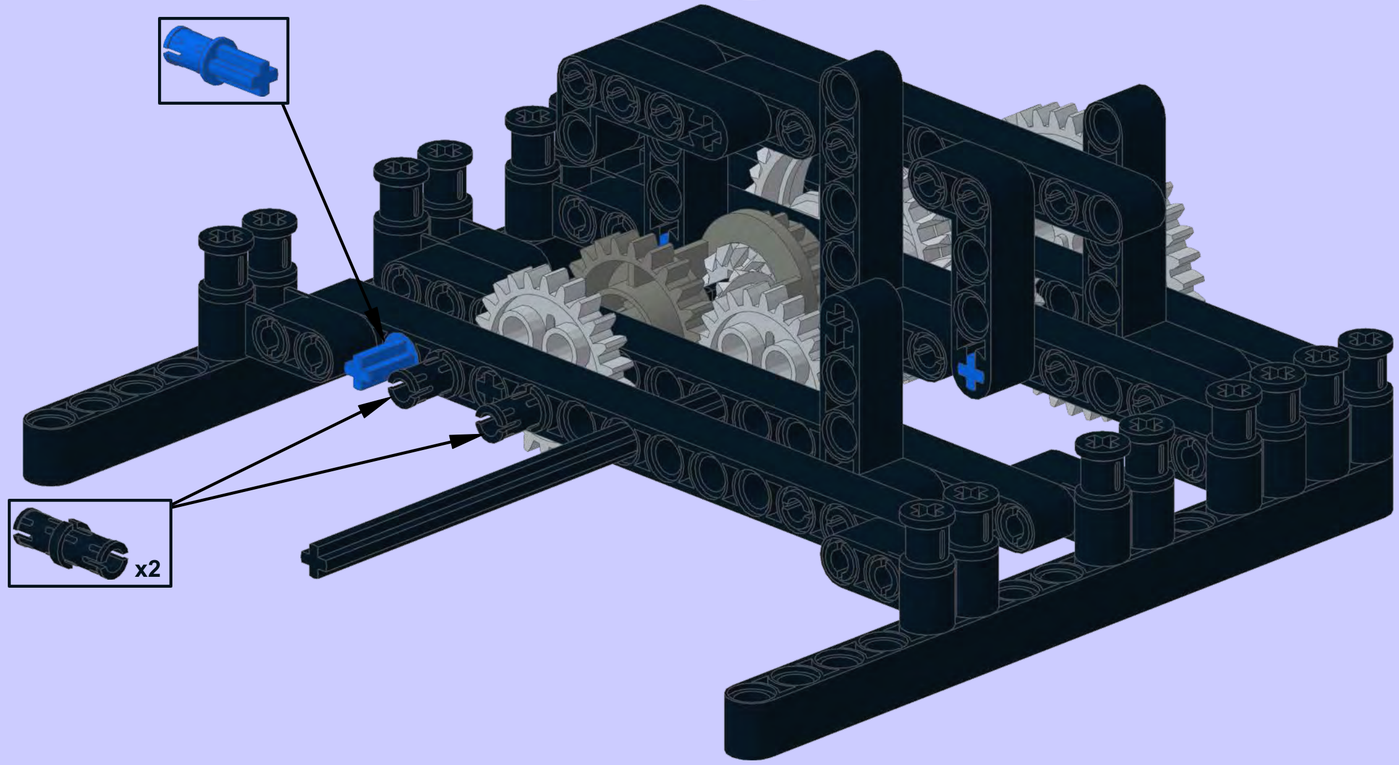

**19**

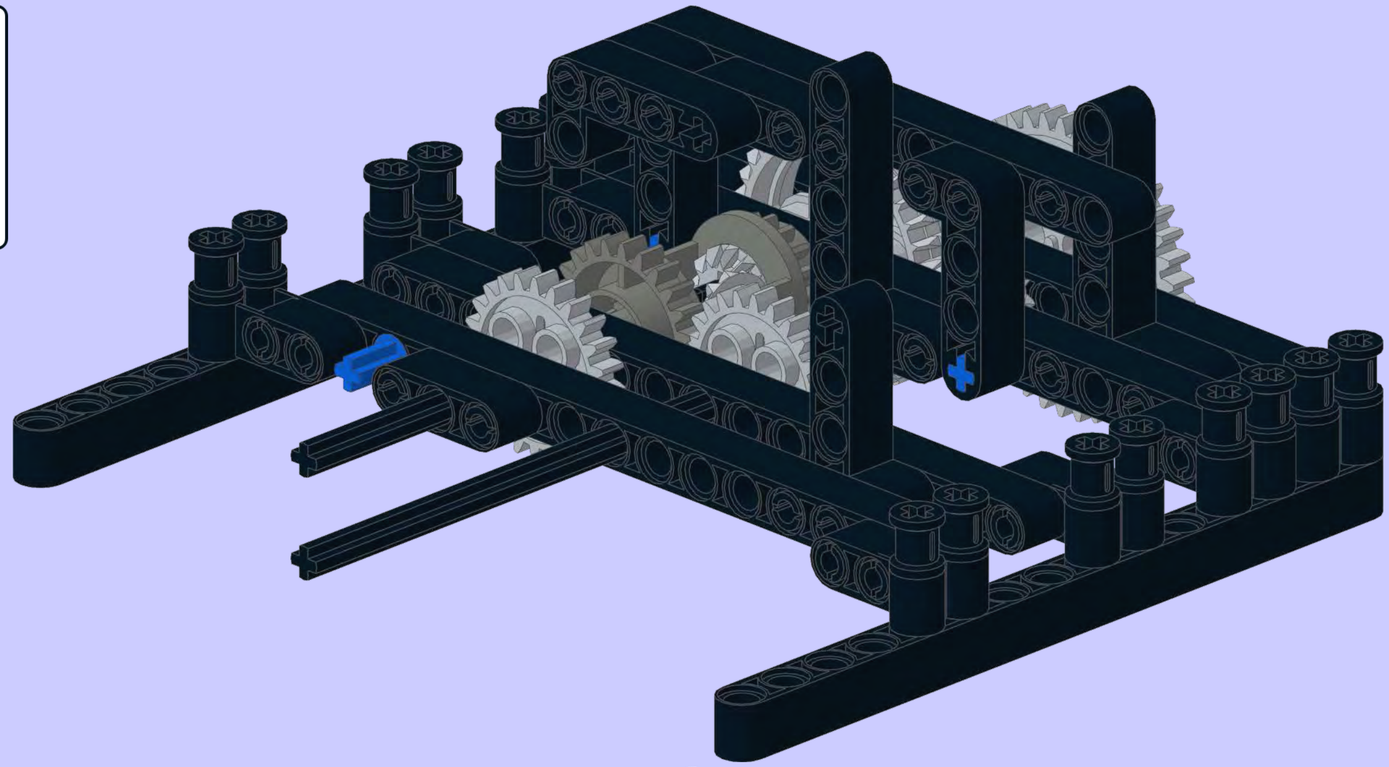

**20**

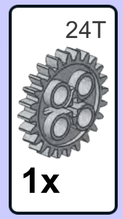


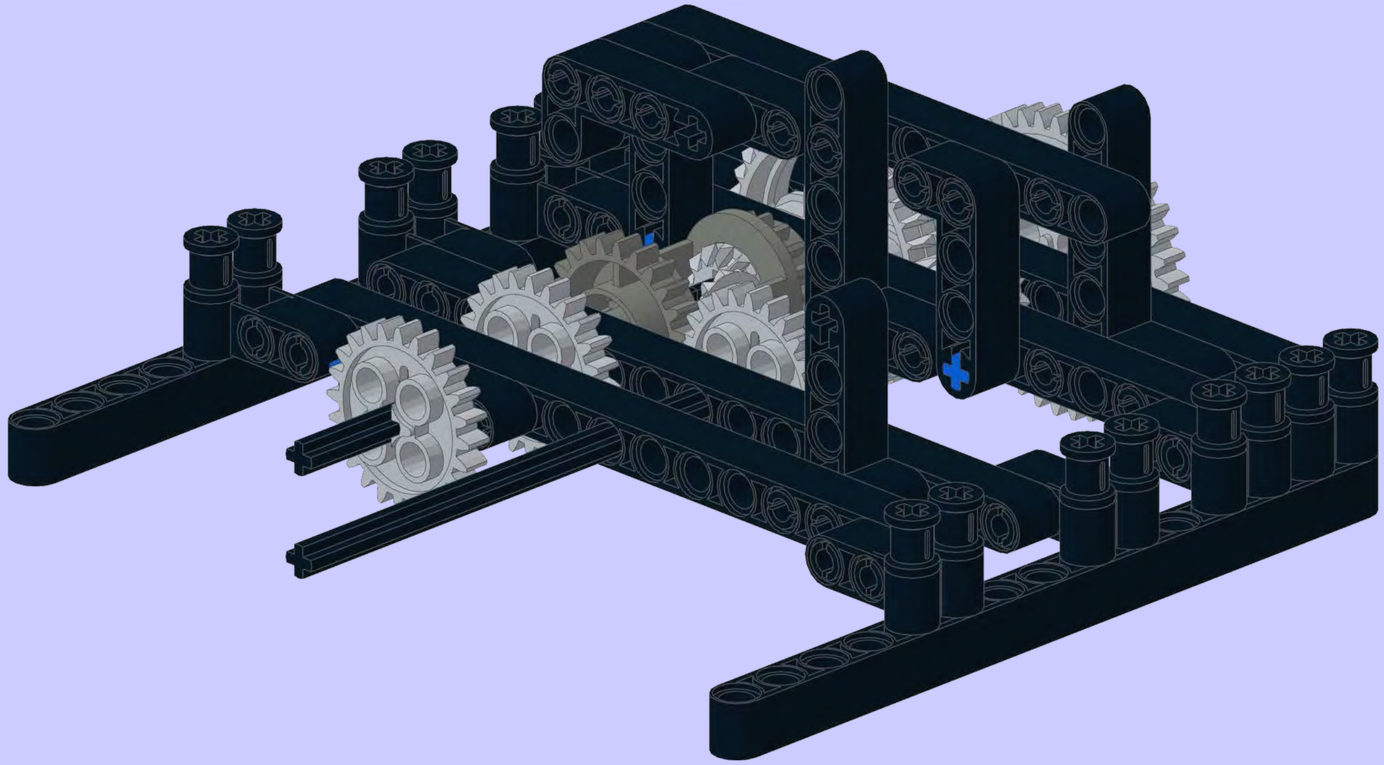

**21**

8T

**1x**

40T

**1x**

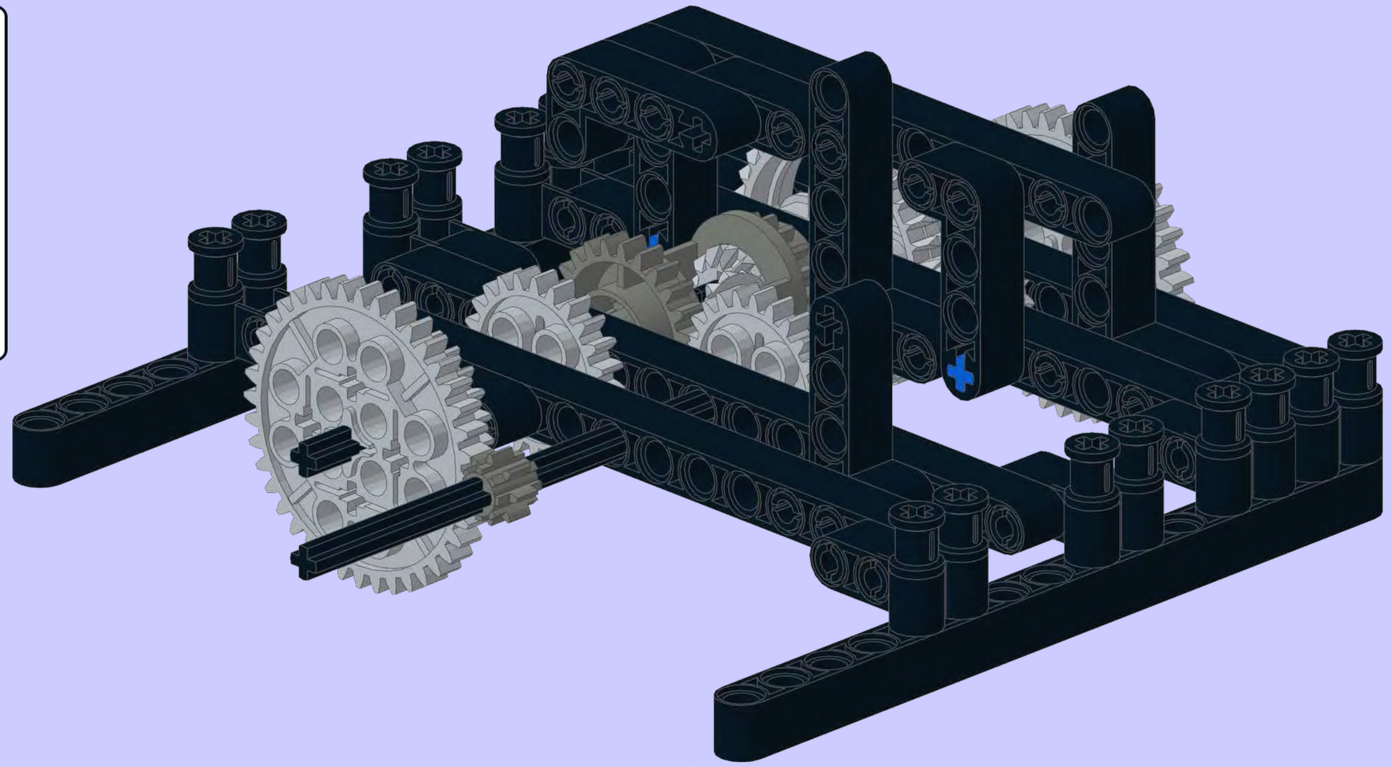

**22**

**4x**

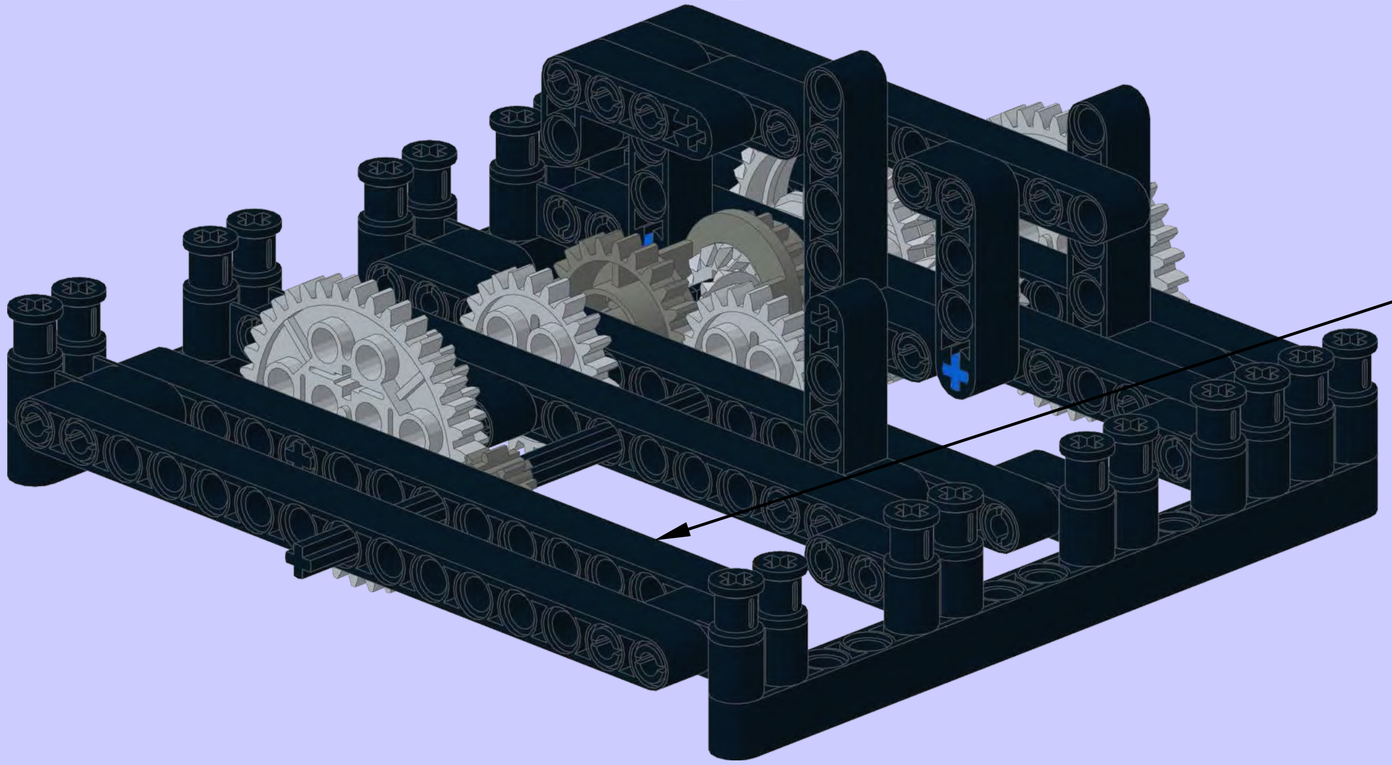

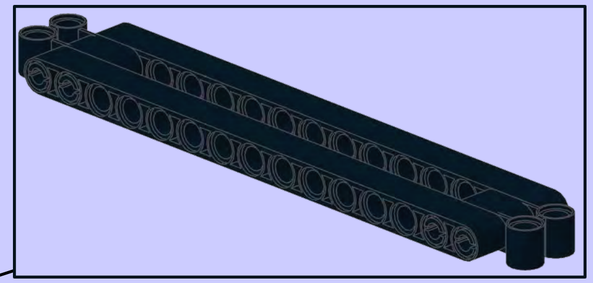

**23**

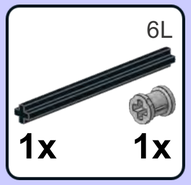


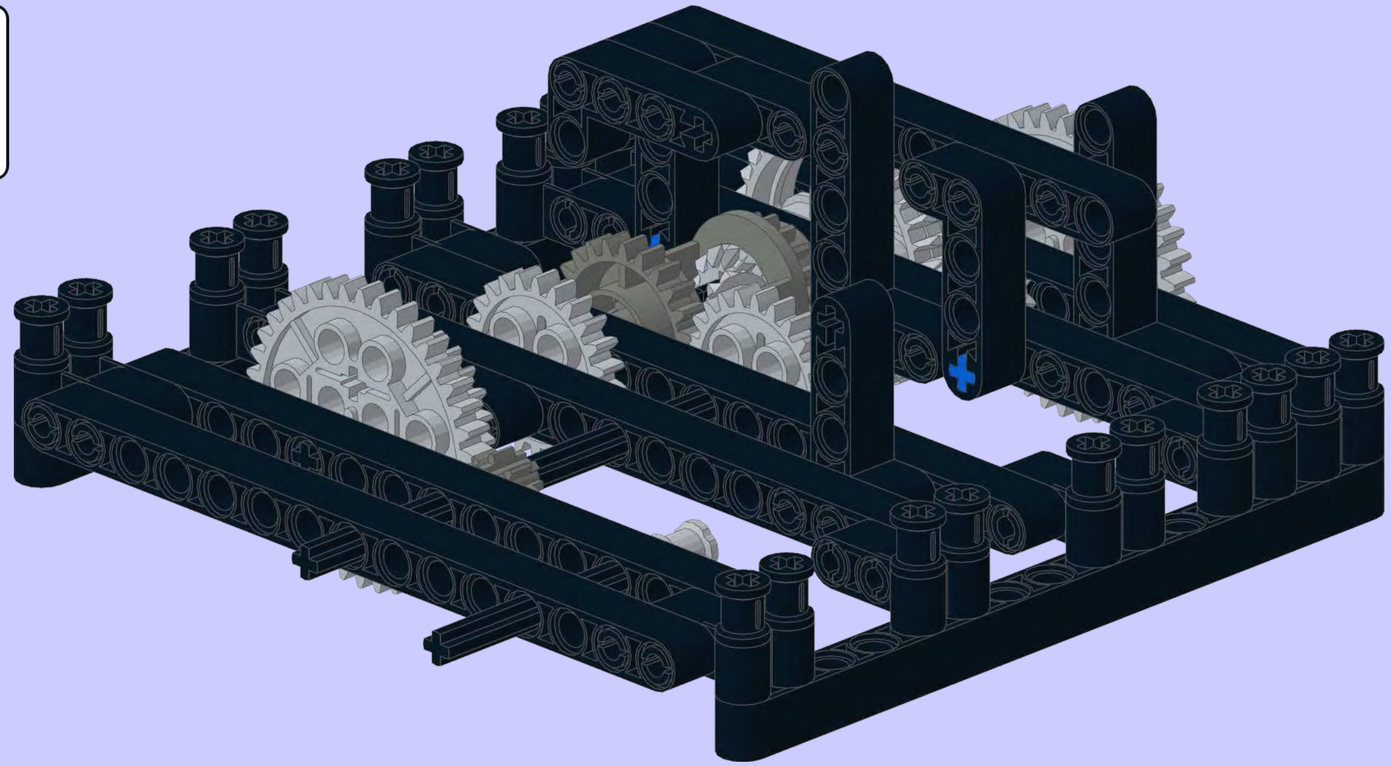

**24**

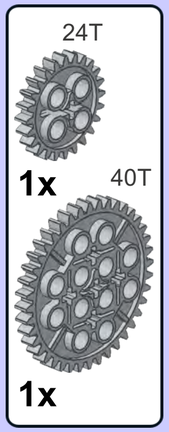


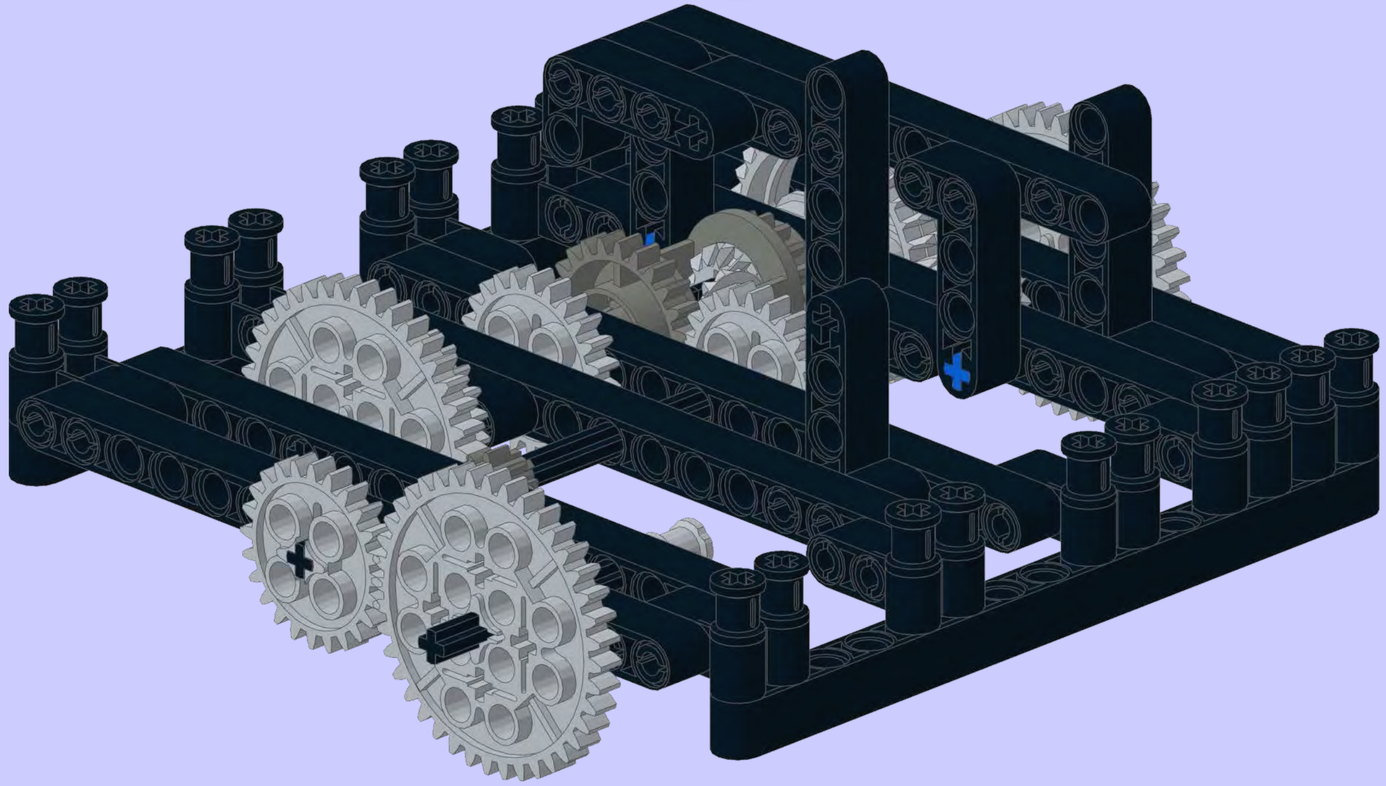

25

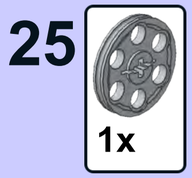


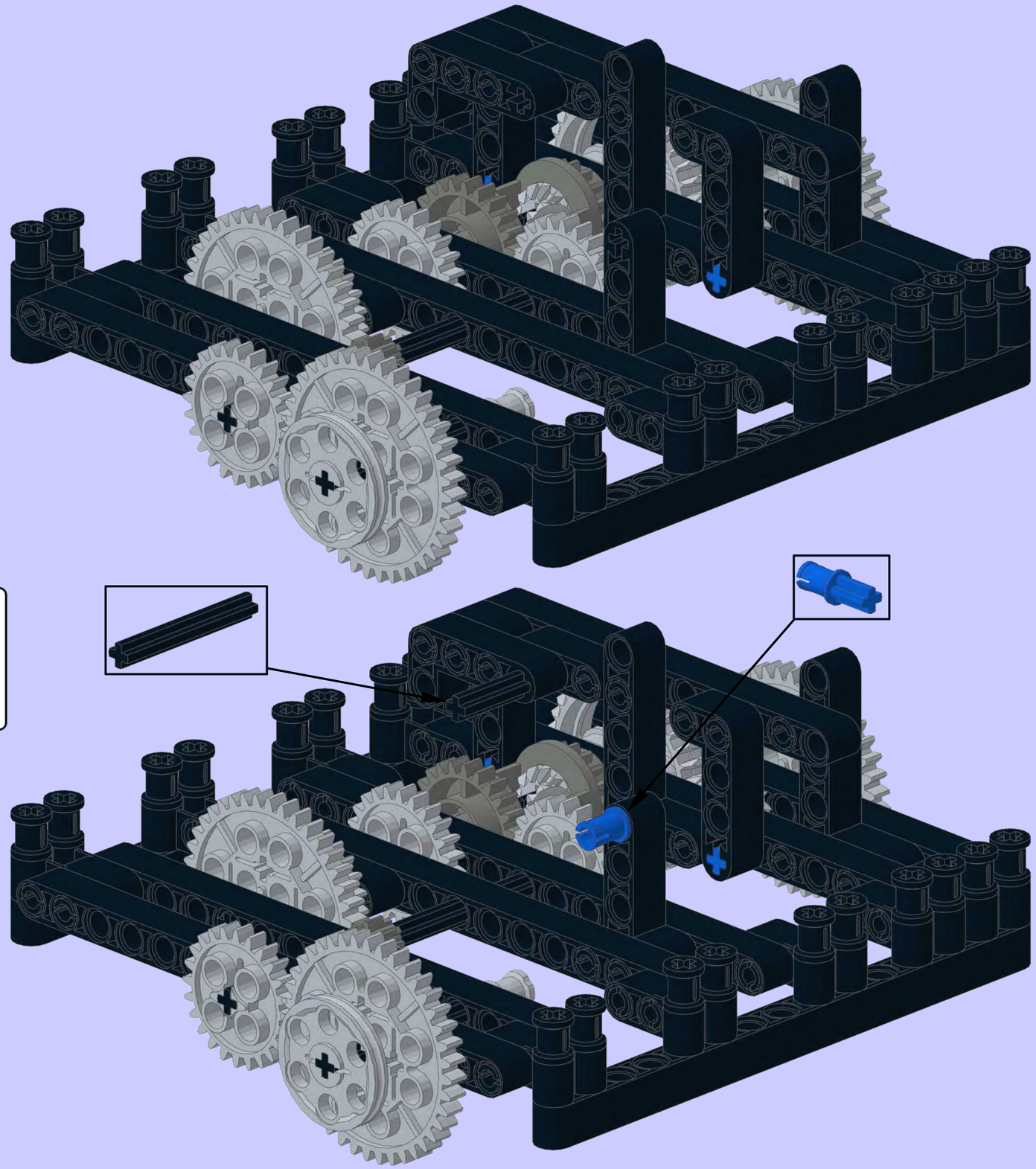

26

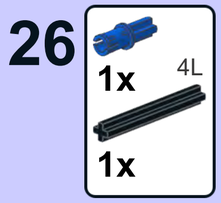

## 27

12T

**2x**

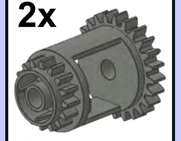

**1x**

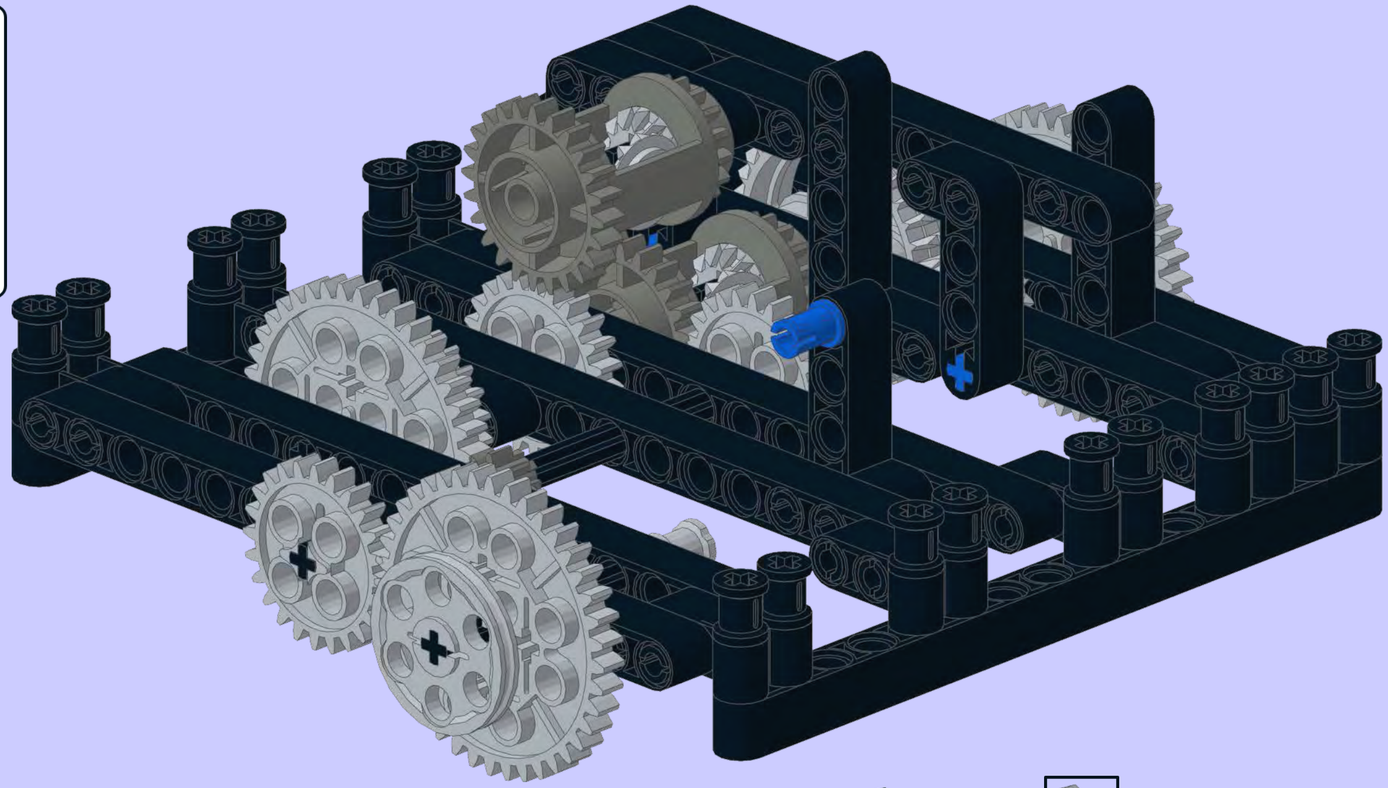

## 28

12T

**1x**

5L

**1x**

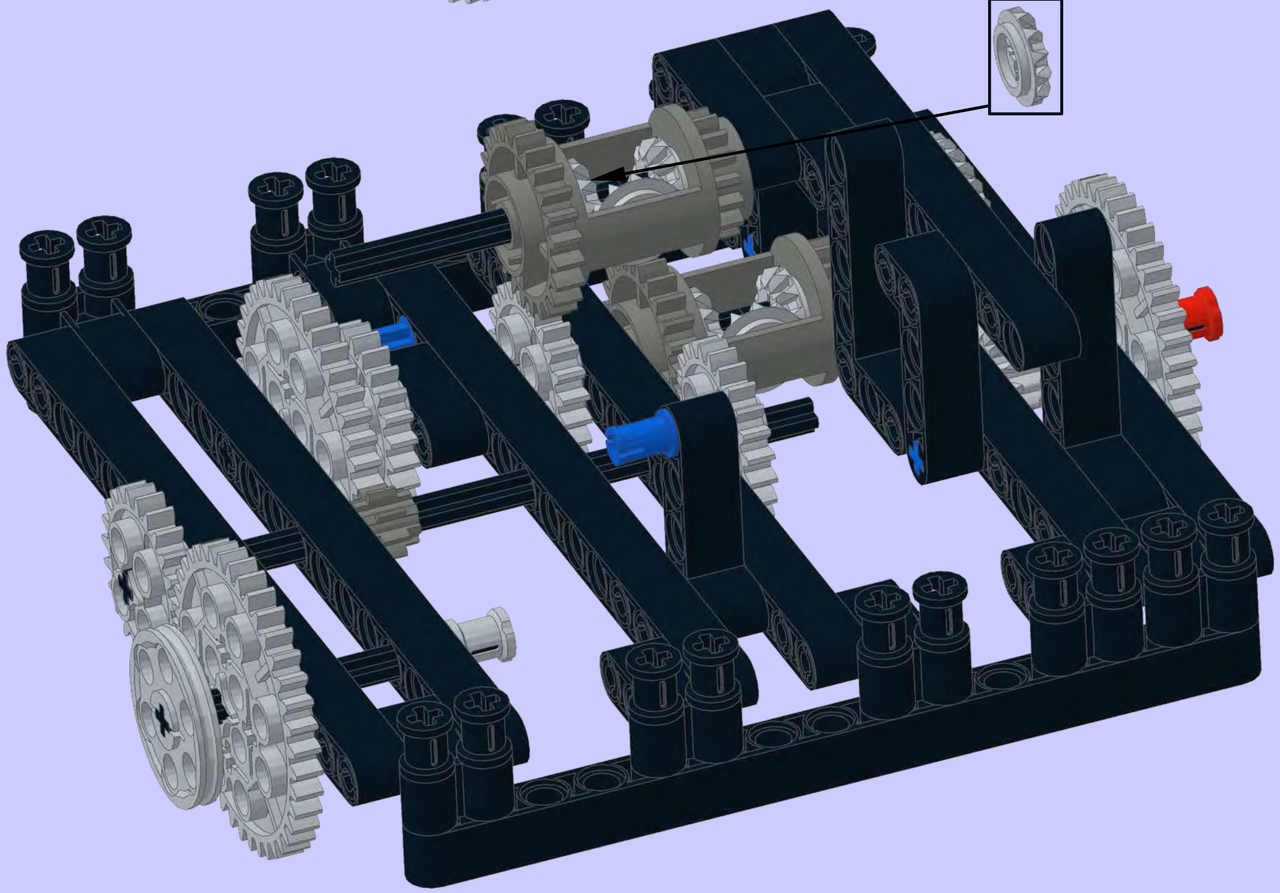

**29**

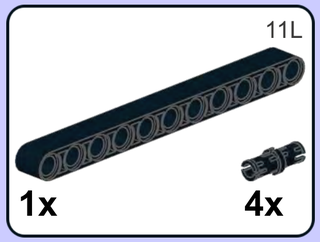


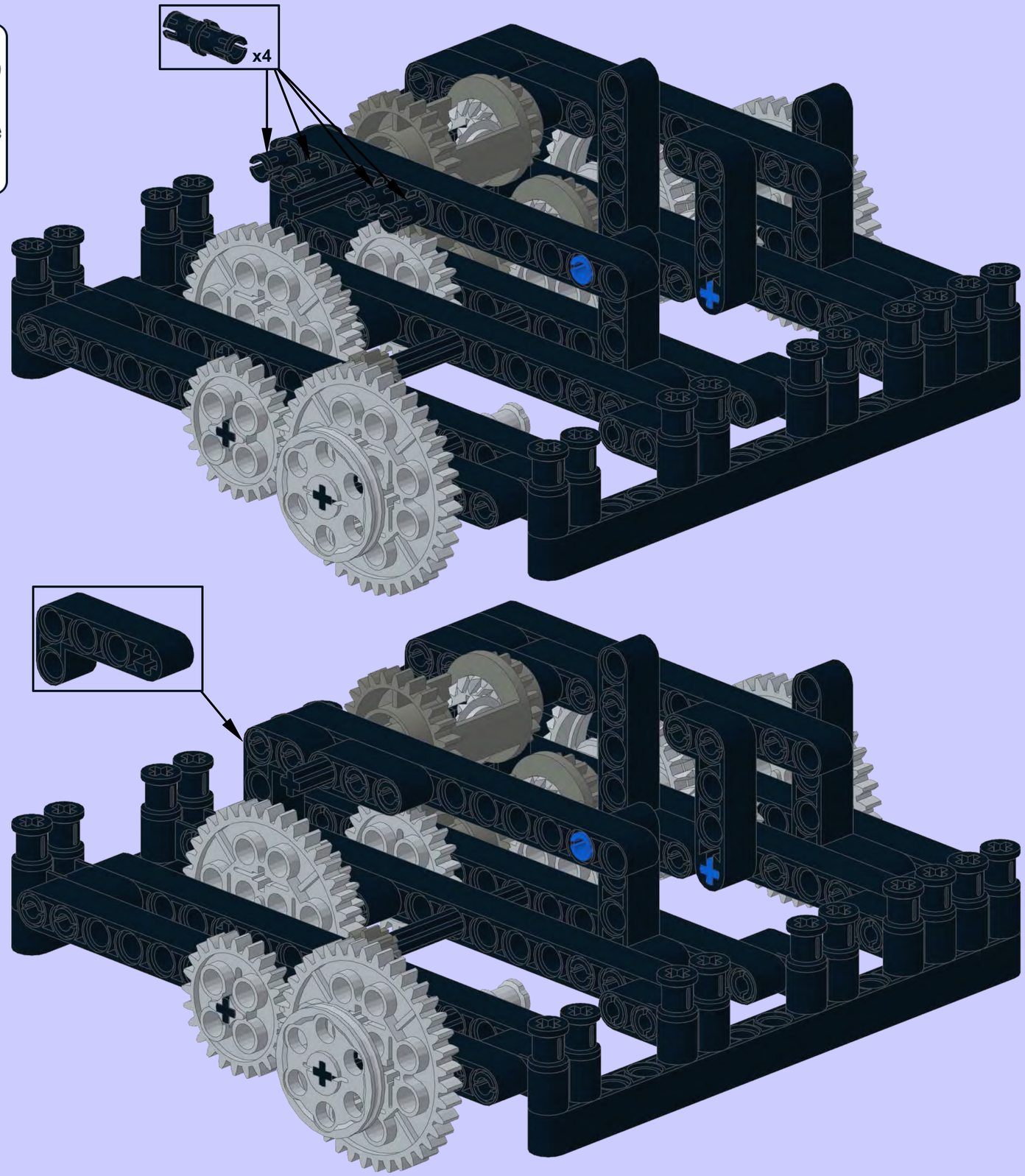


**30**

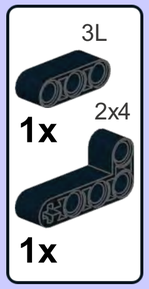

**31**

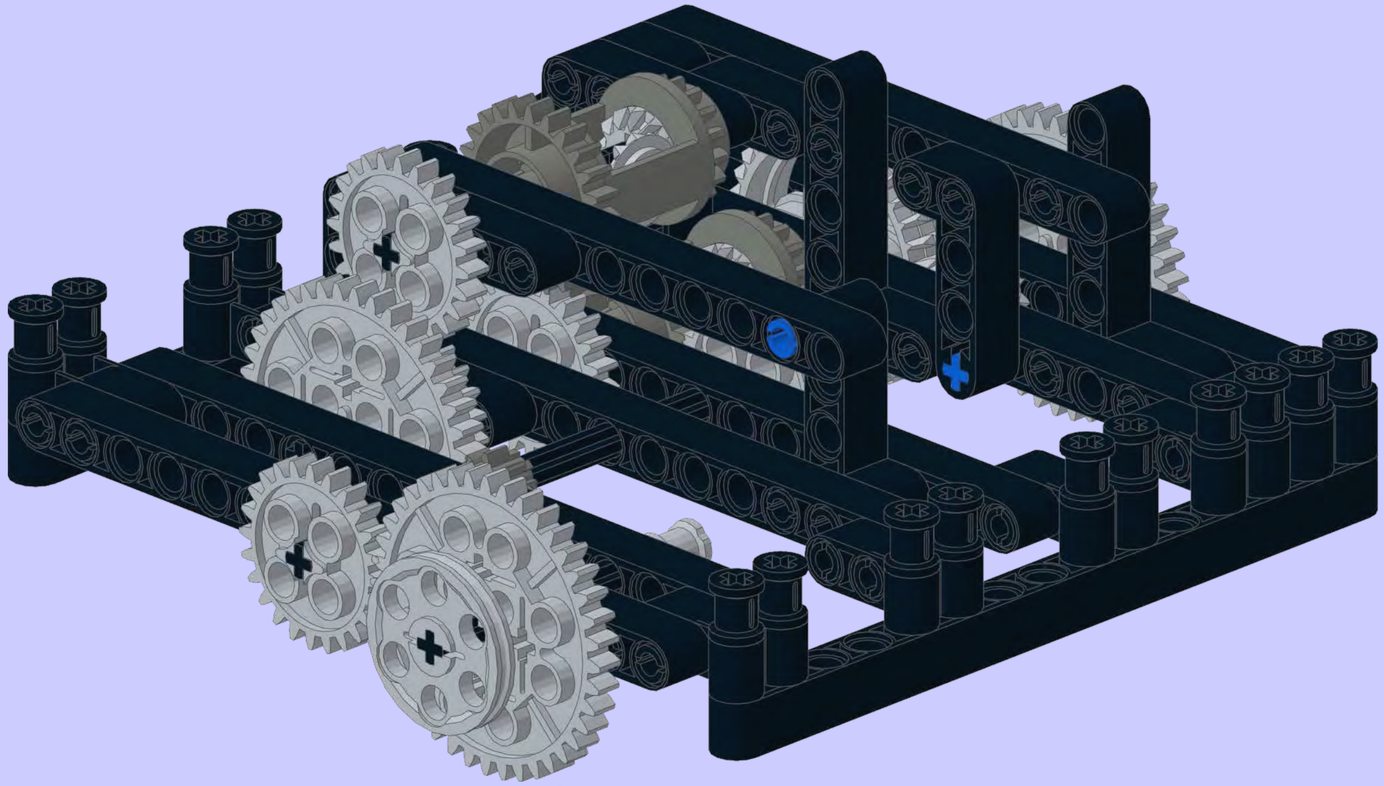

**32**

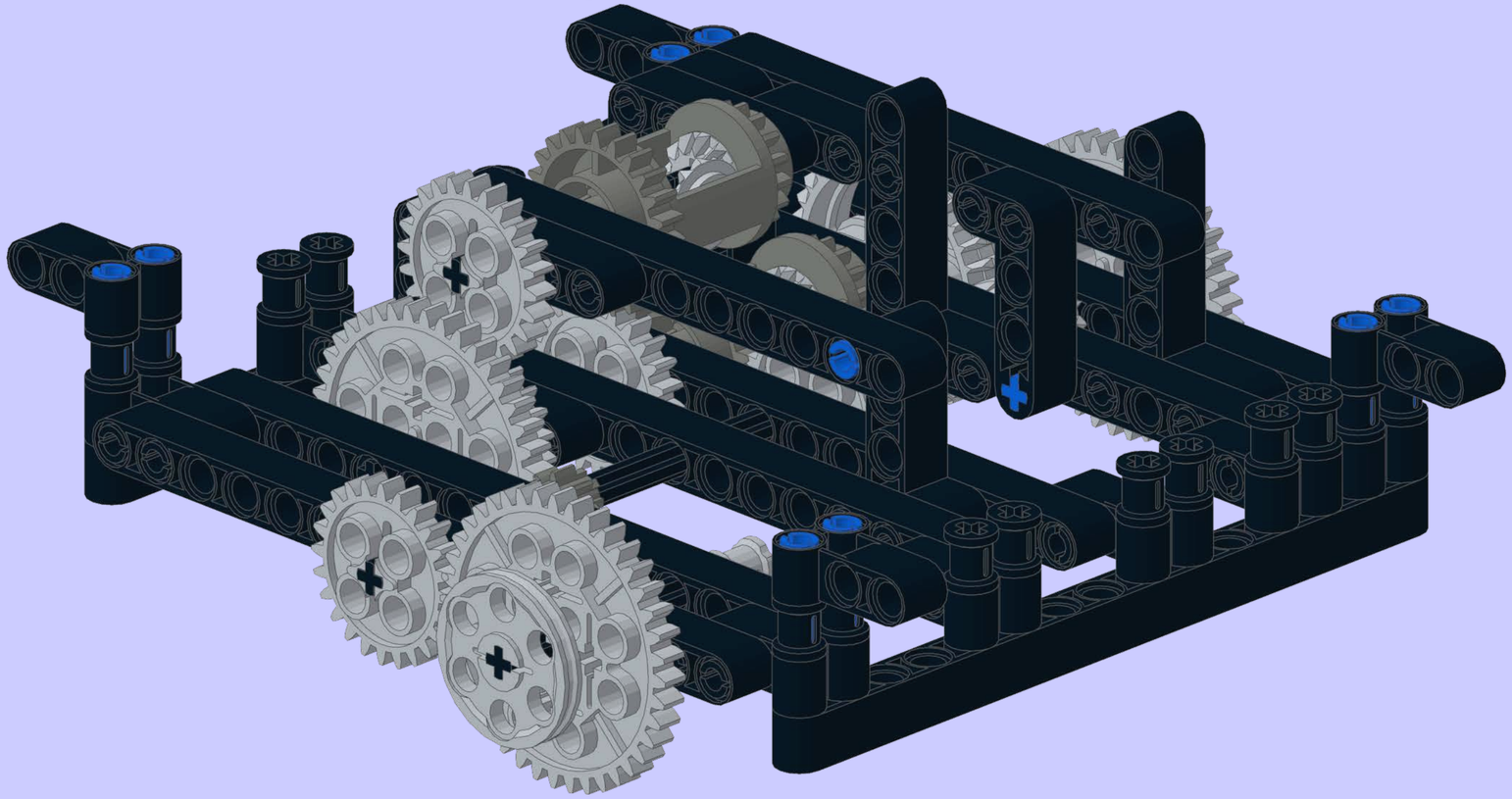

6

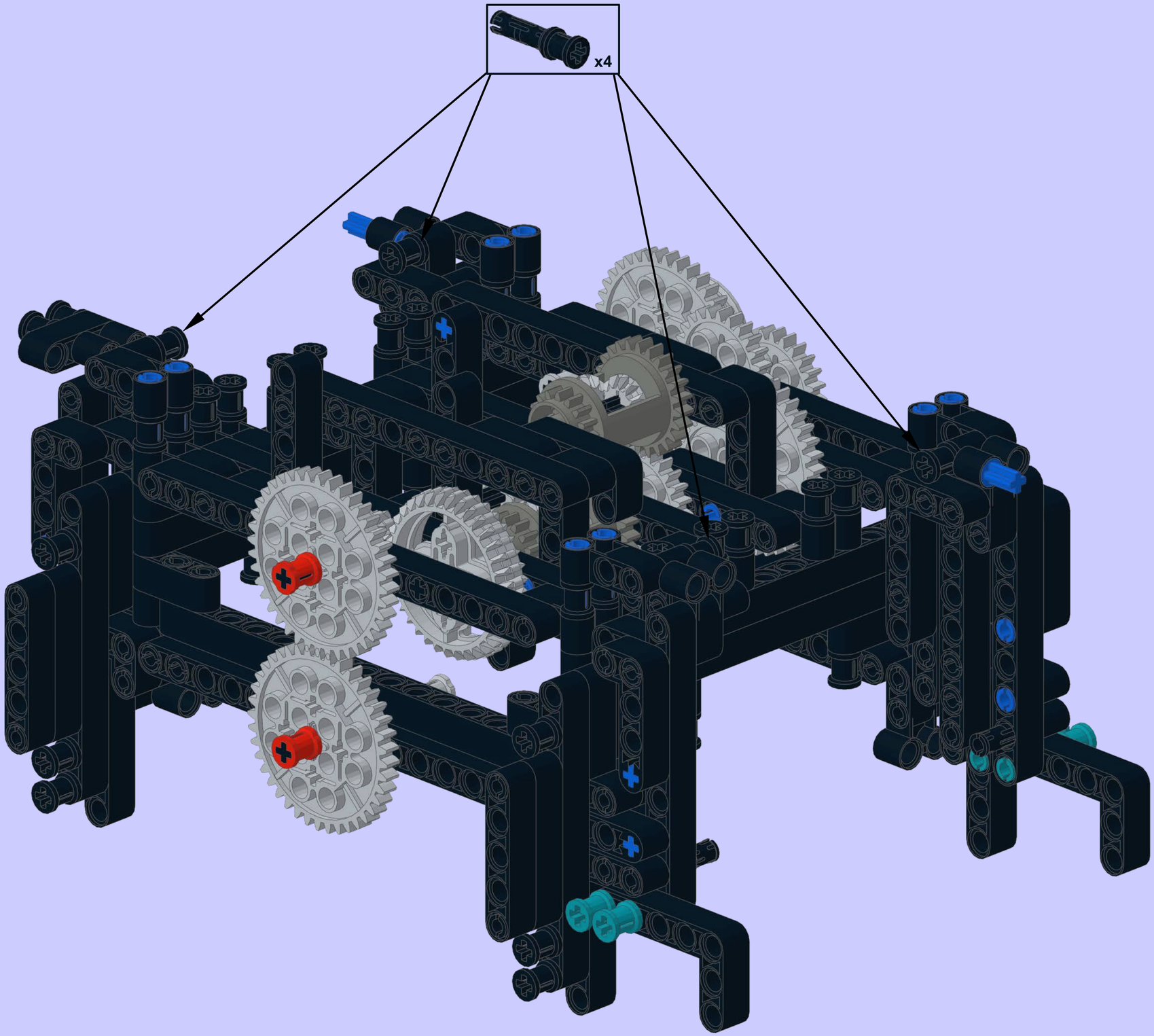

7

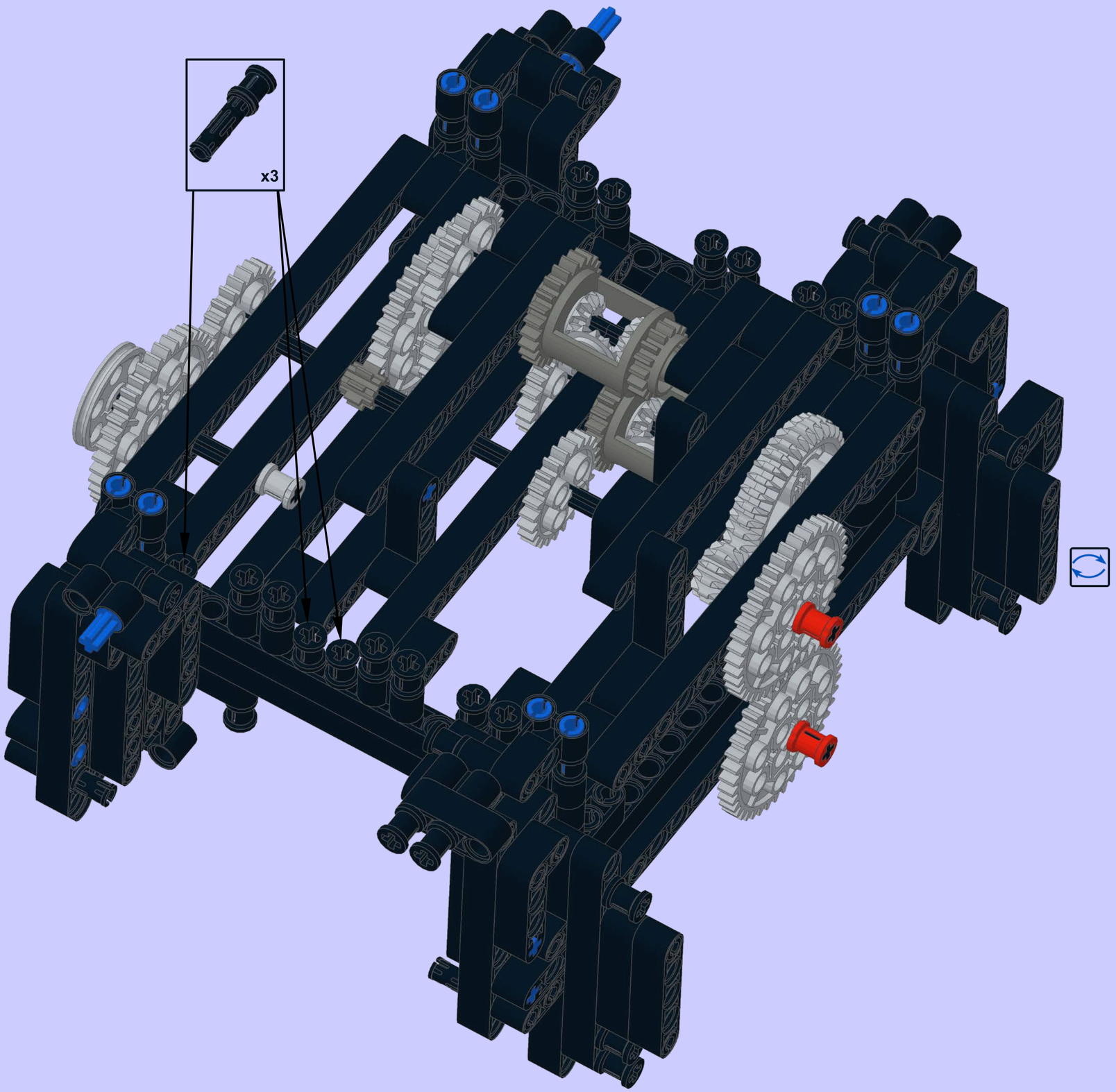

8

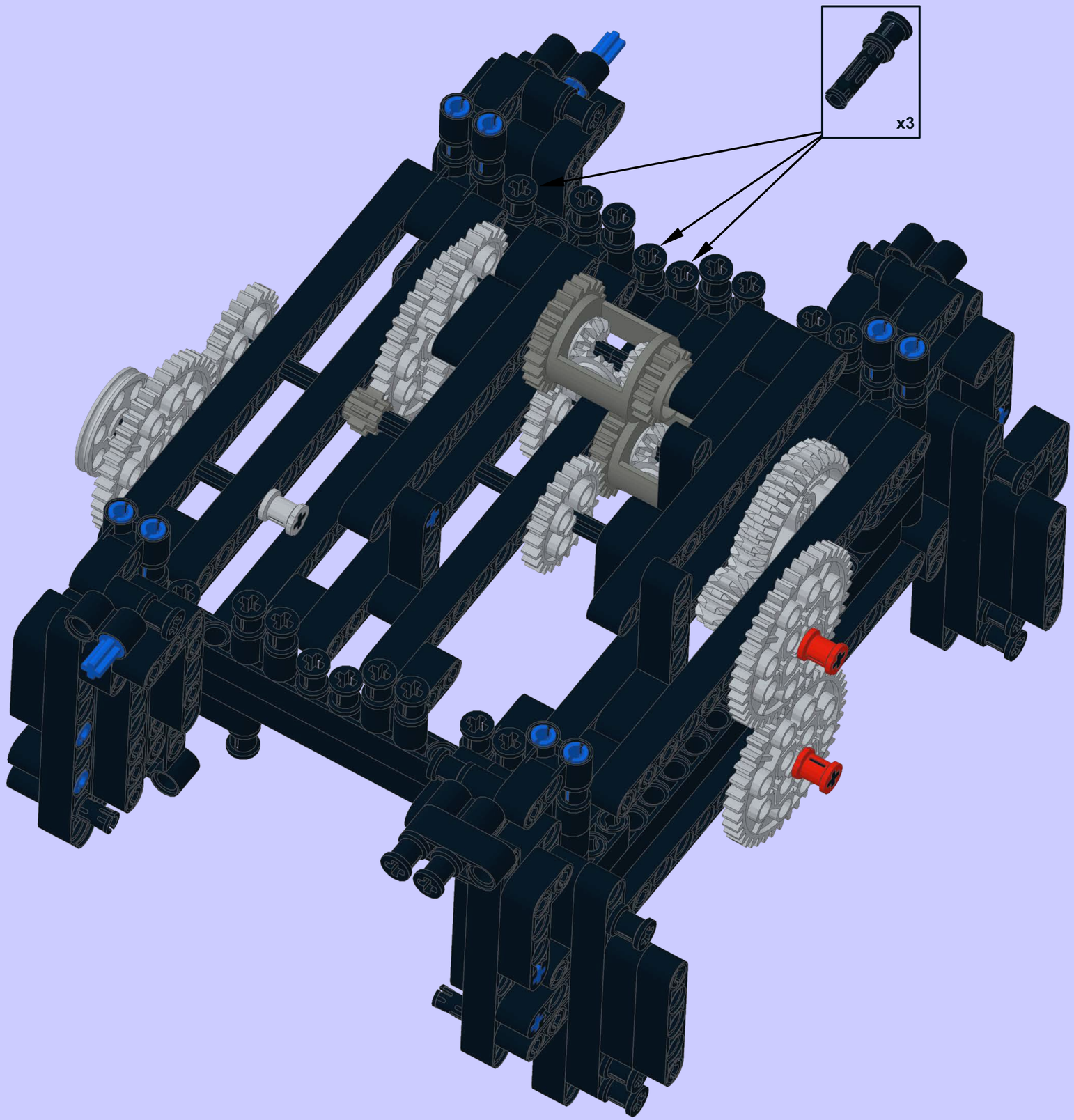

1

## "Stack" - Right Back

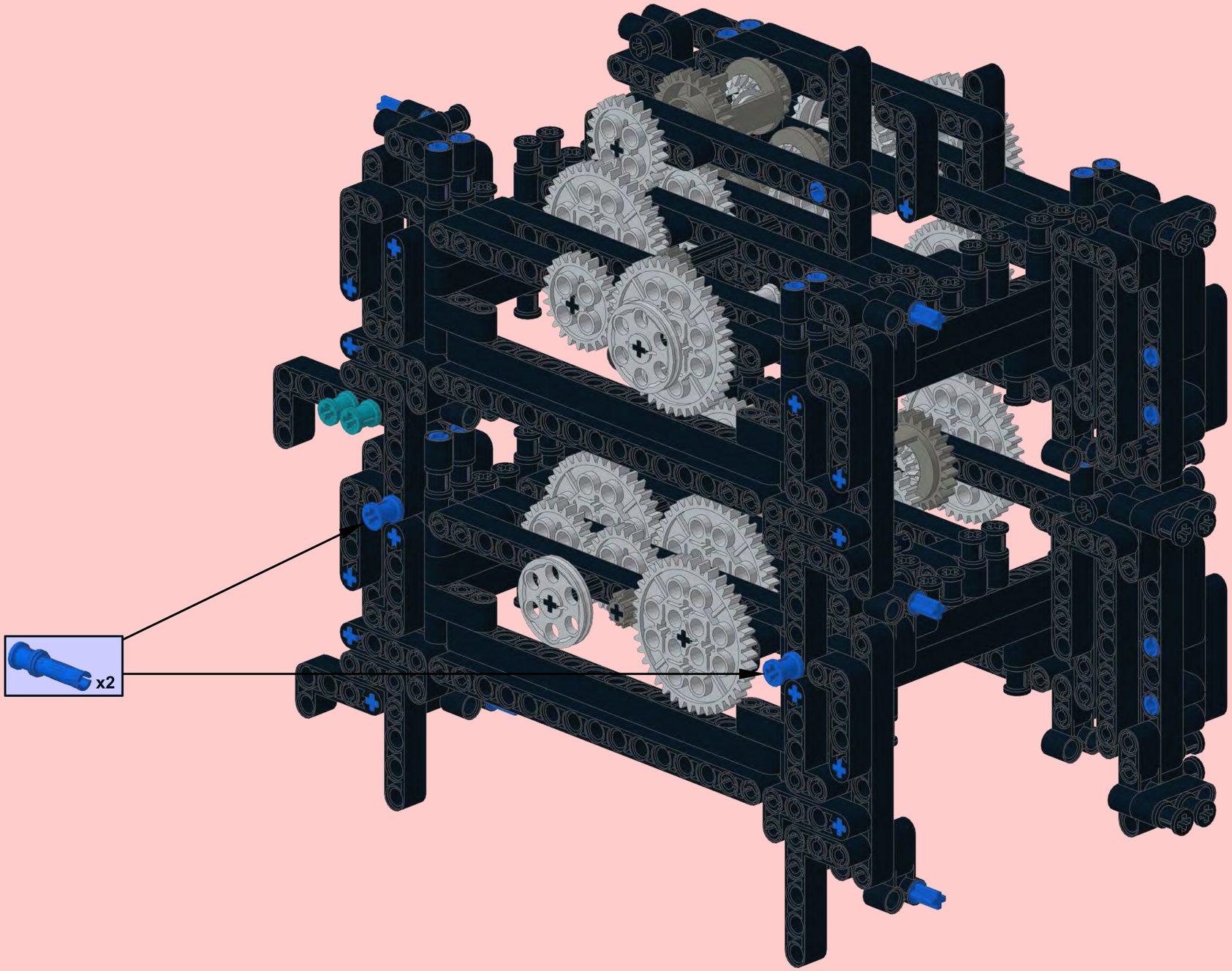

2

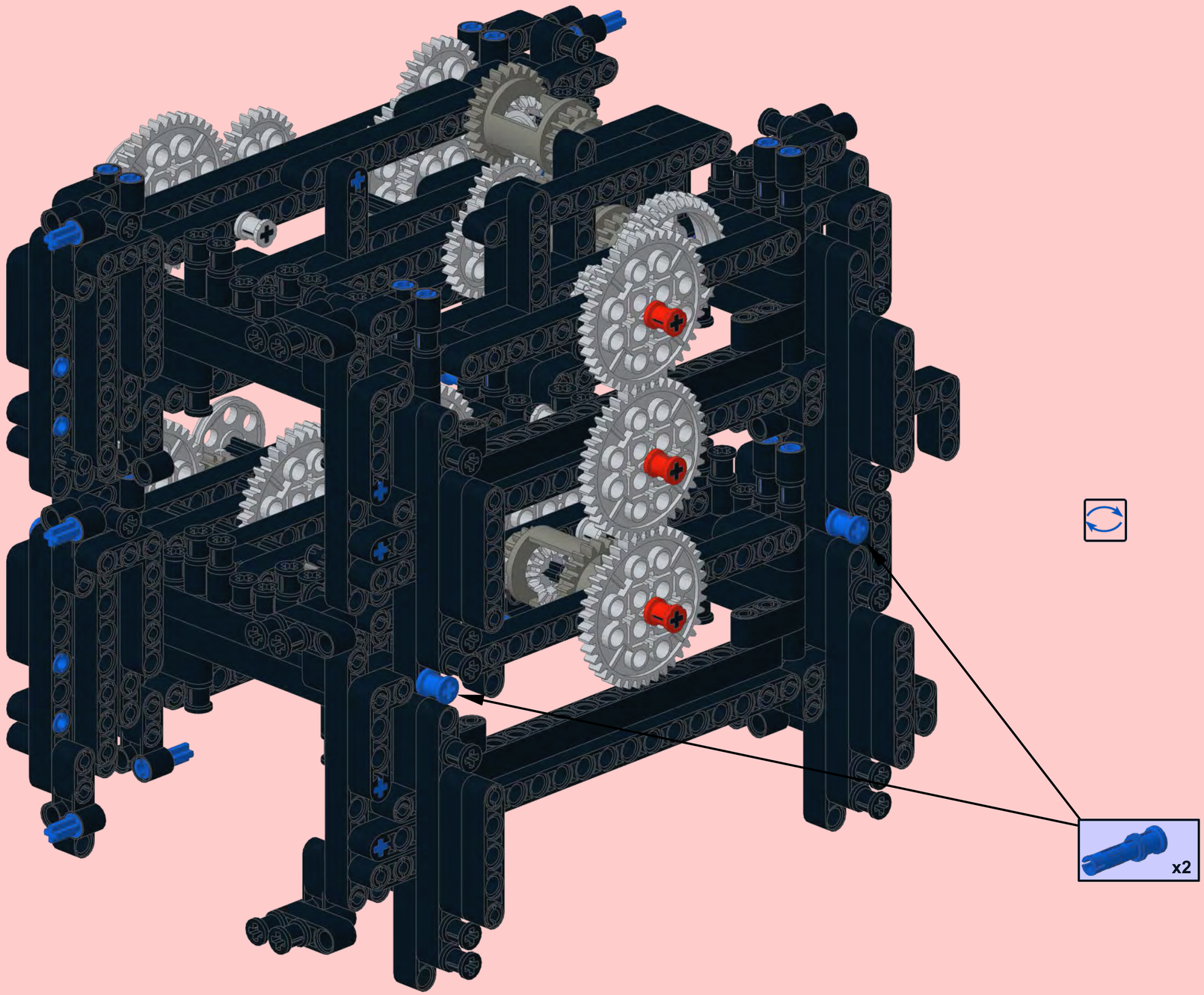

5

5x

x5

6

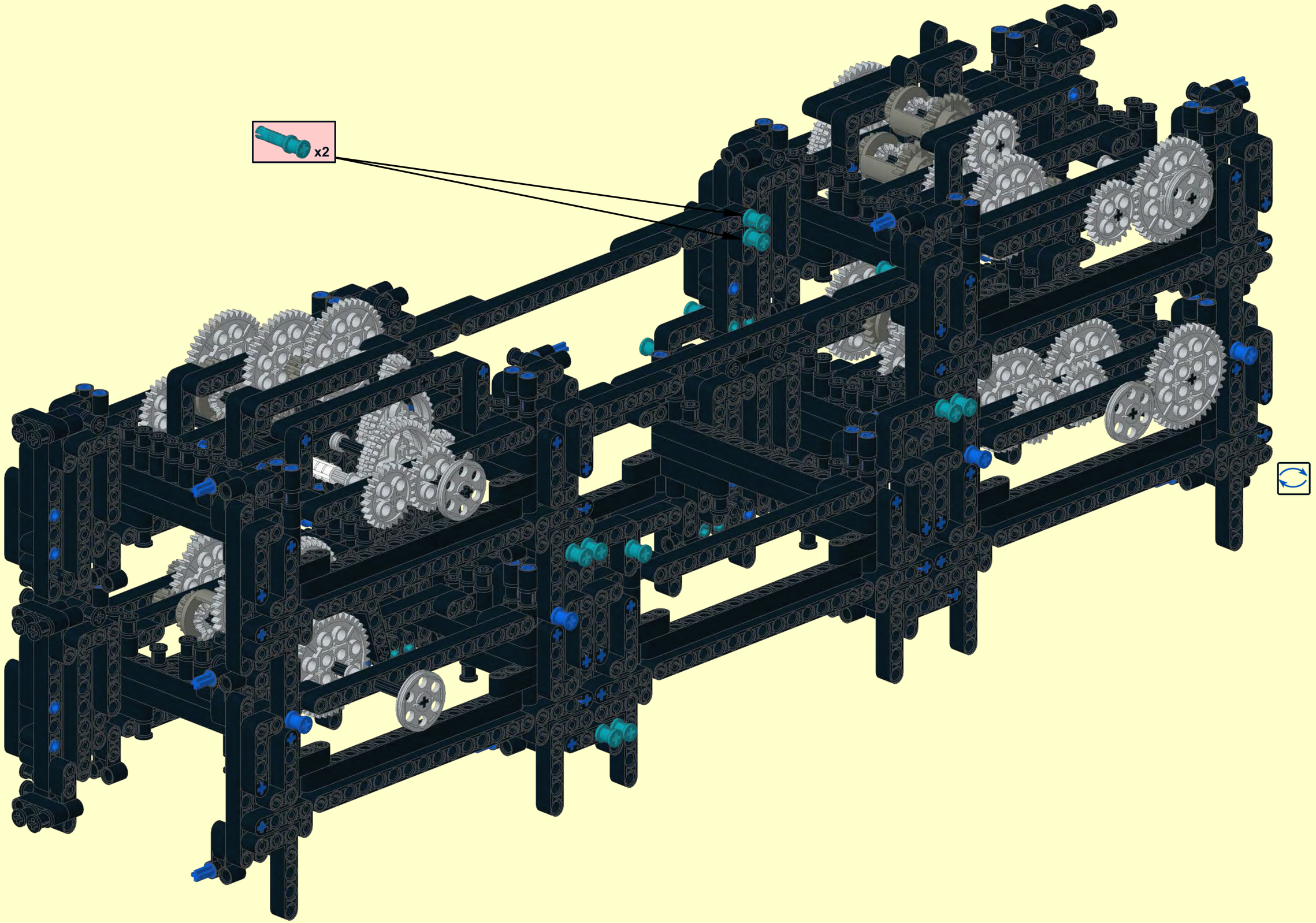

7

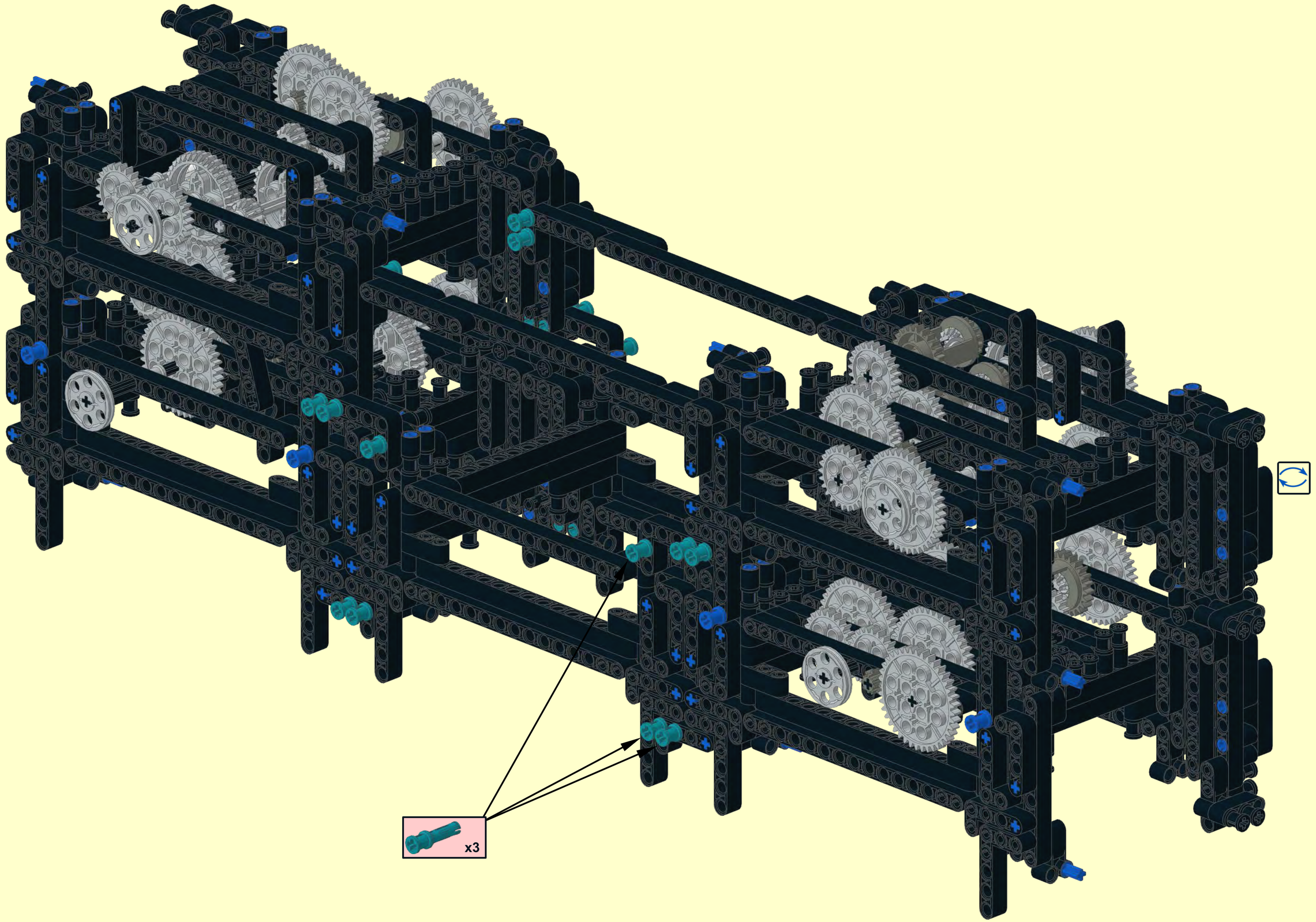

# Left Bottom Front (LBF) calculator - multiply by 47, divide by 25

**1**

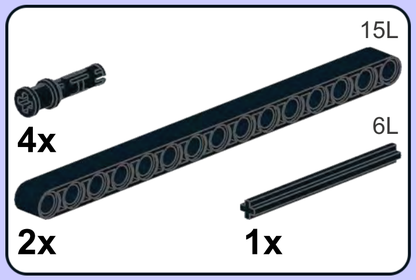


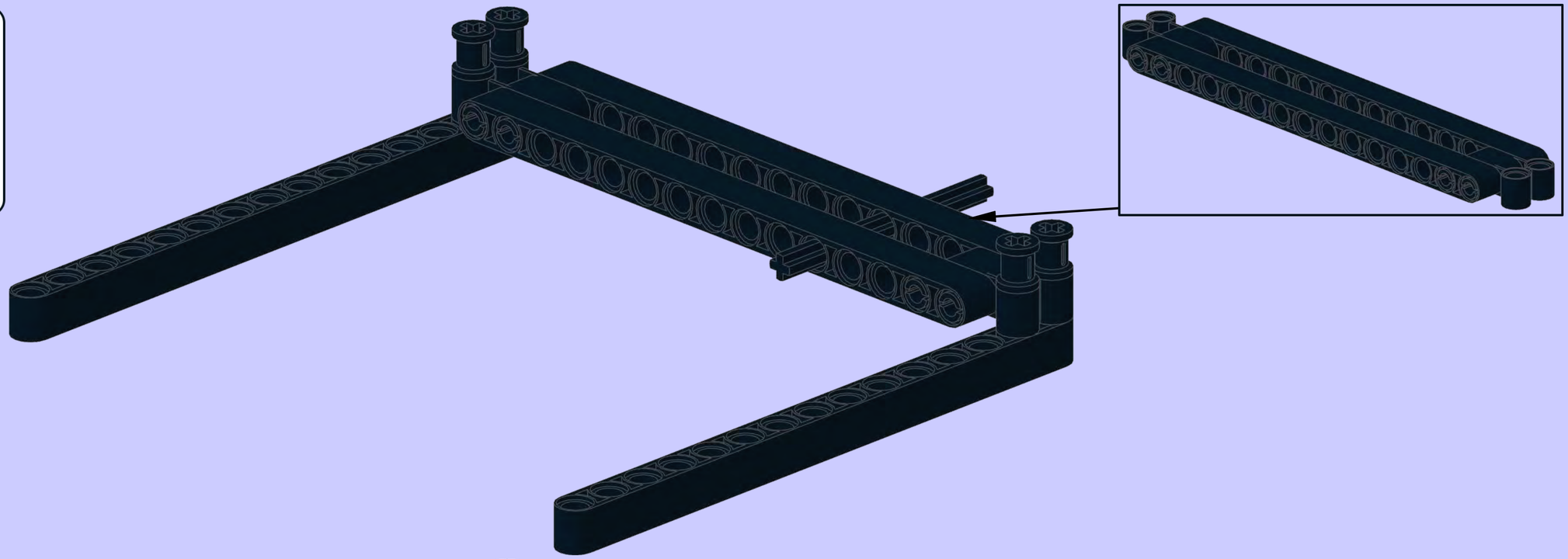

**2**

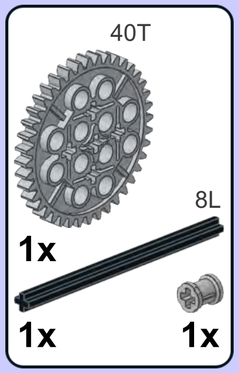

**3**

8T

**1x**

24T

8L

**2x**

**1x**

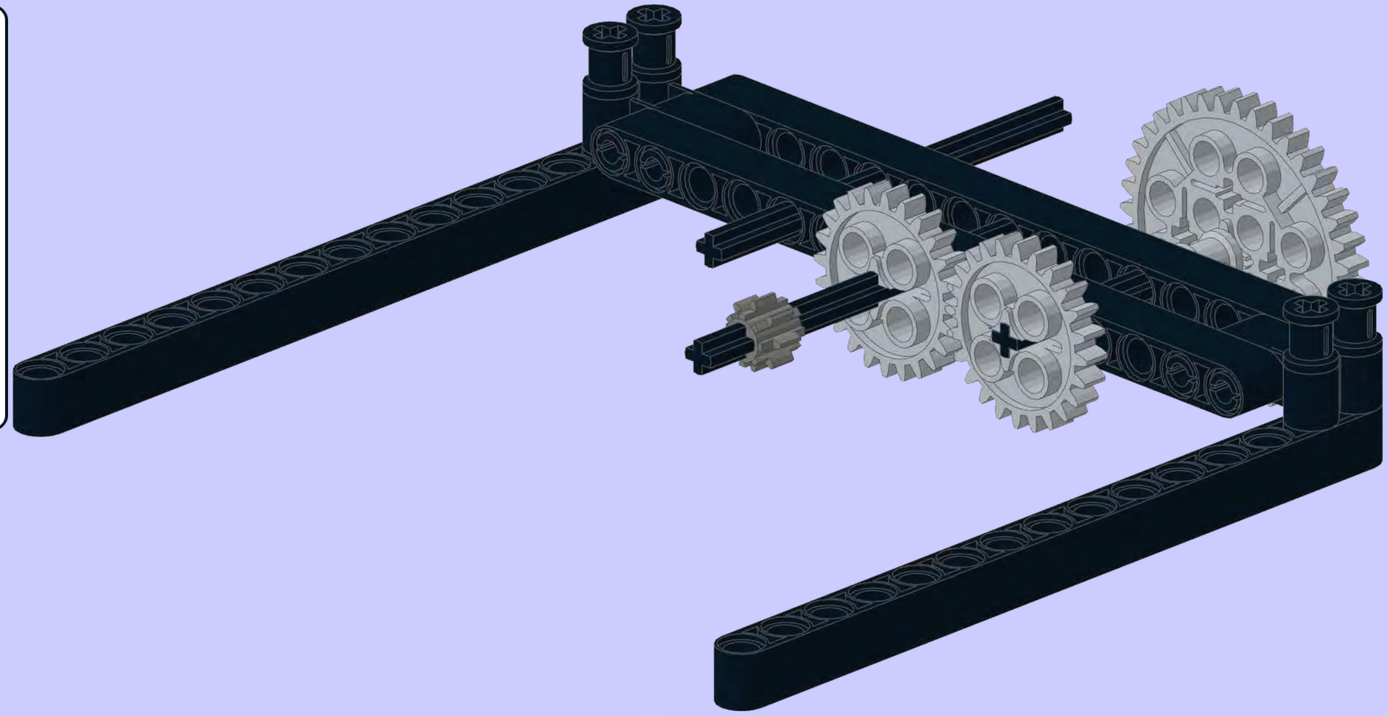

**4**

12T

**2x**

**1x**

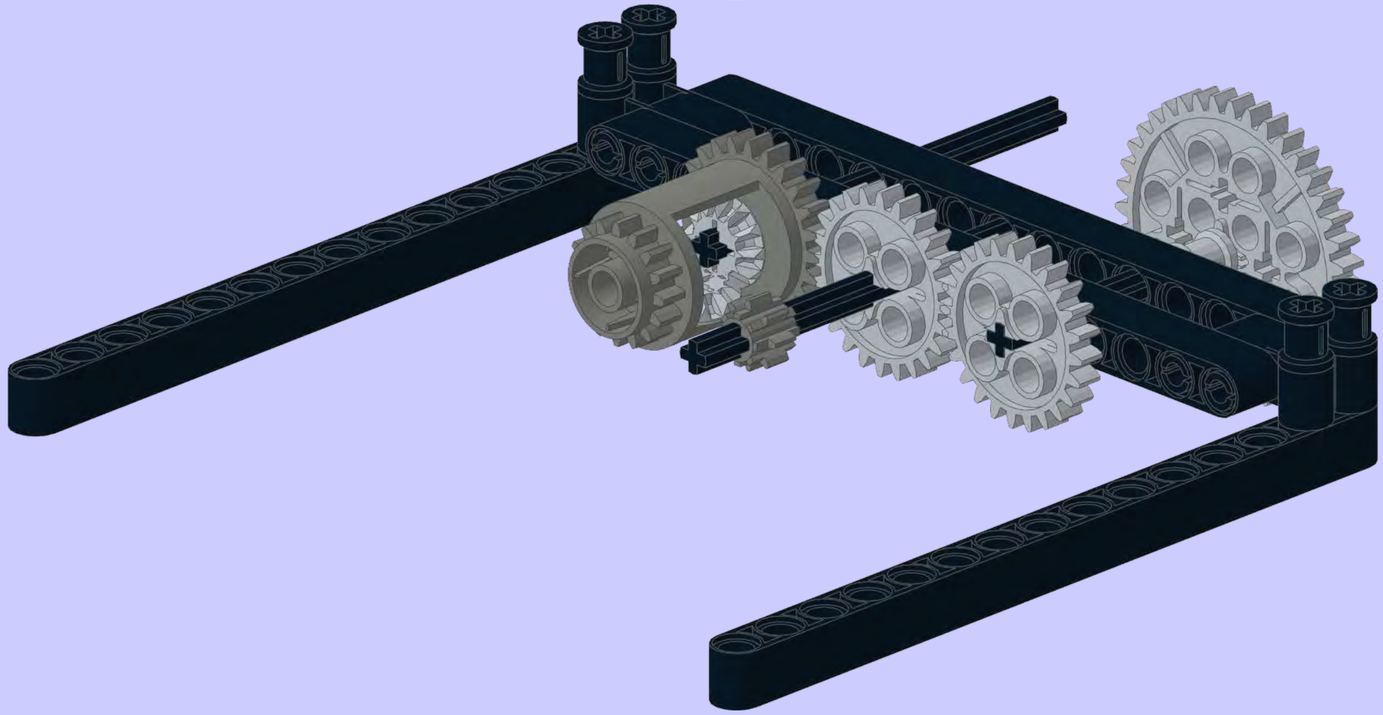

5

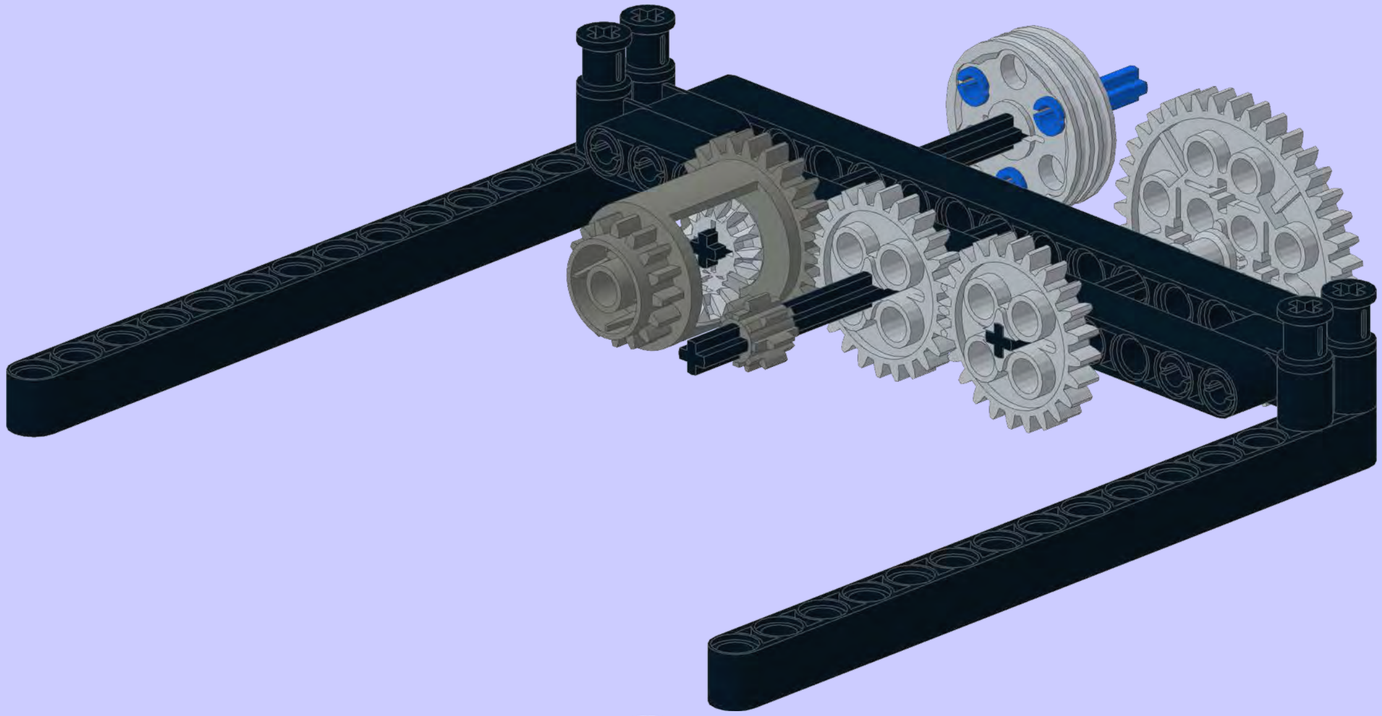

6

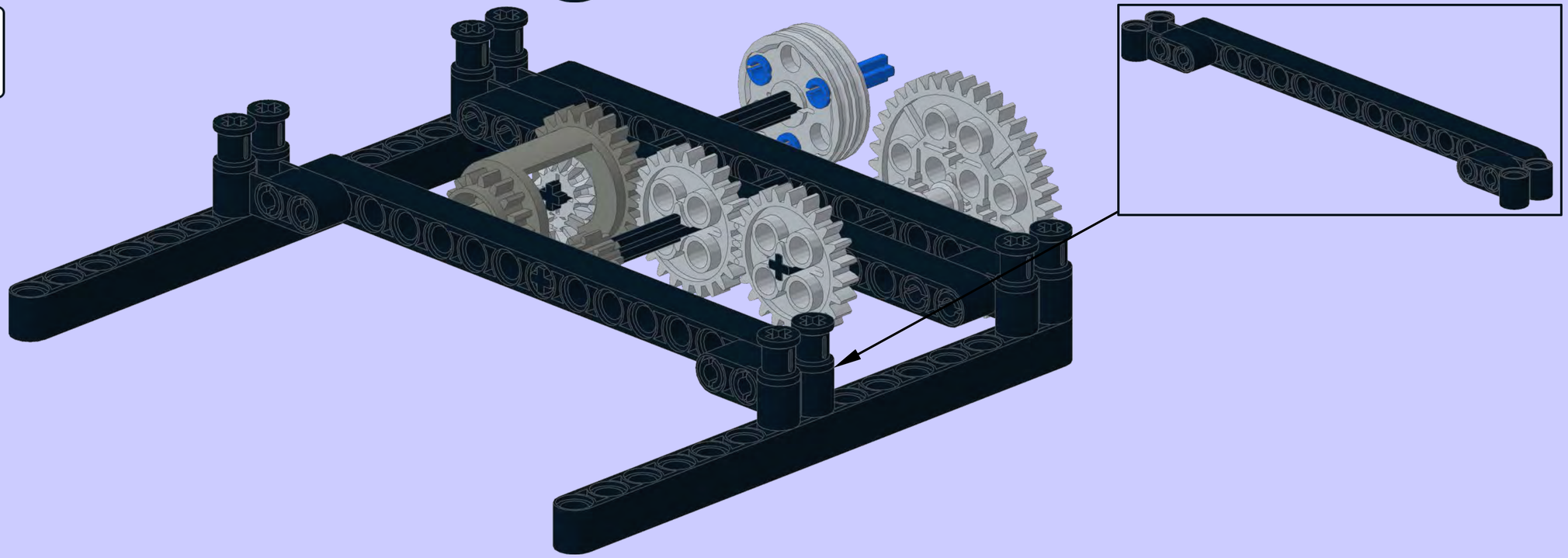

**7**

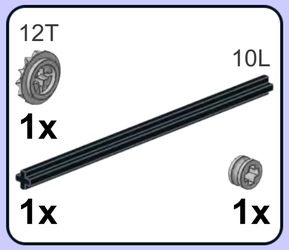


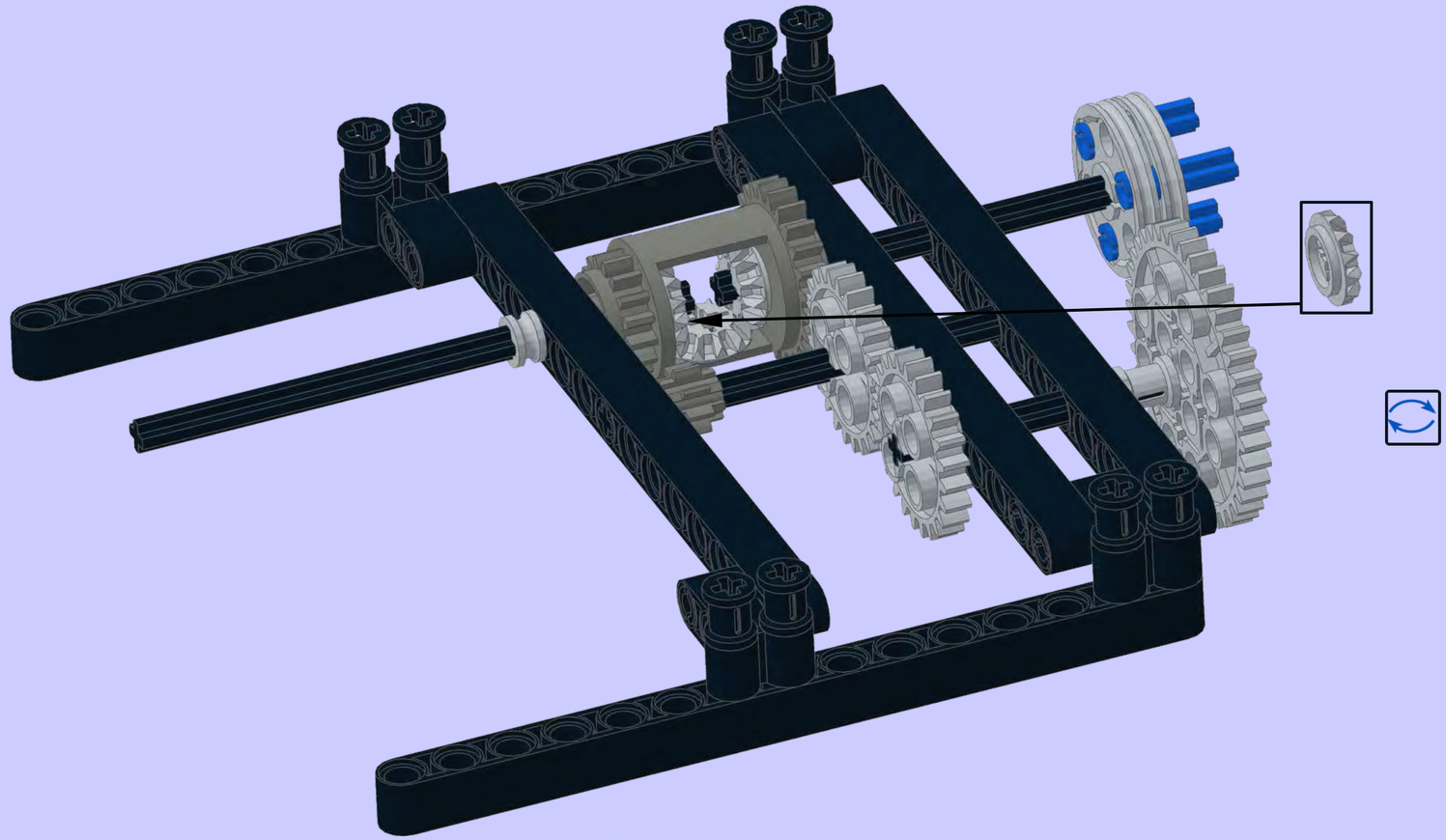

**8**

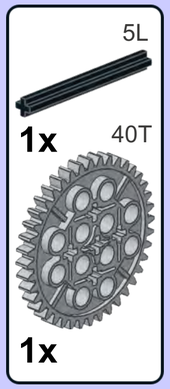


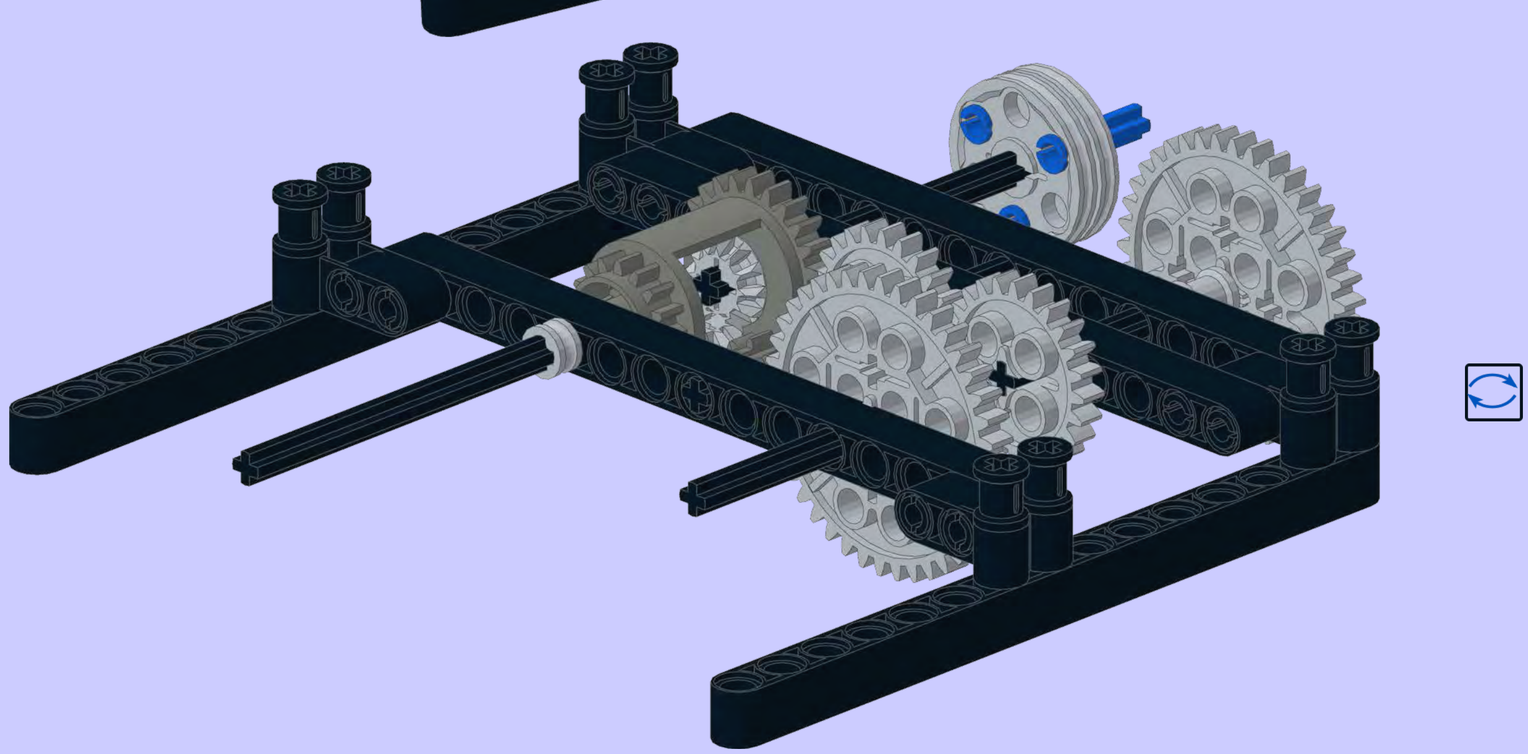

**9**

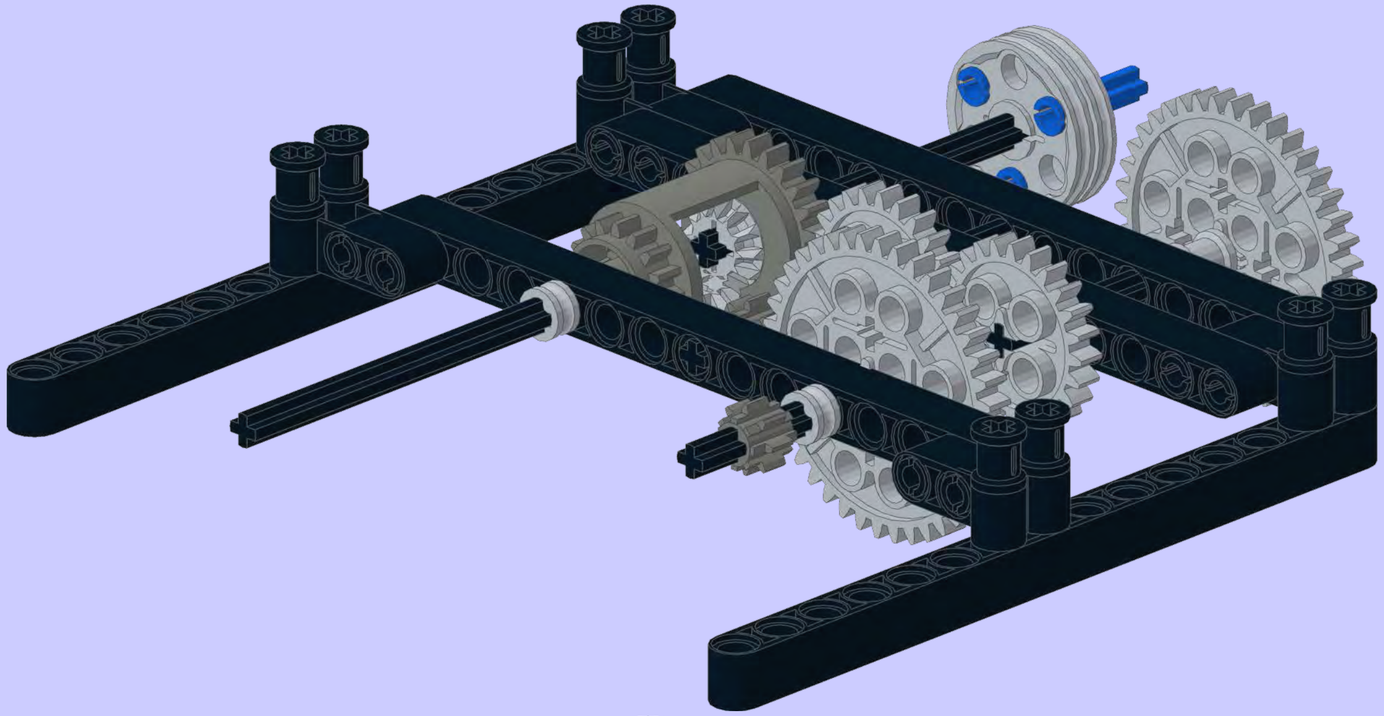

**10**

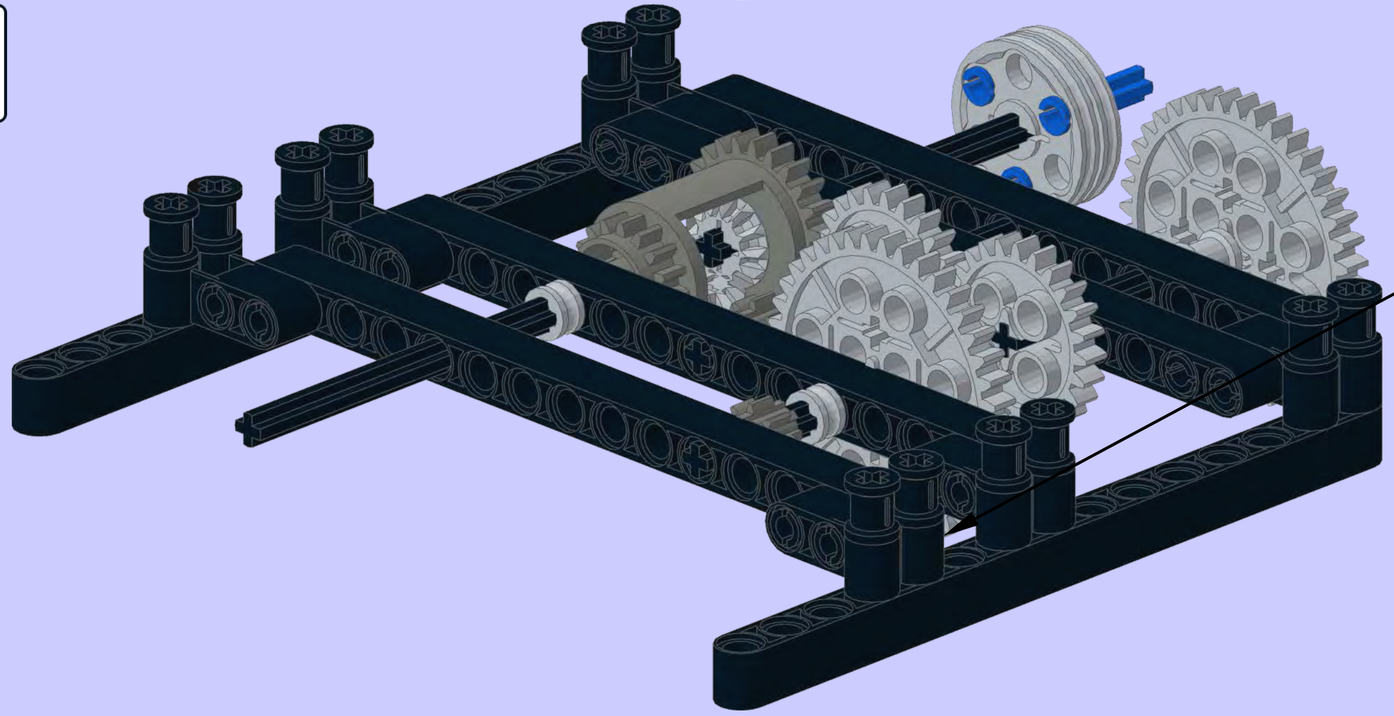

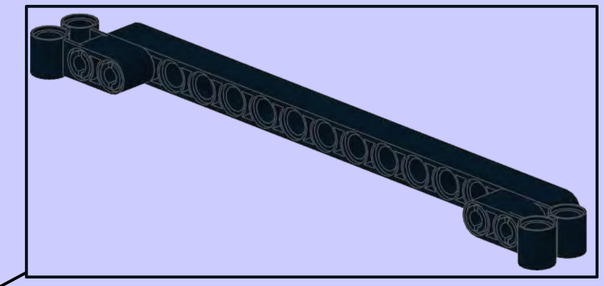

**11**

5L

**1x**

40T

**1x**

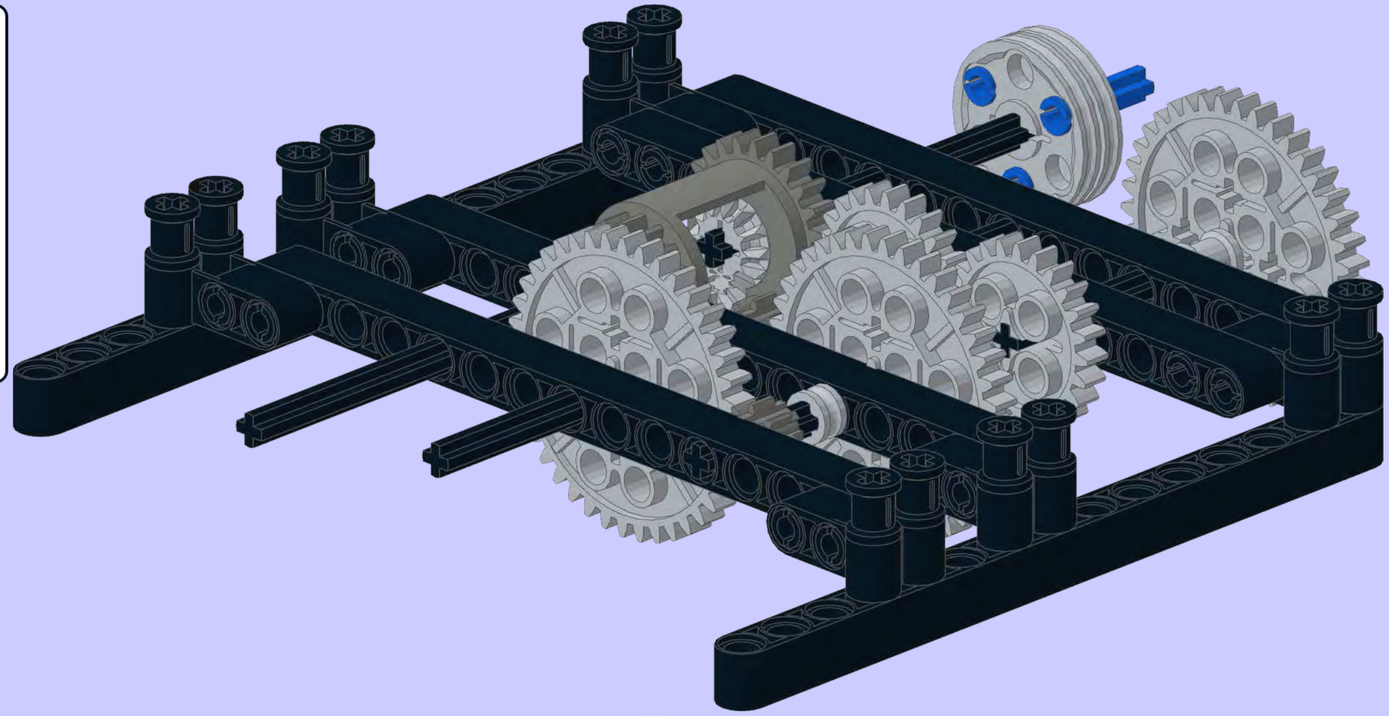

**12**

**1x**

12T

**1x**

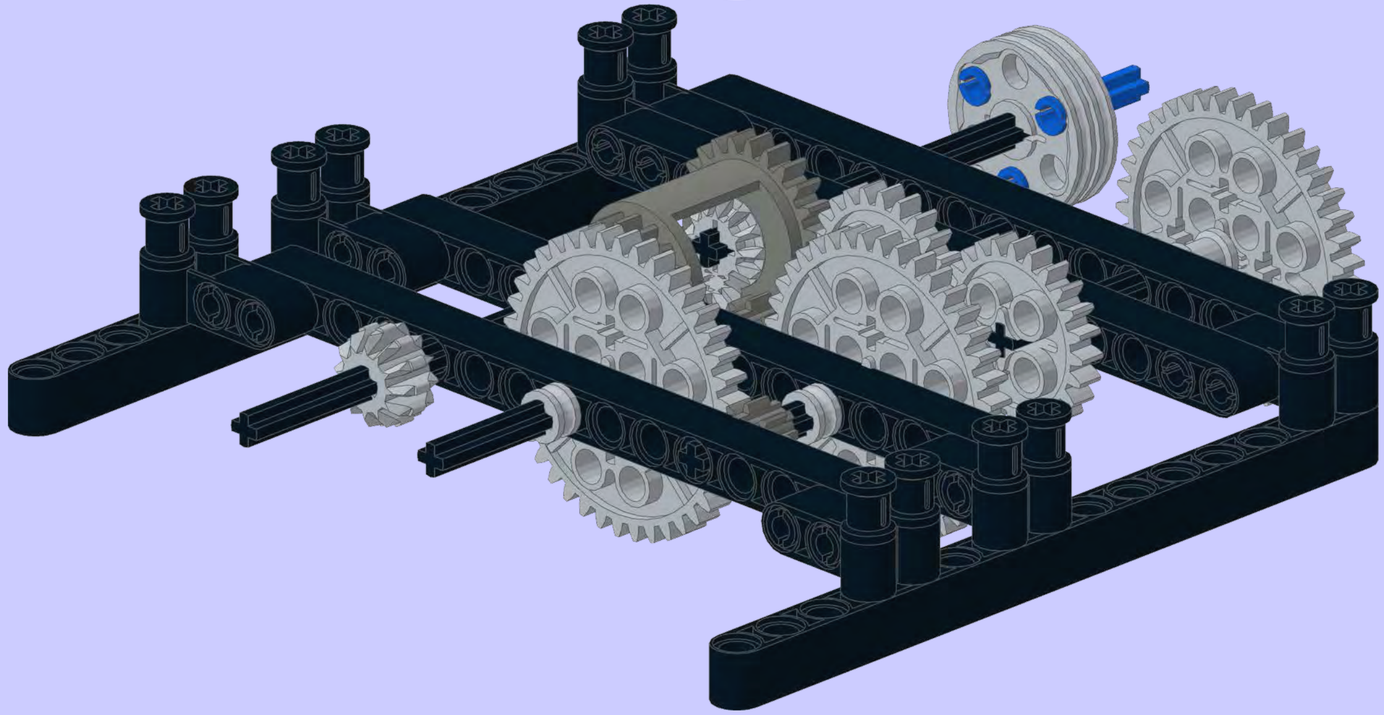

**13**

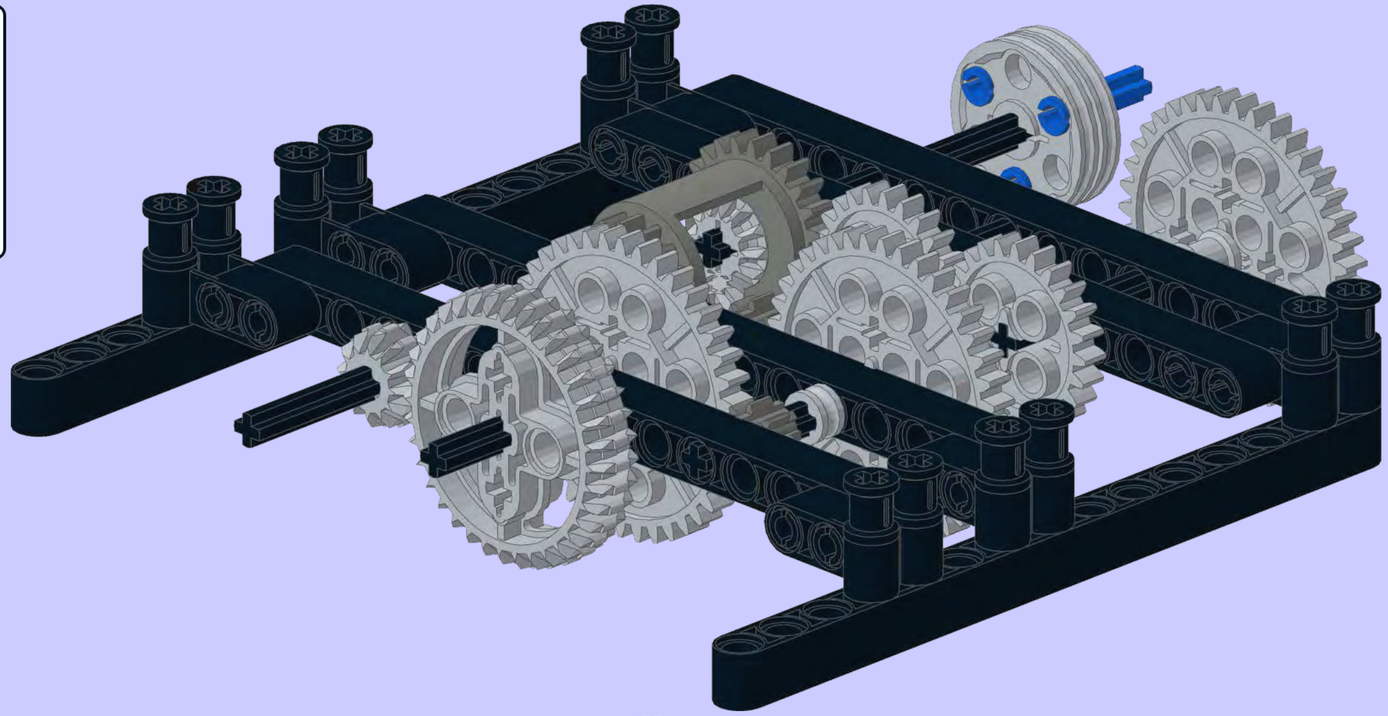

**14**

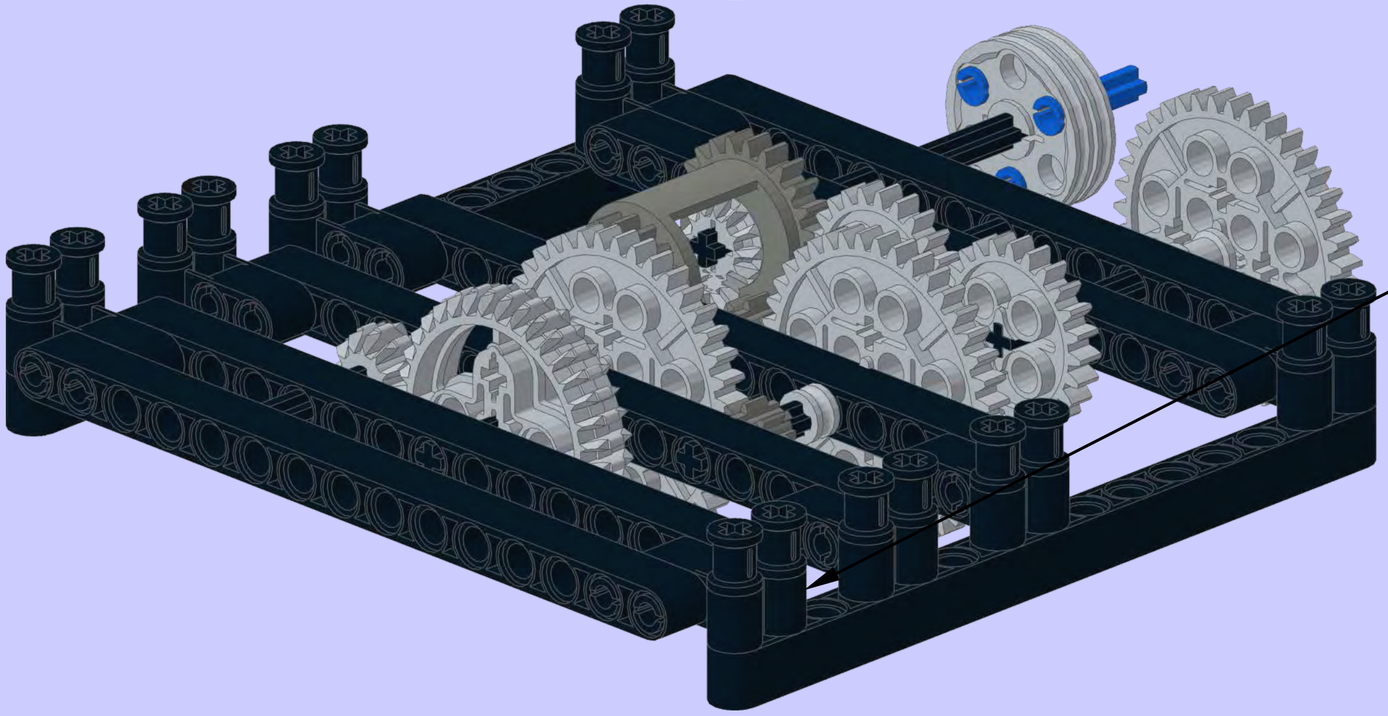

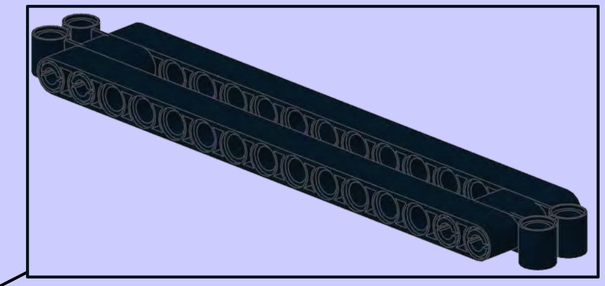

15

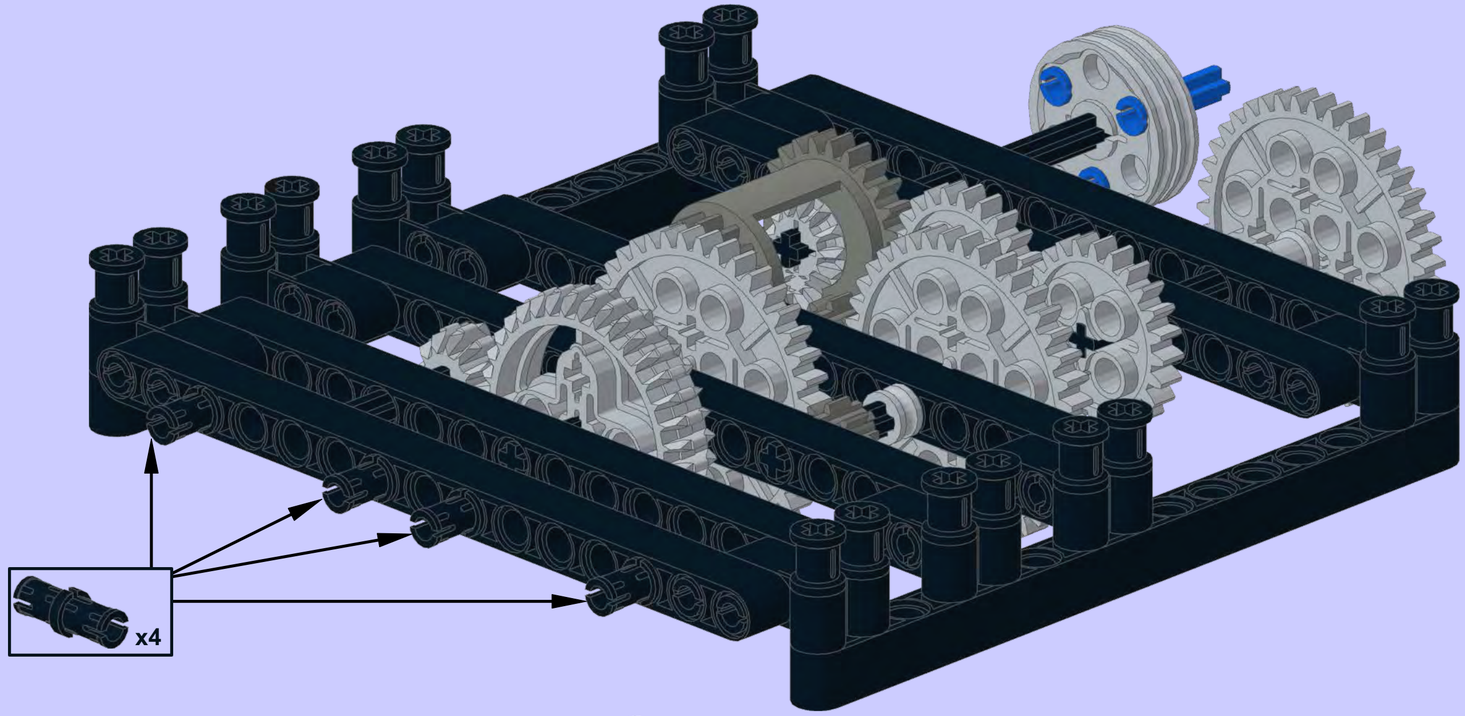


16

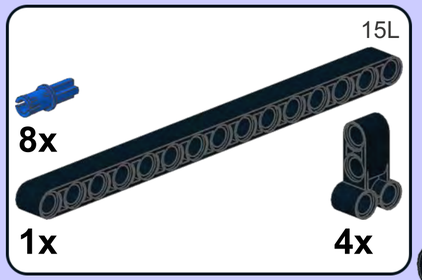


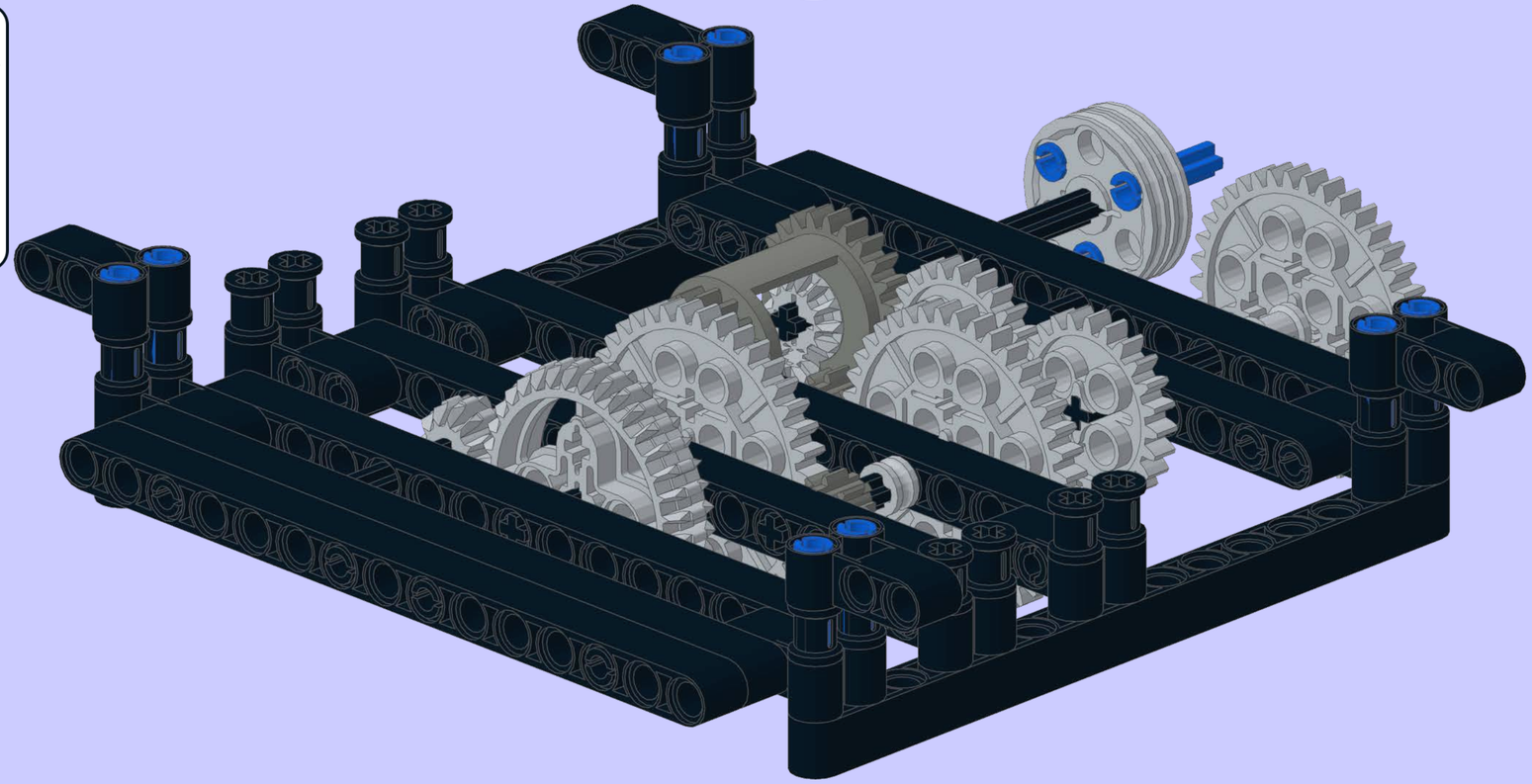

1

# Left Bottom Front (LBF) rack - using standard base

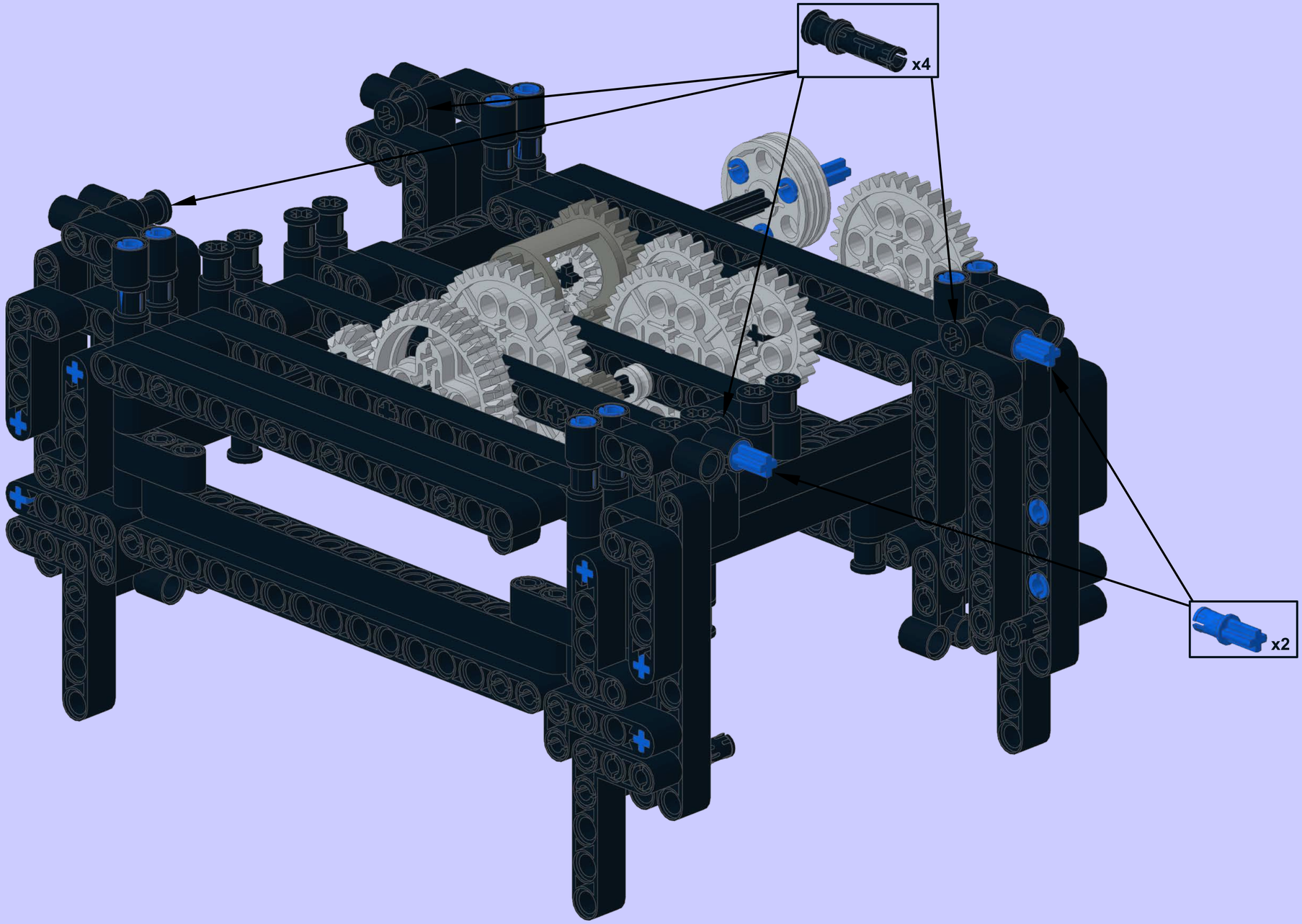

2

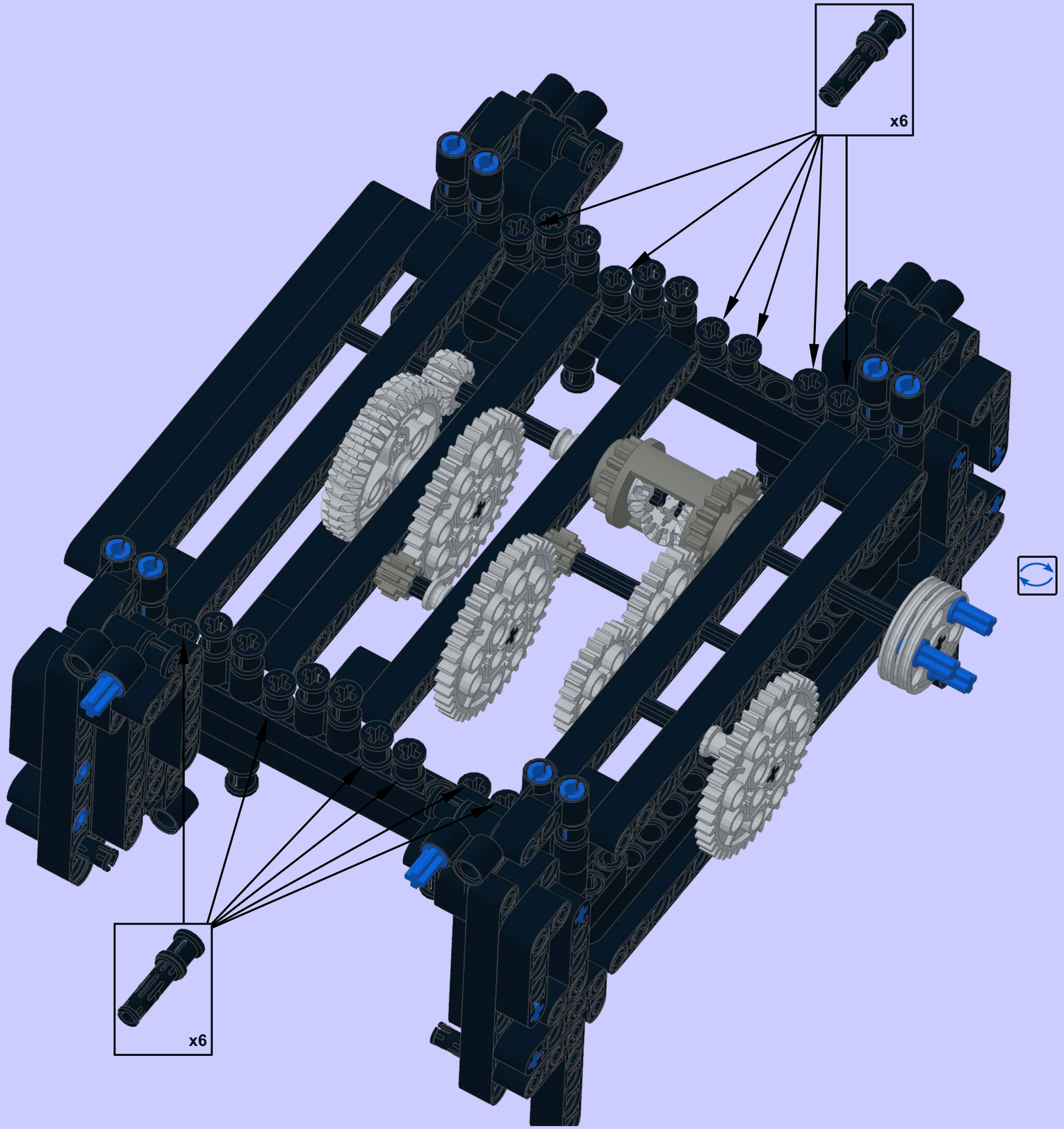

3

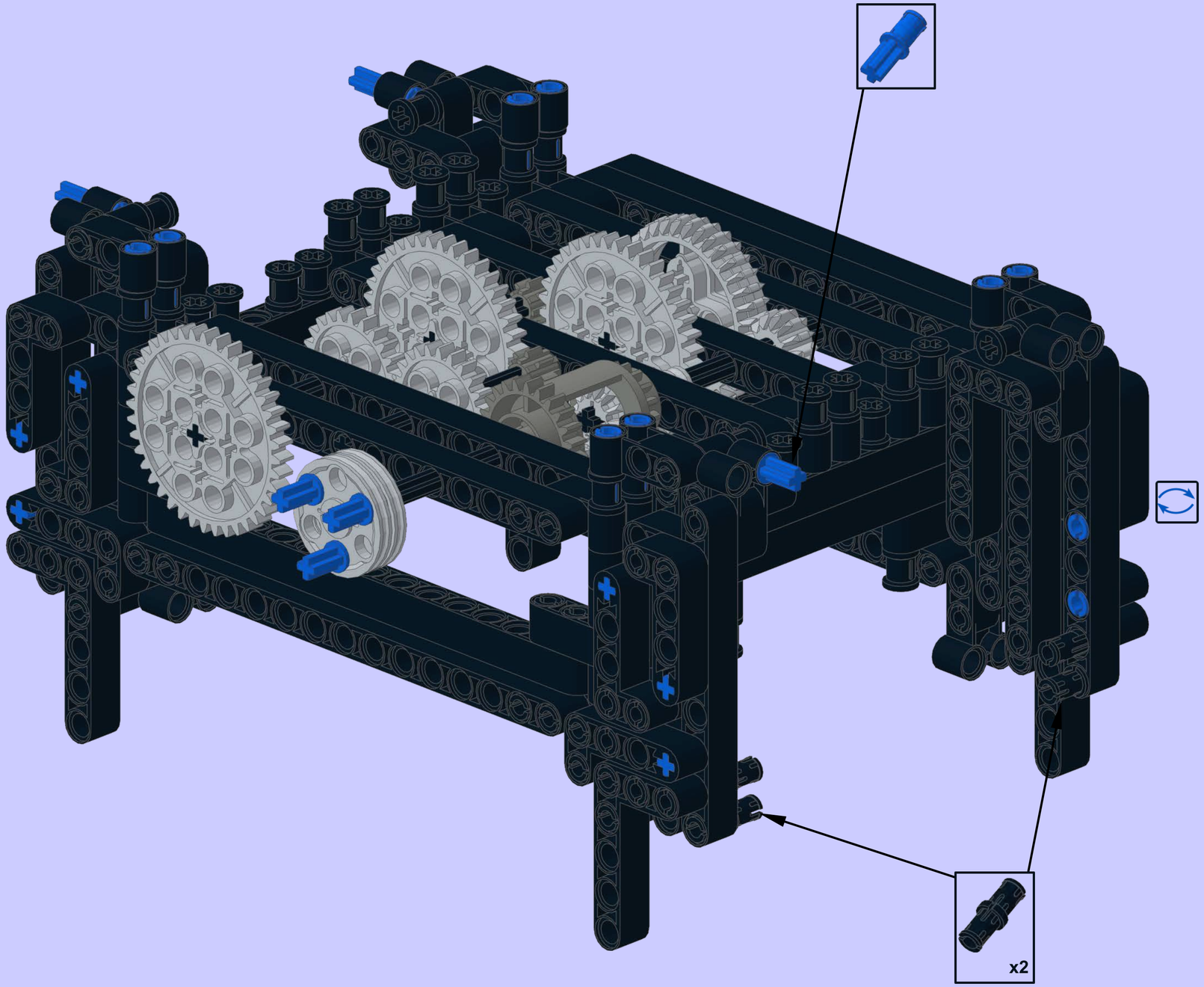

4

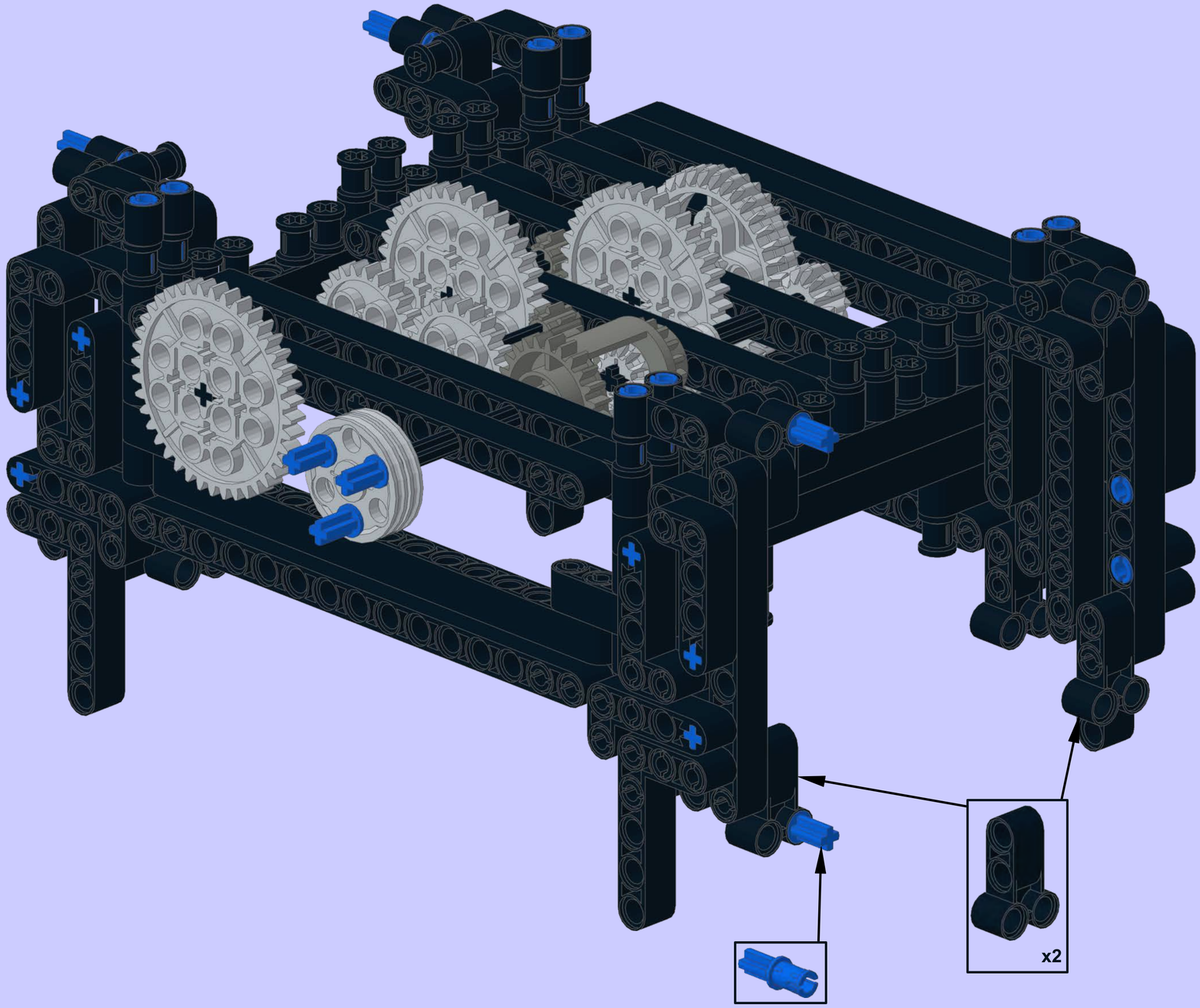

5

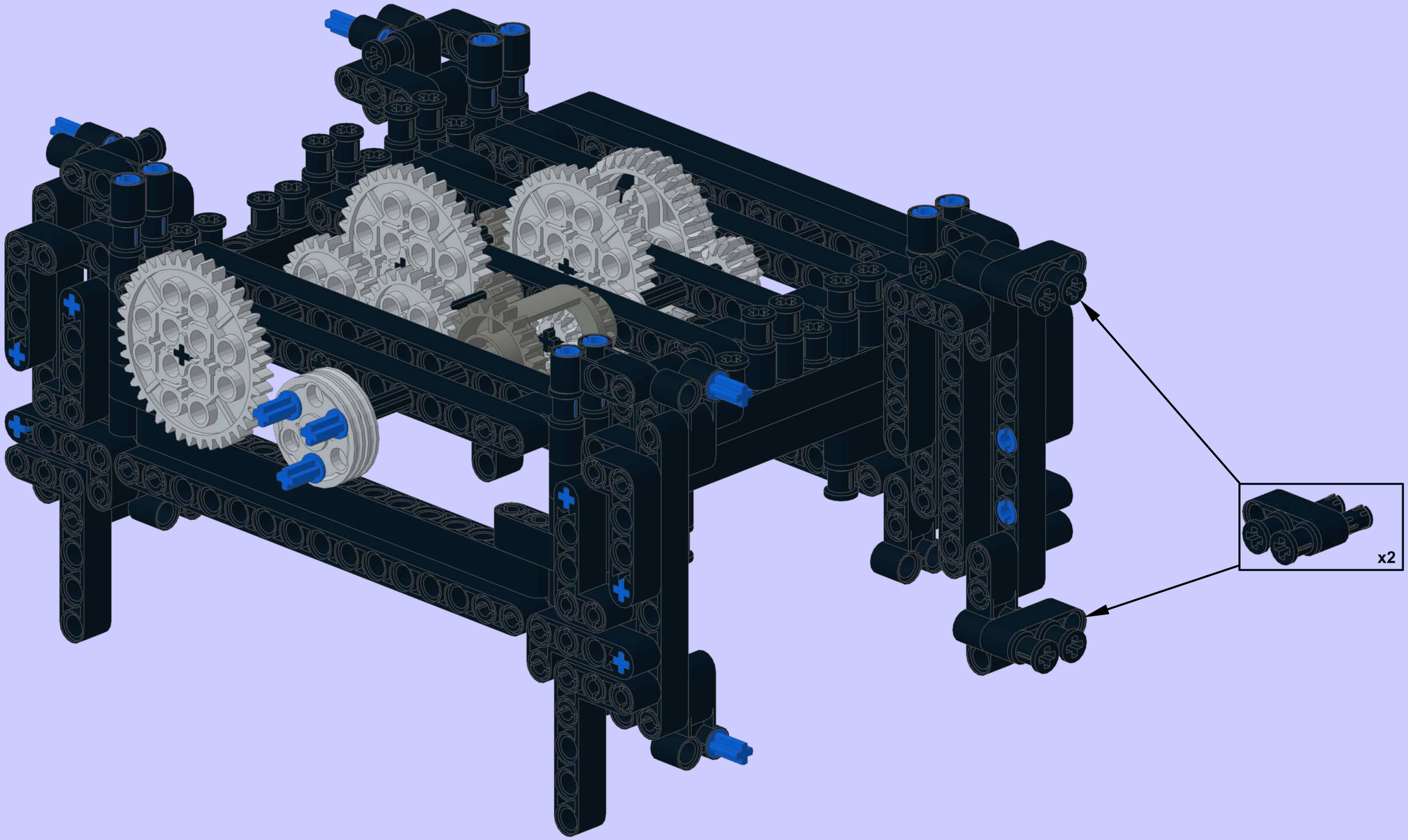

6

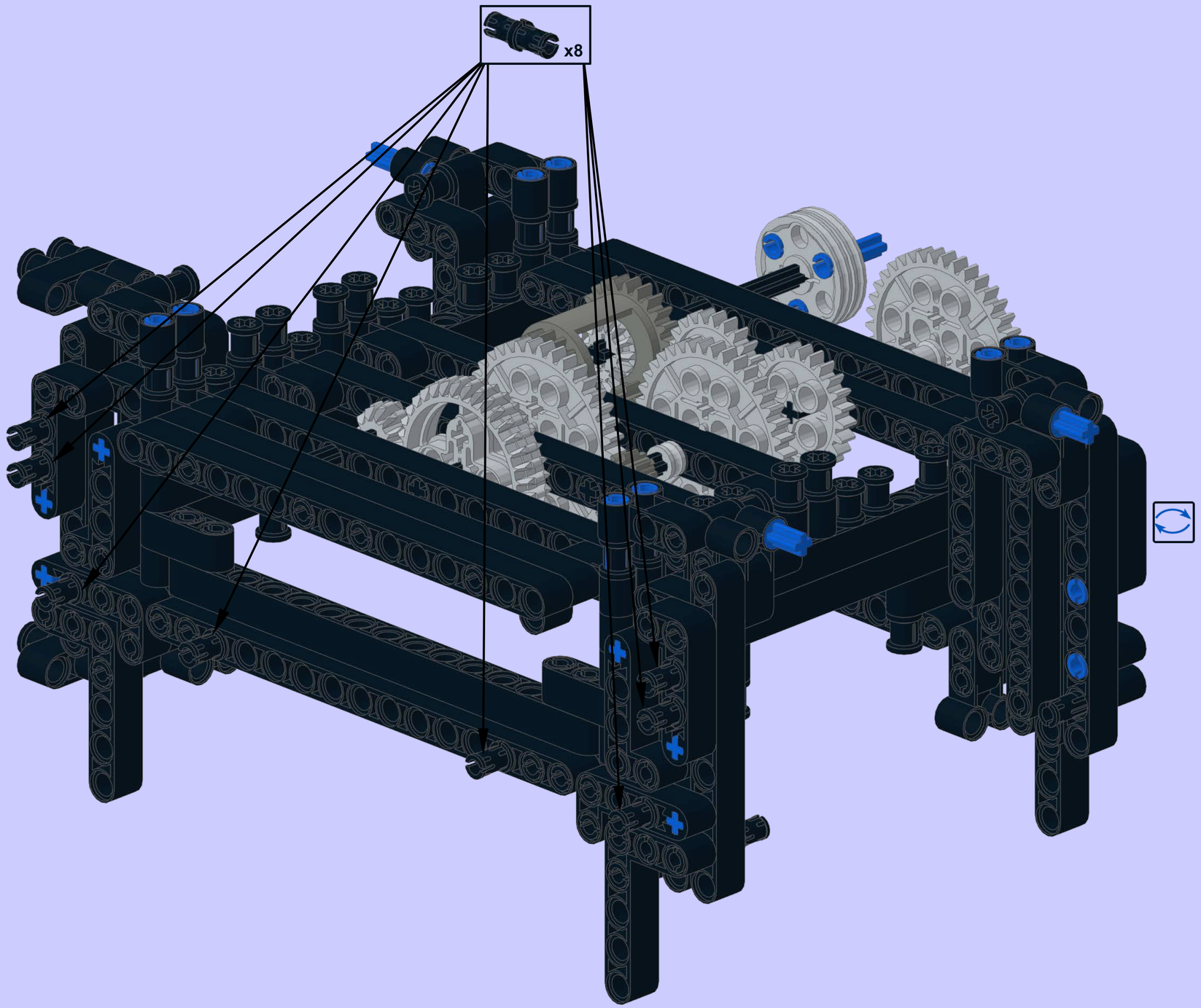

7

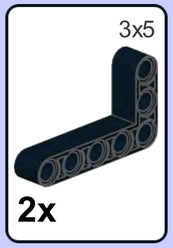


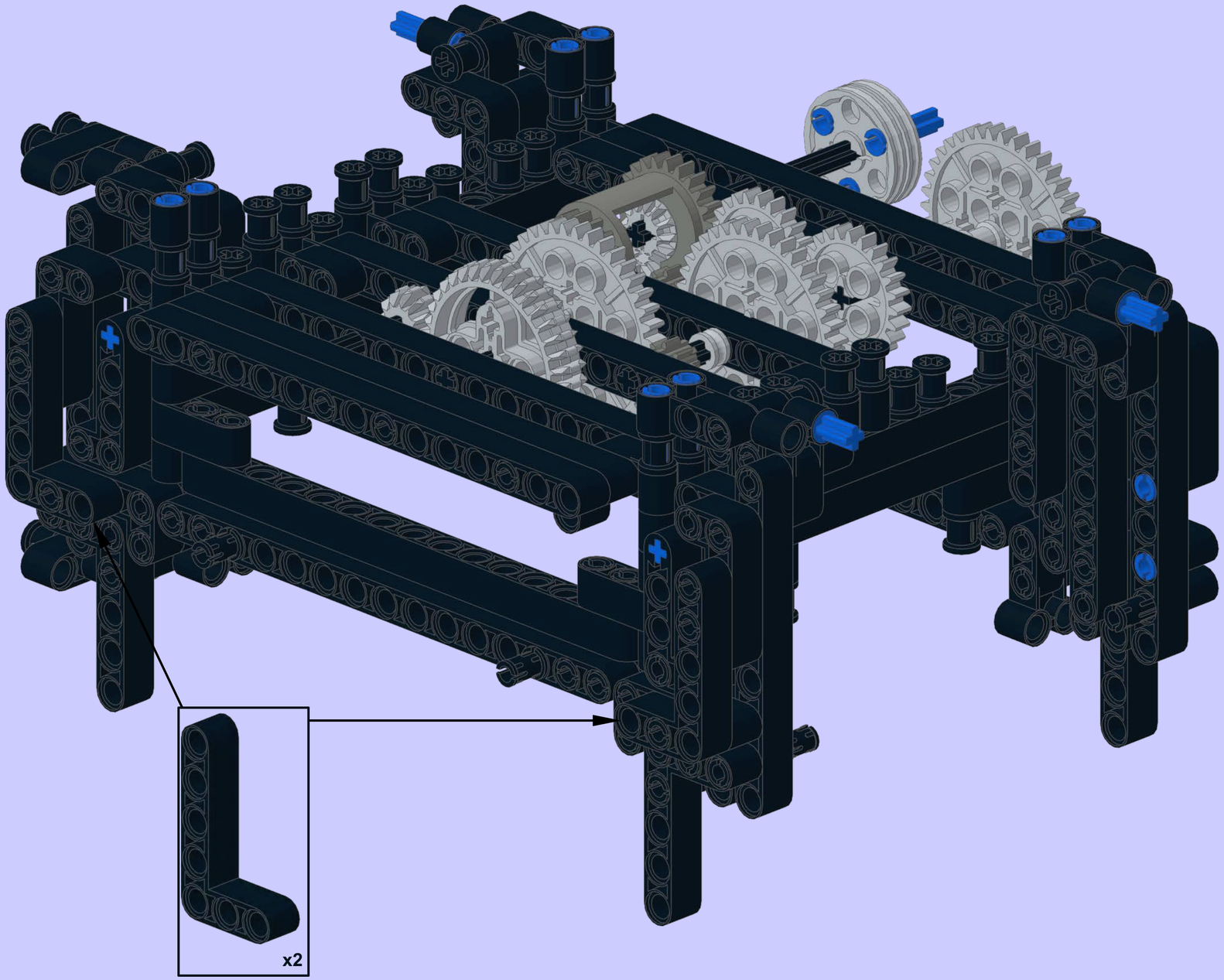

8

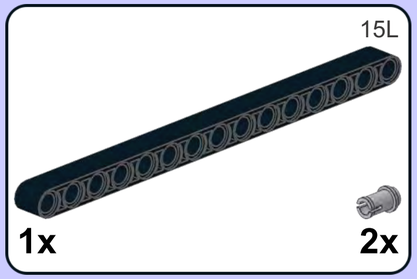


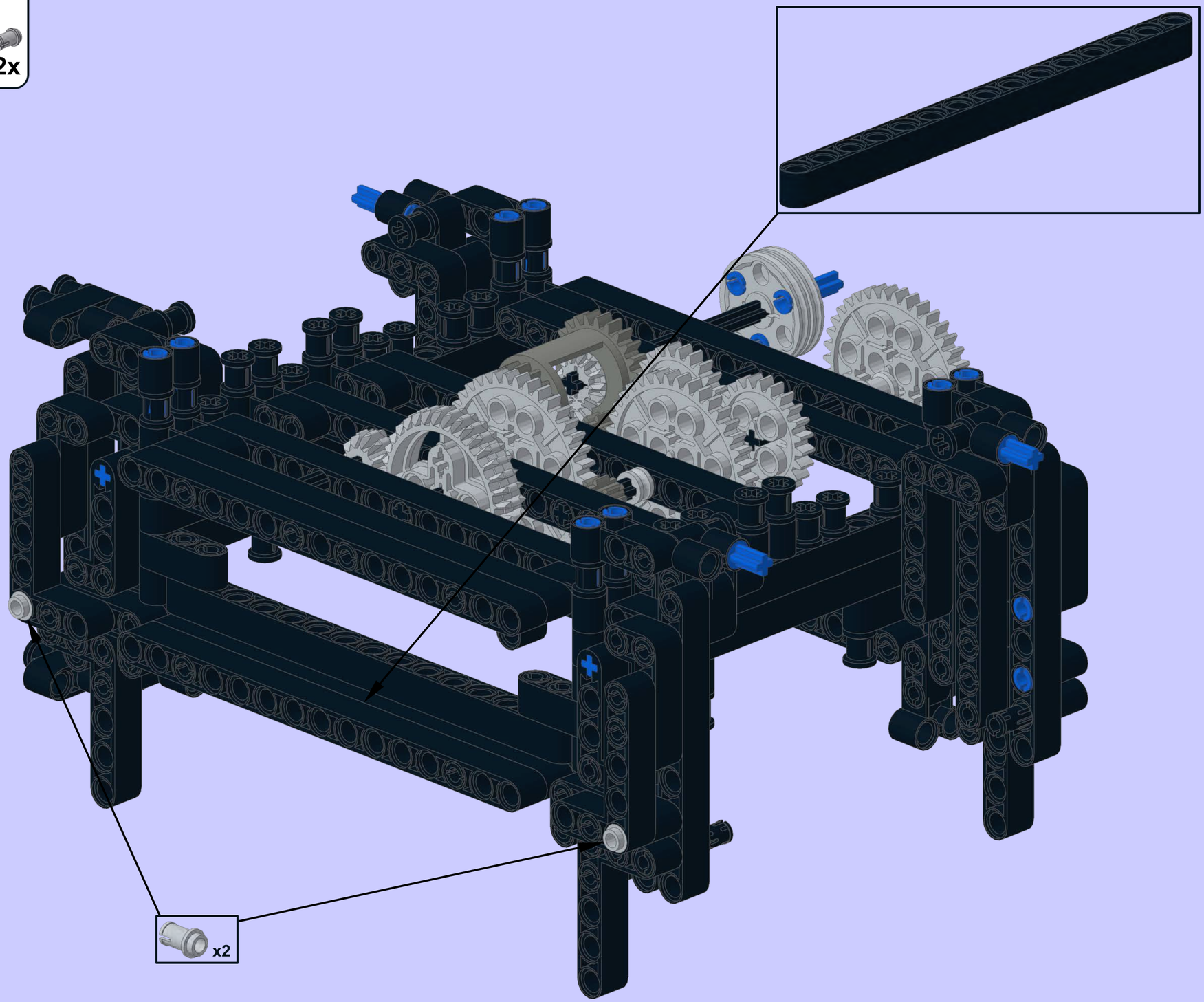

9

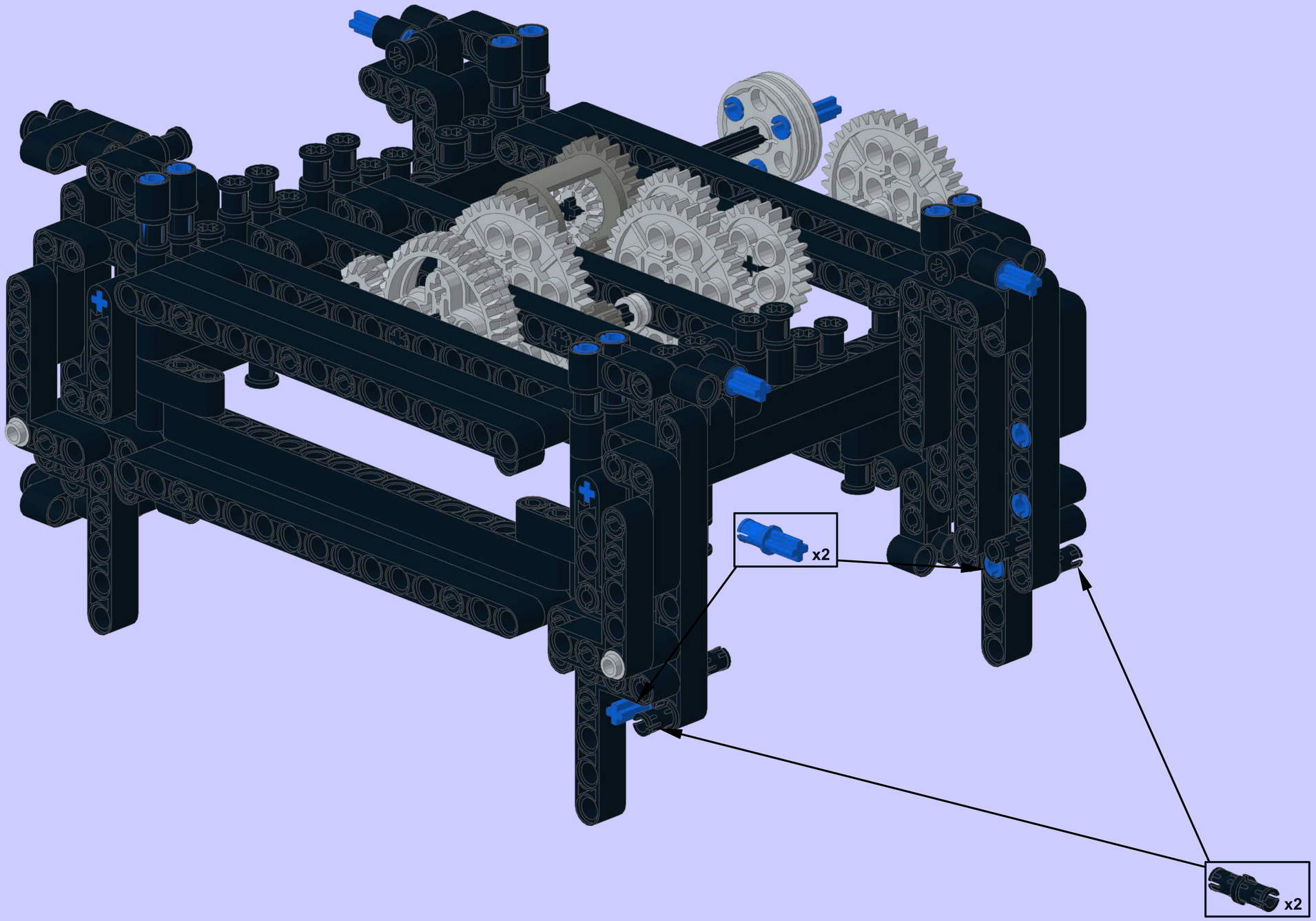

10

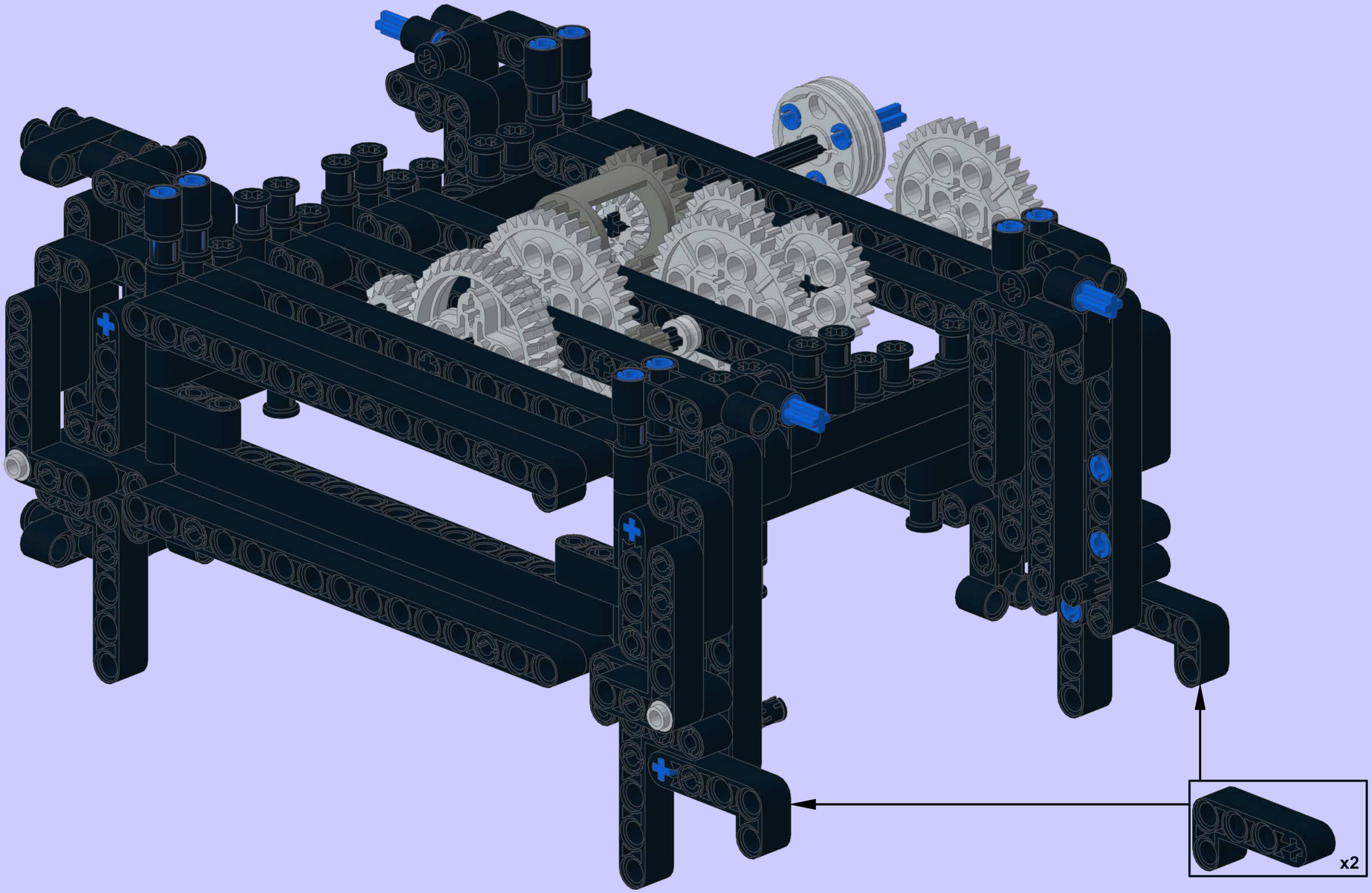

11 2x

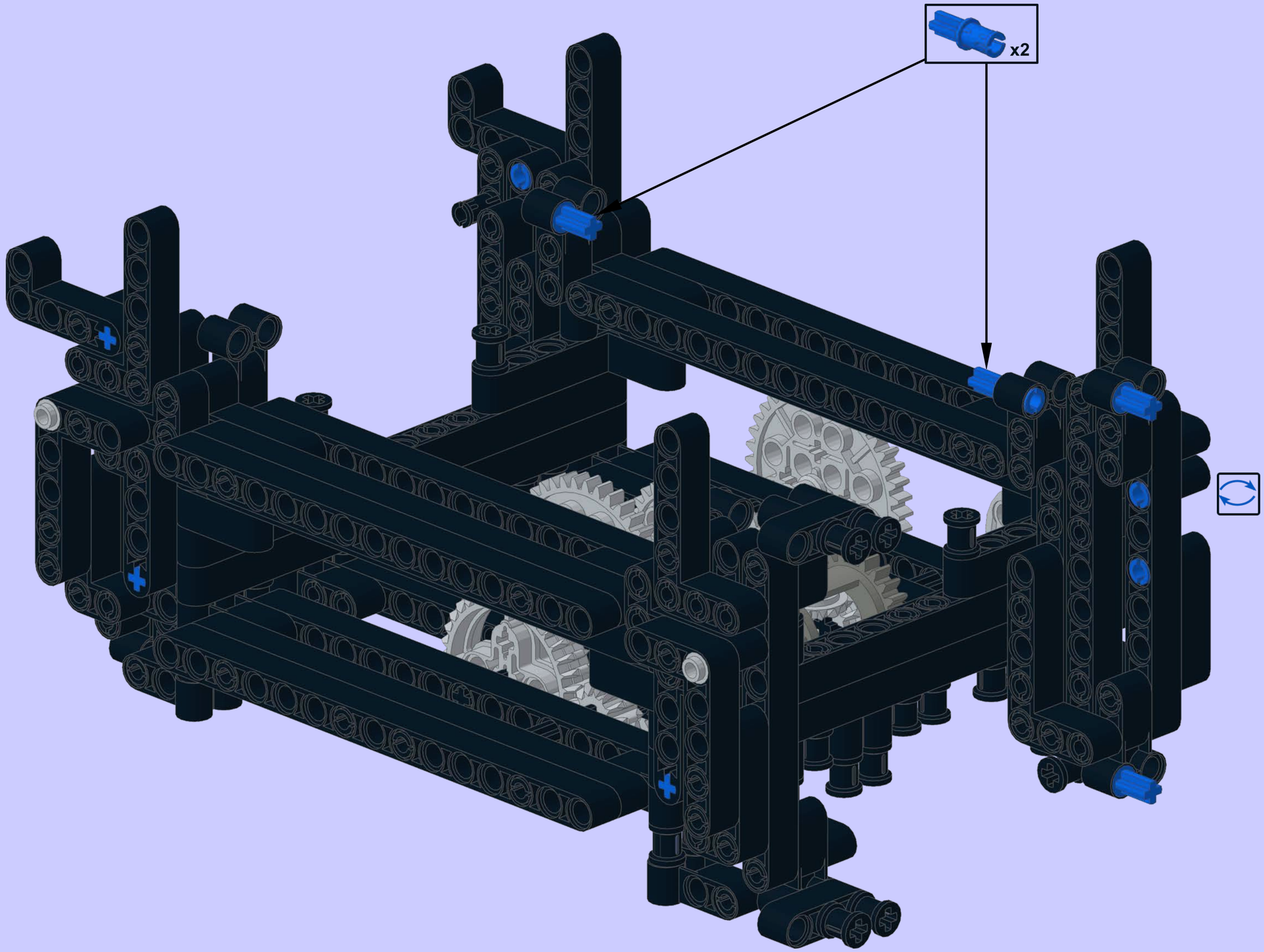

# "Cradle" - extended version - three required

1

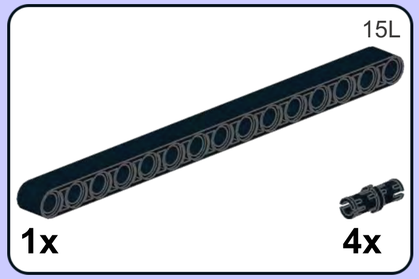


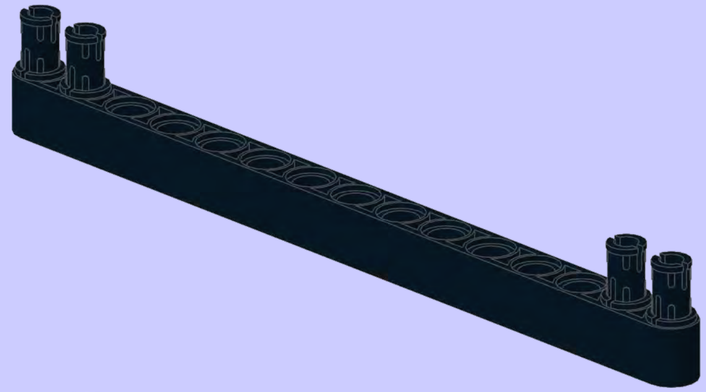

2

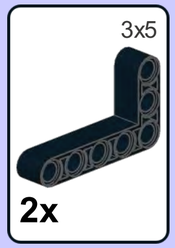


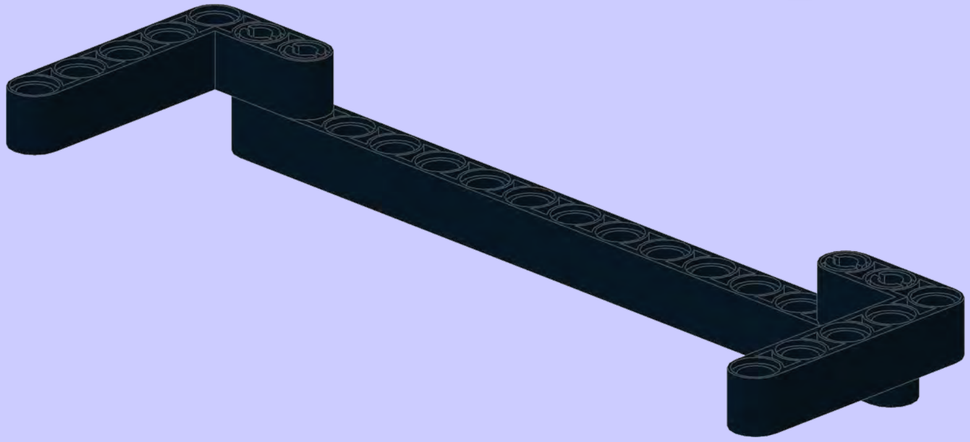

3

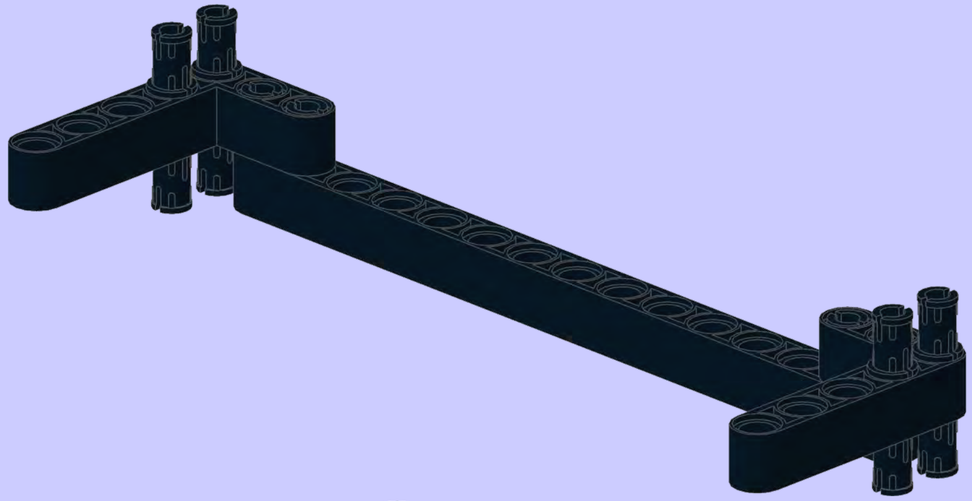

4

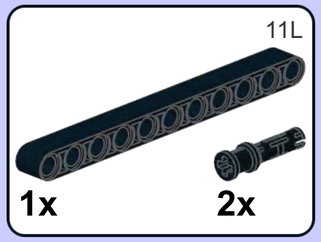


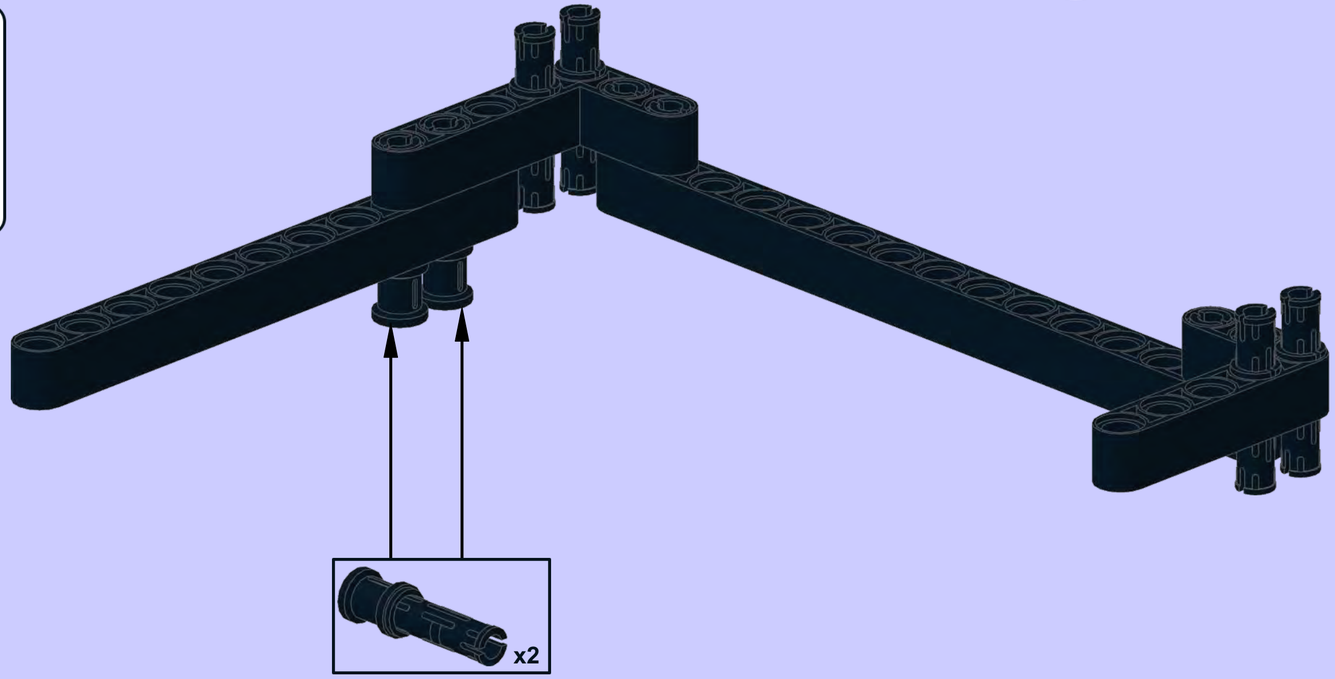

**5**

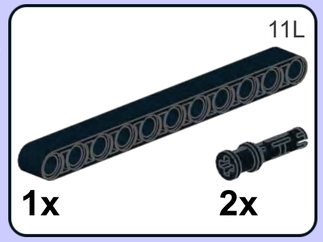


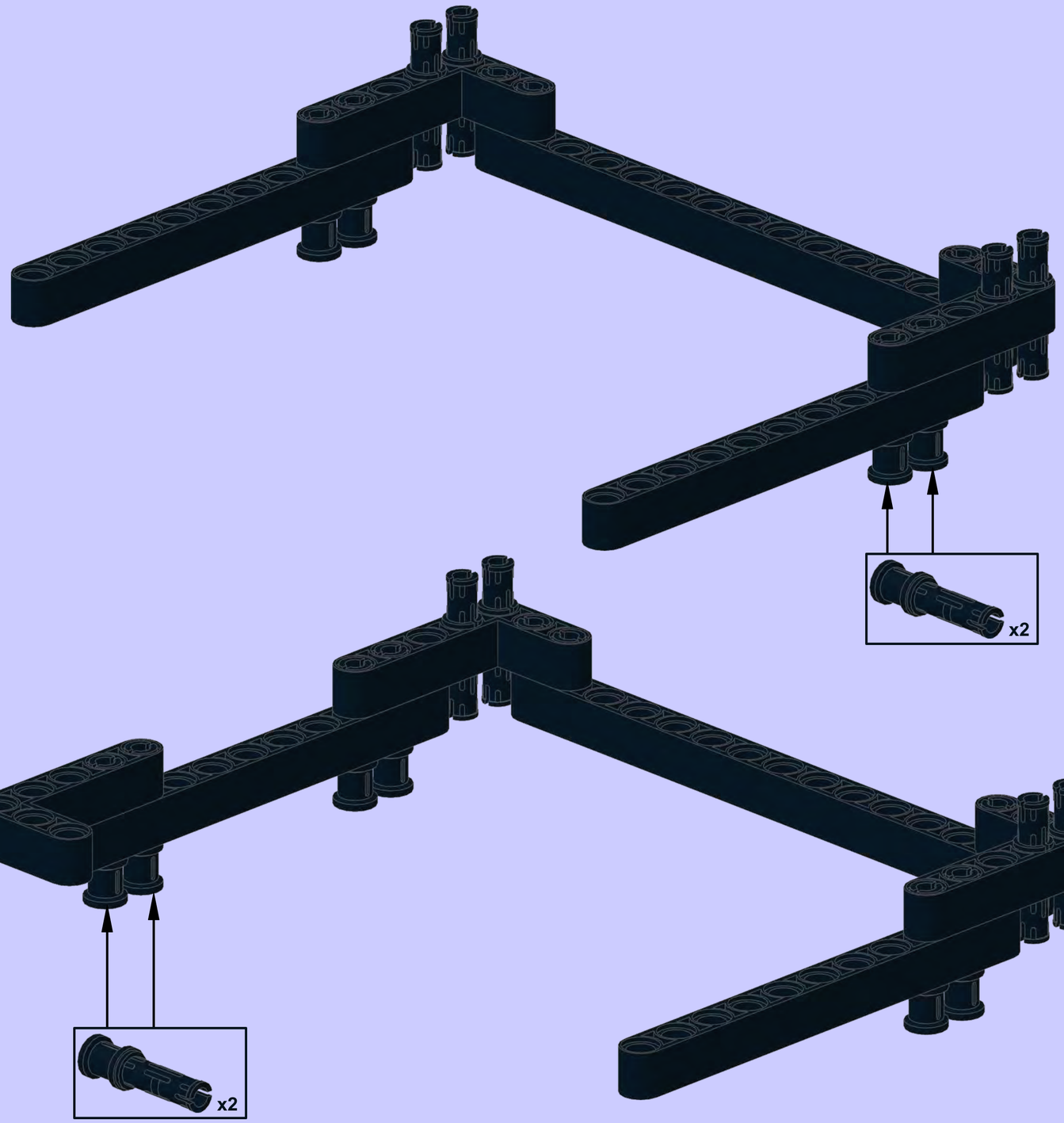


**6**

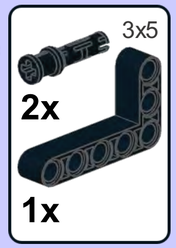

7

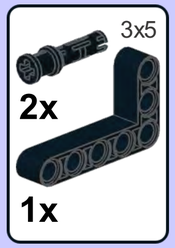


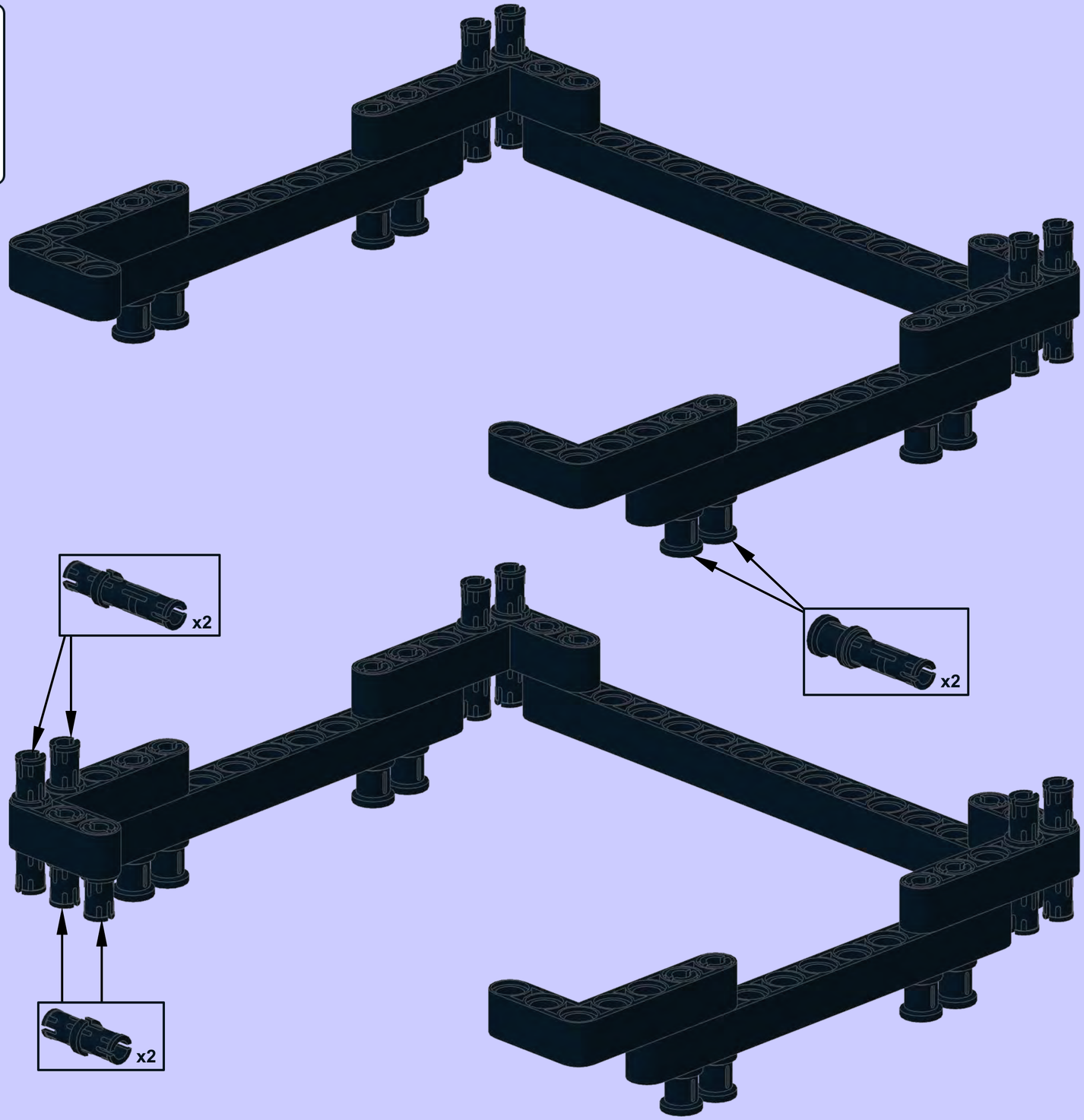


8

**9**

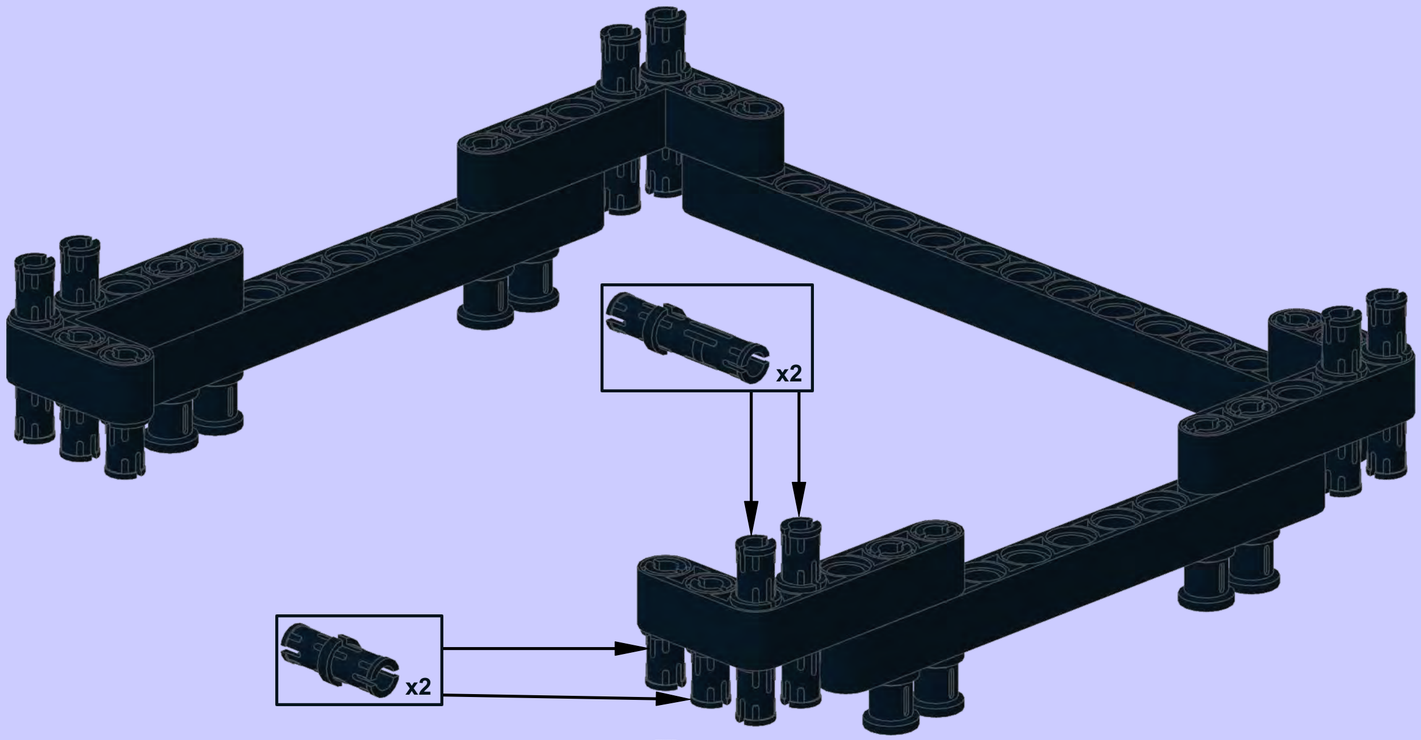


**10**

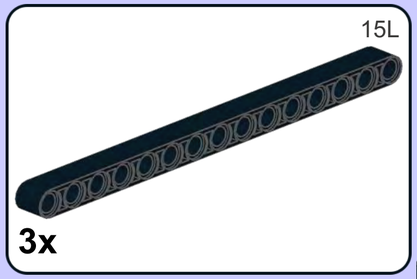


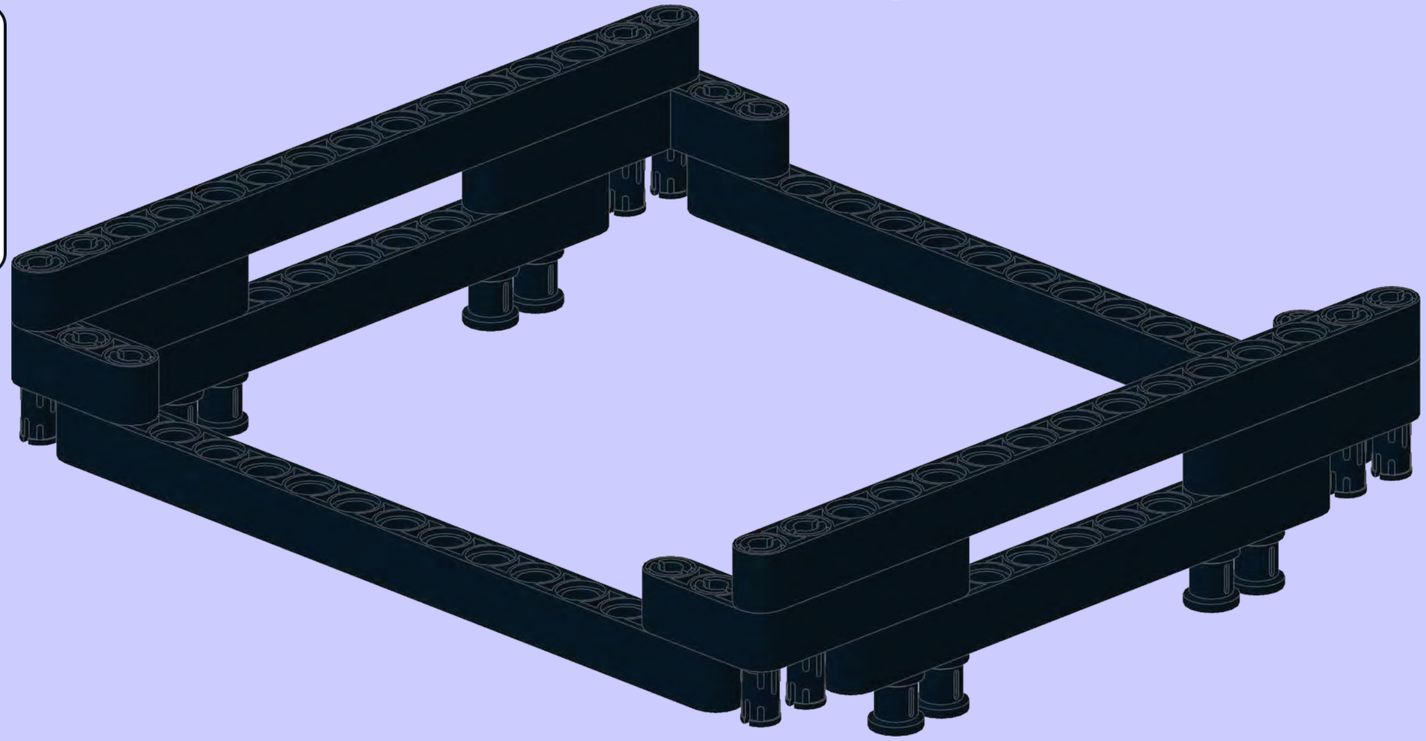

**x3**

# "Base" - extended "dial" version - 3 required

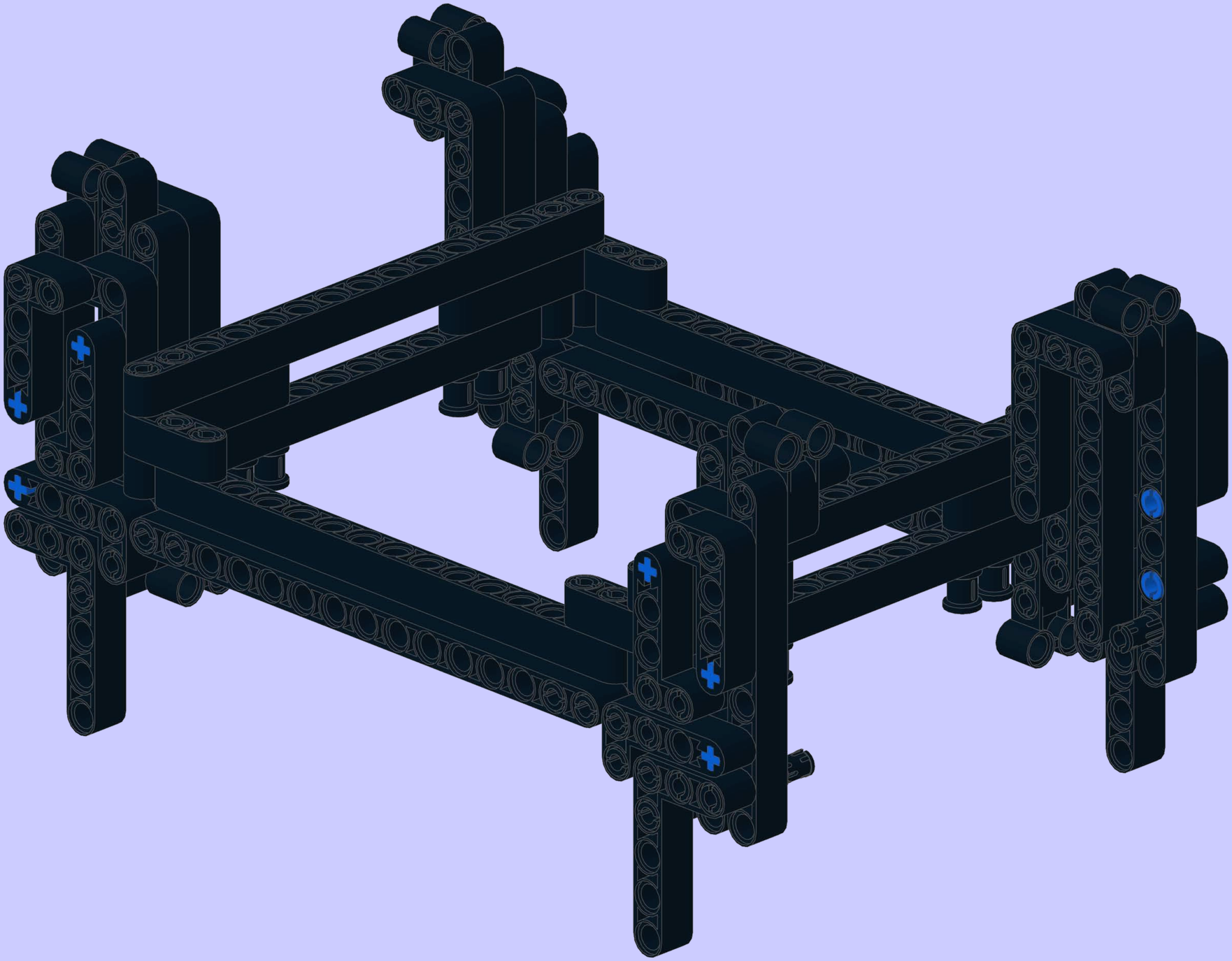

x3

1

## Left Top Front (LTF) rack - using extended base

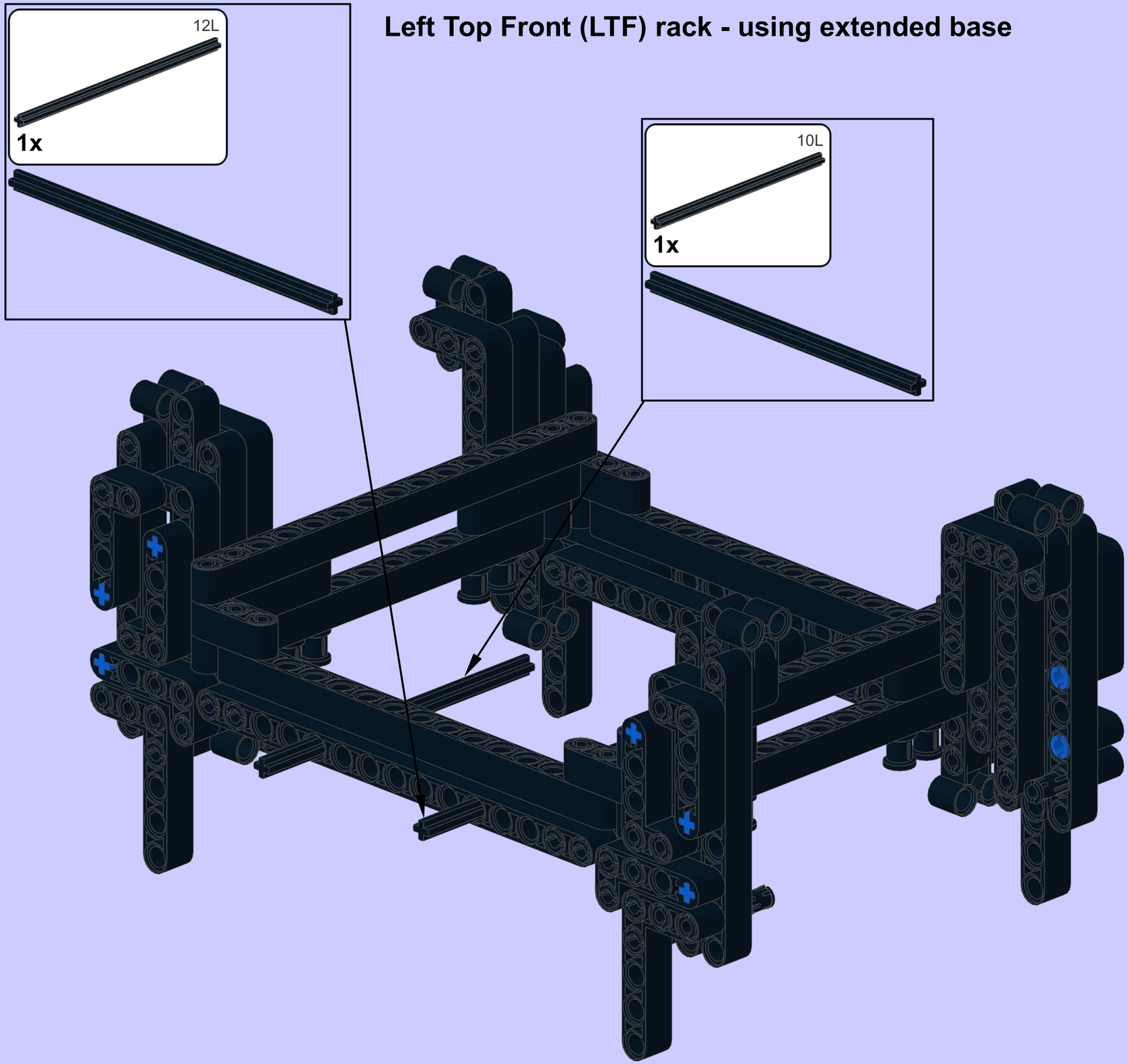

2

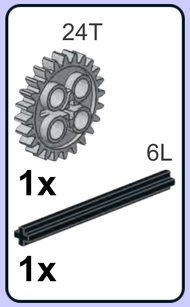


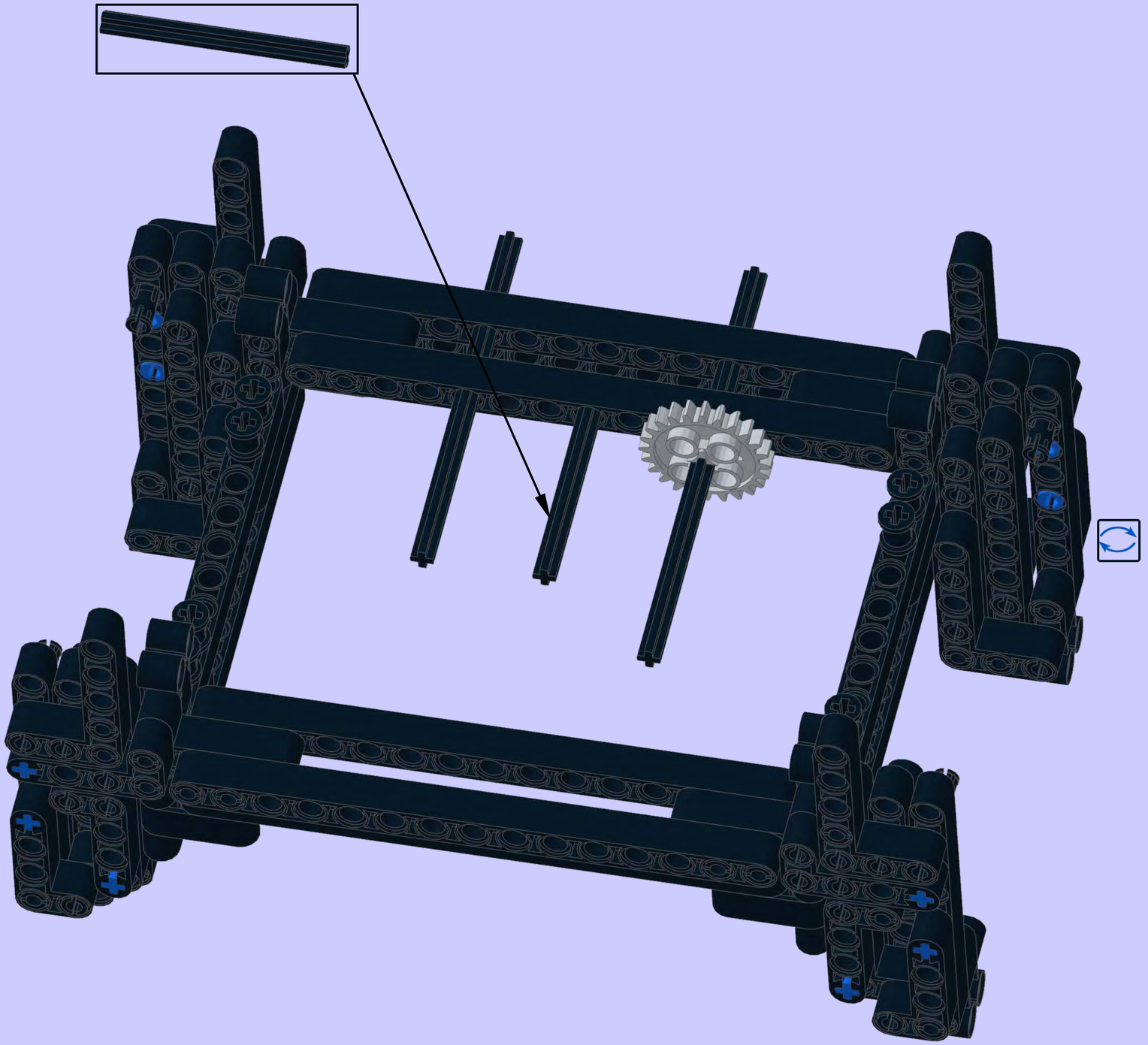

3

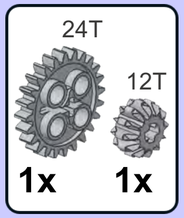


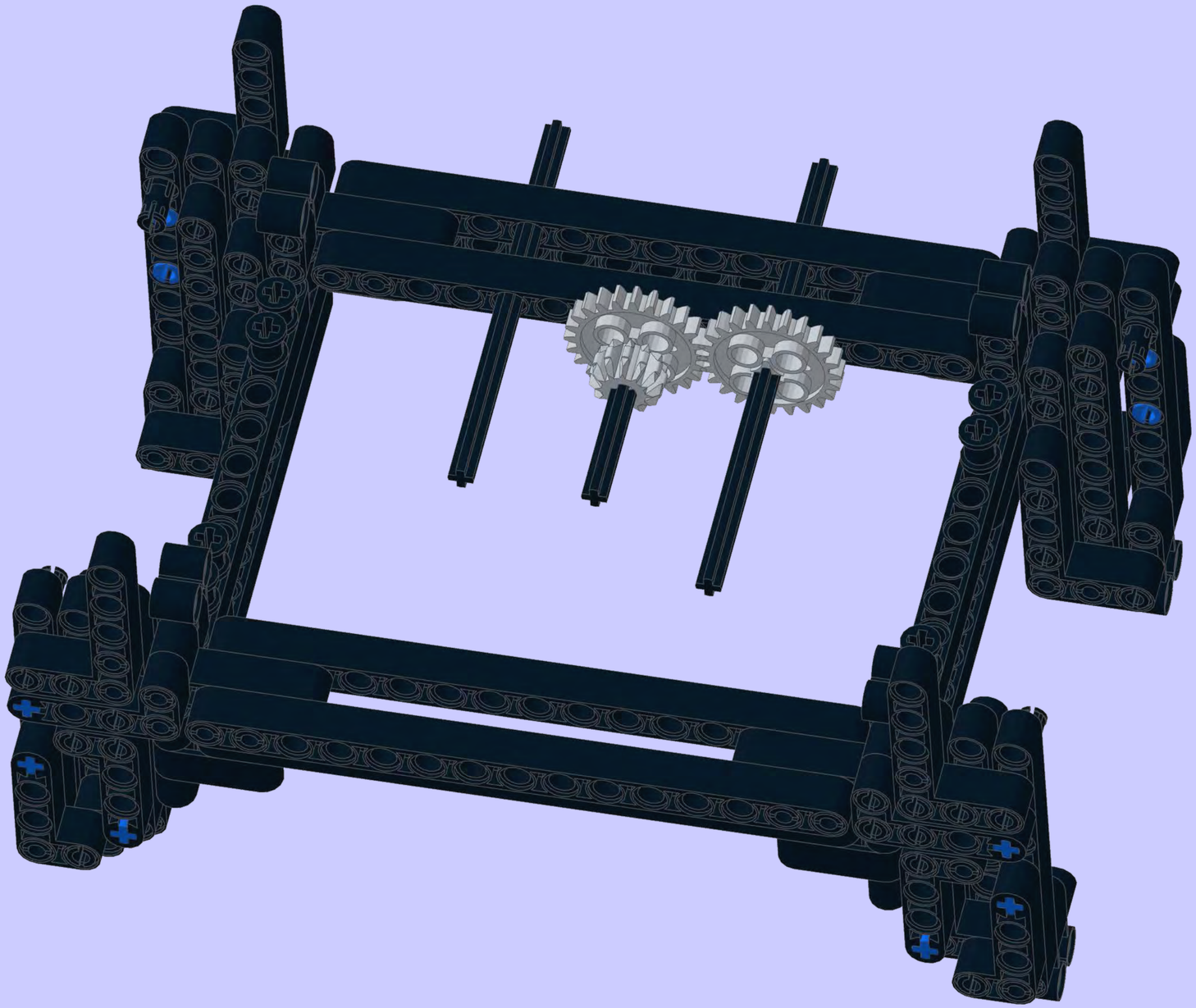

4

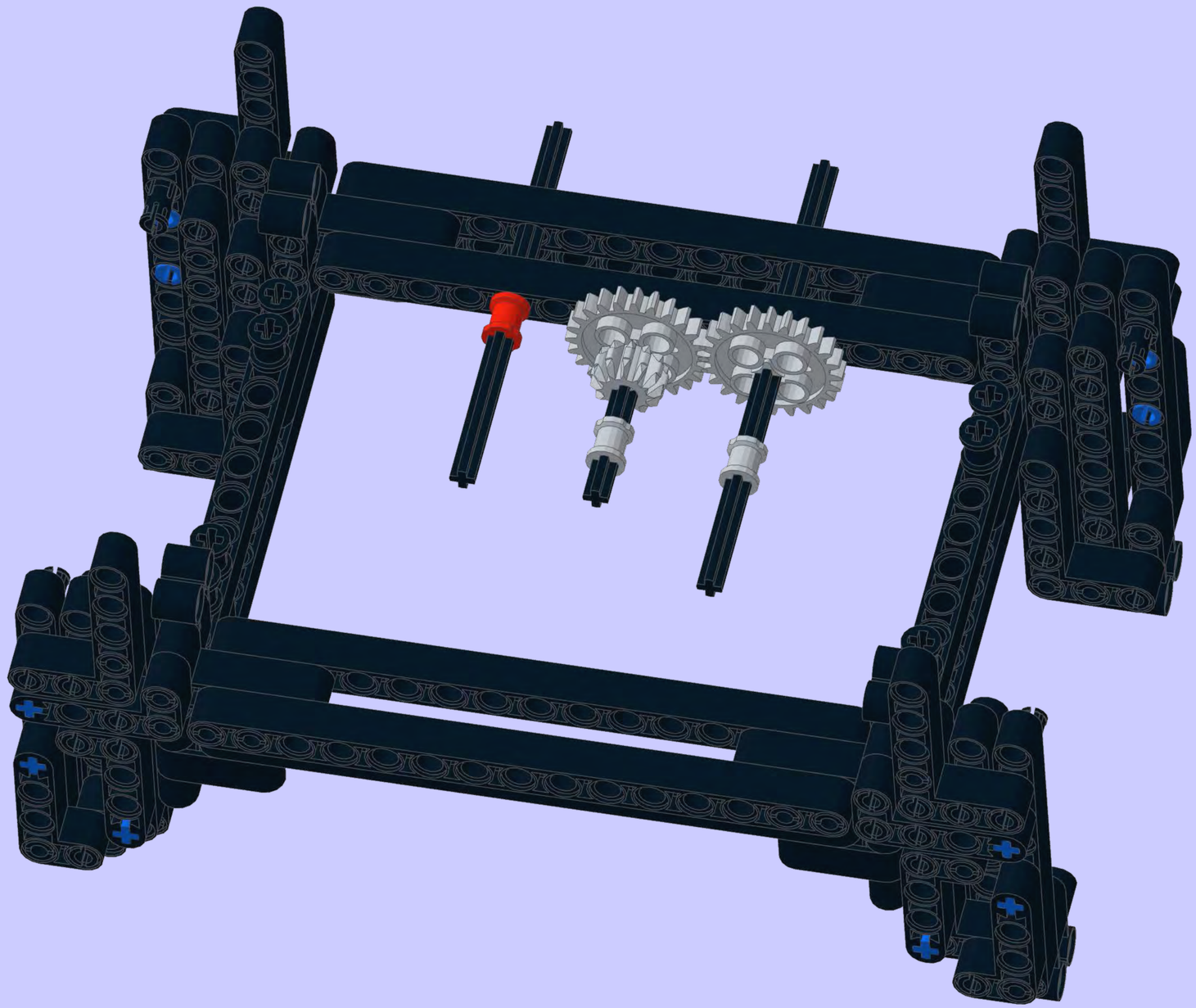

5

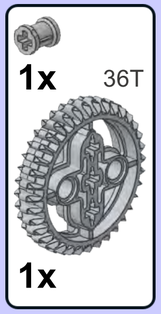


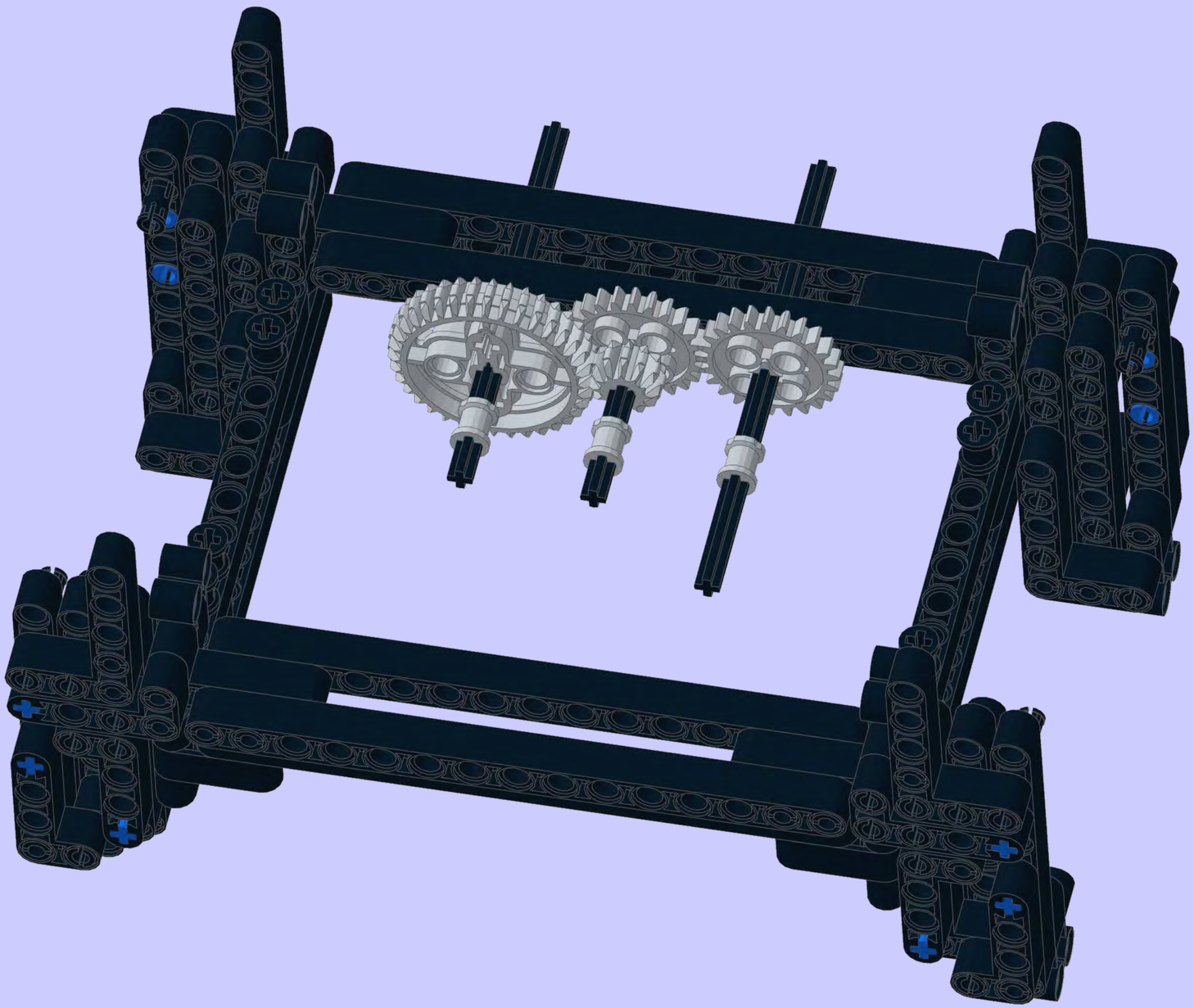

6

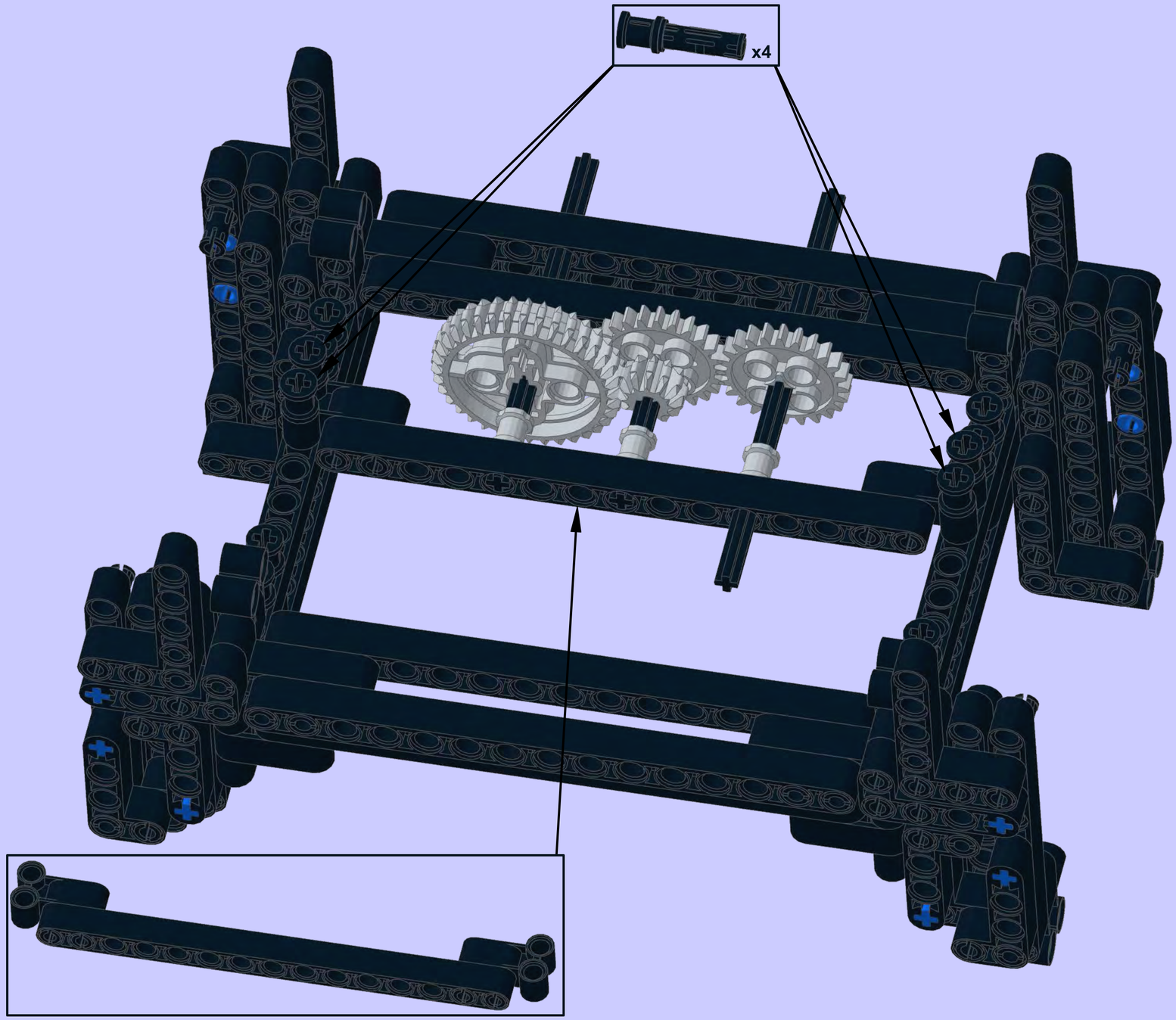

7

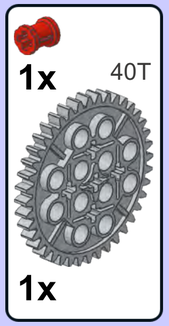


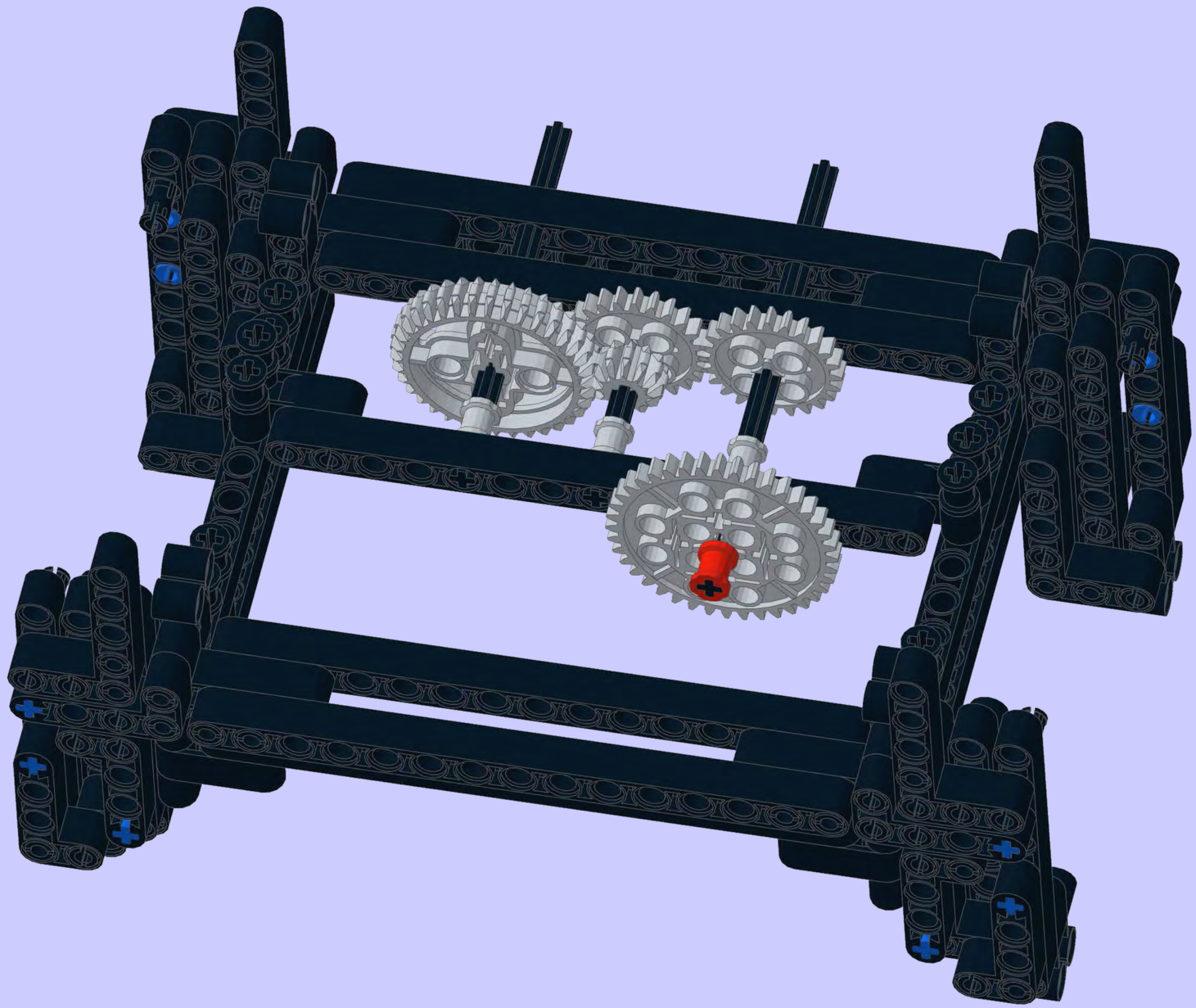

8

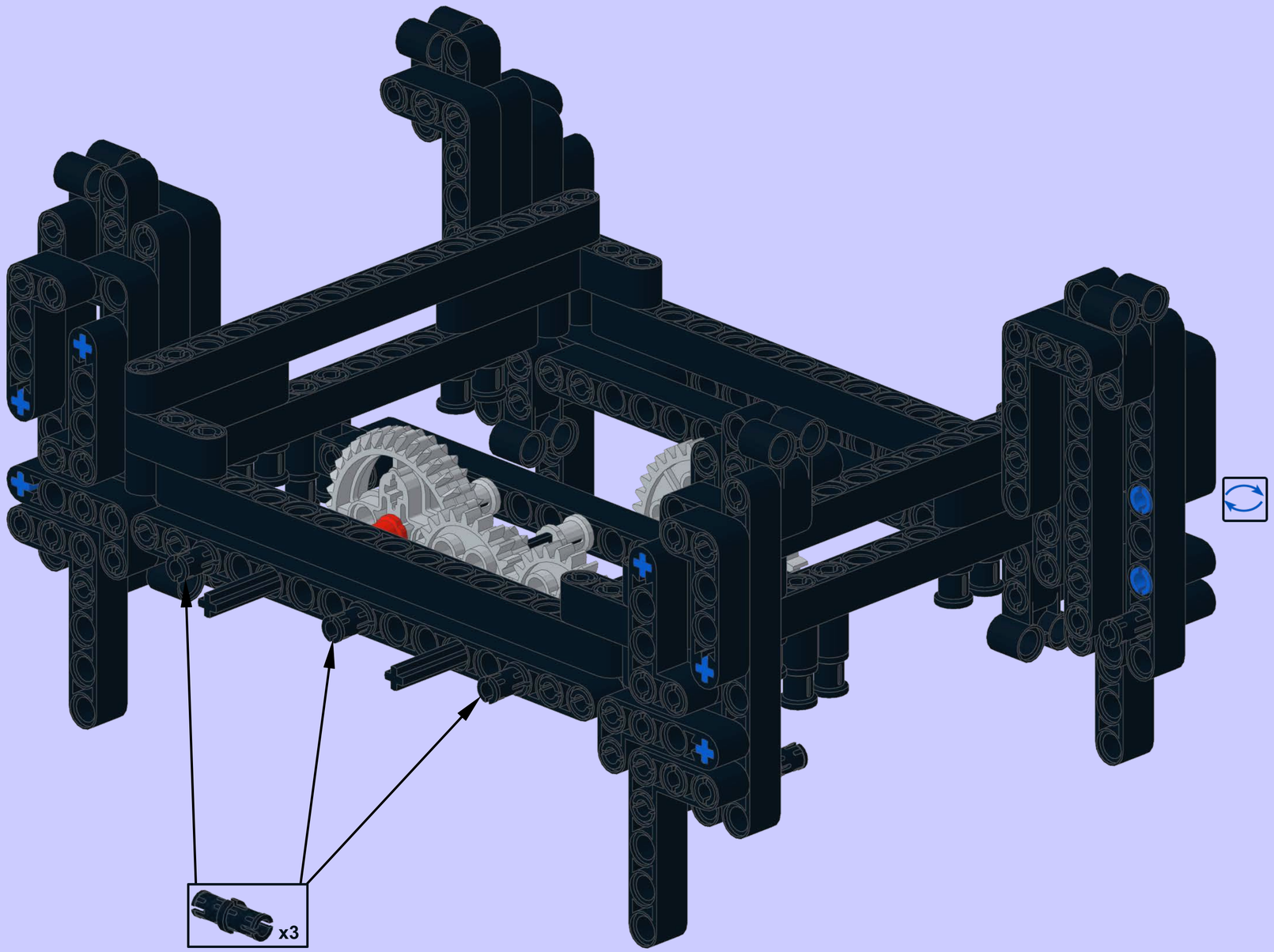

9

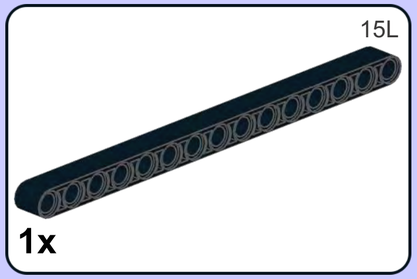


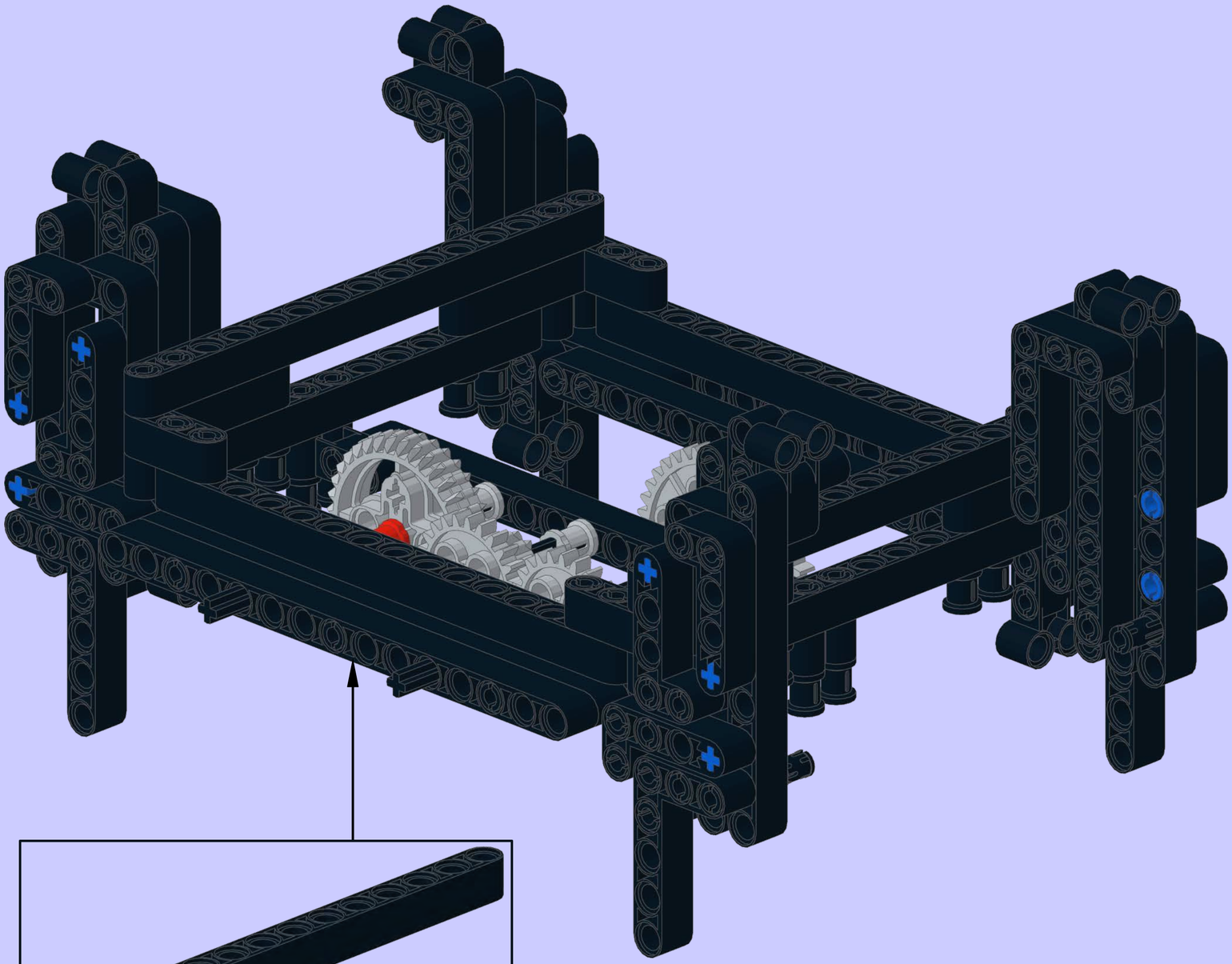

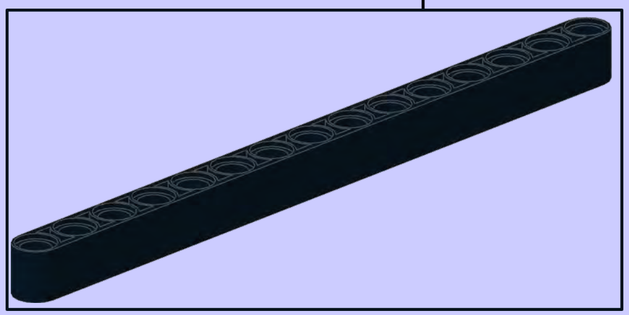

10 6x

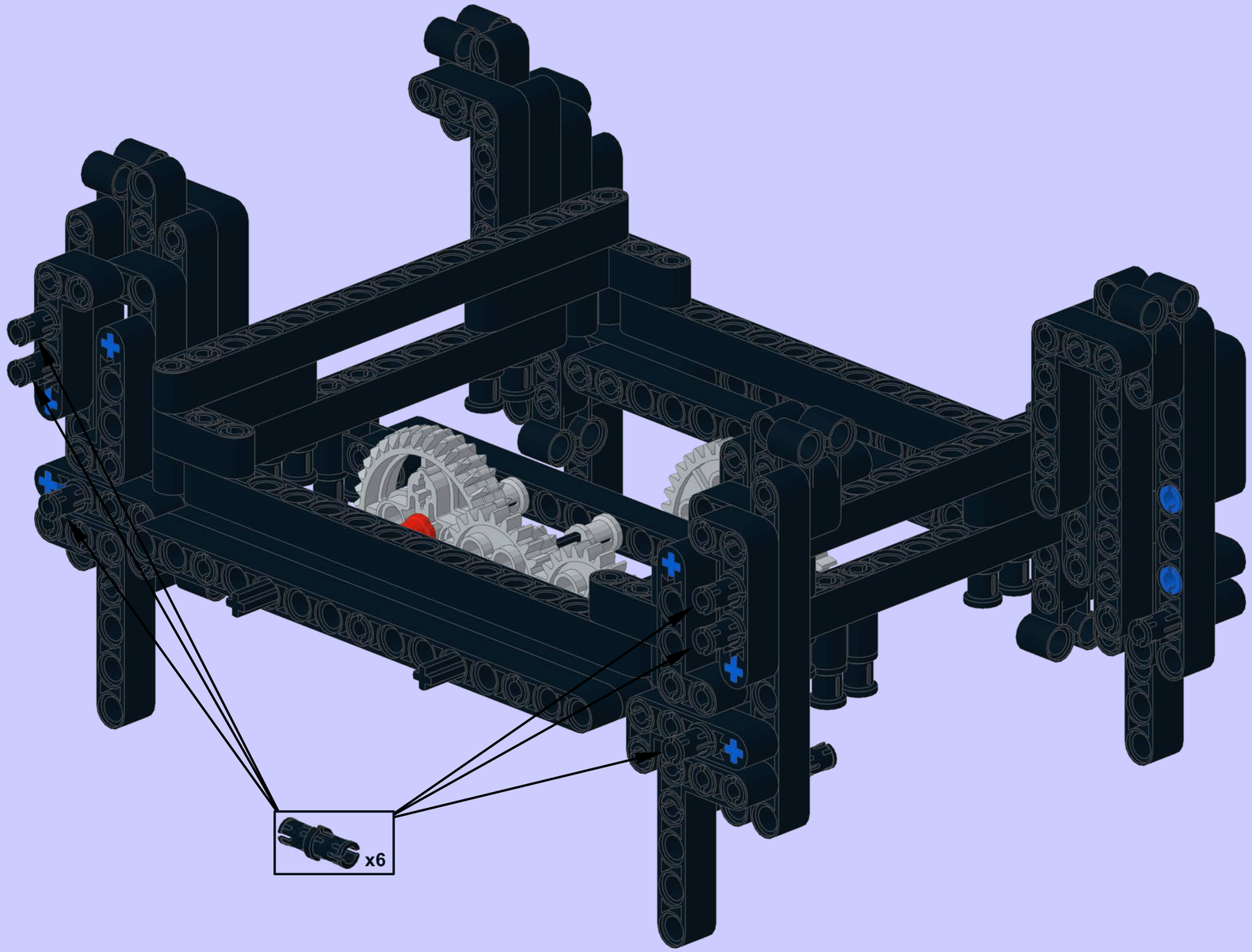

11

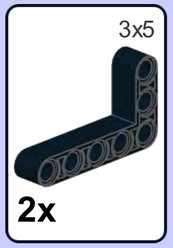


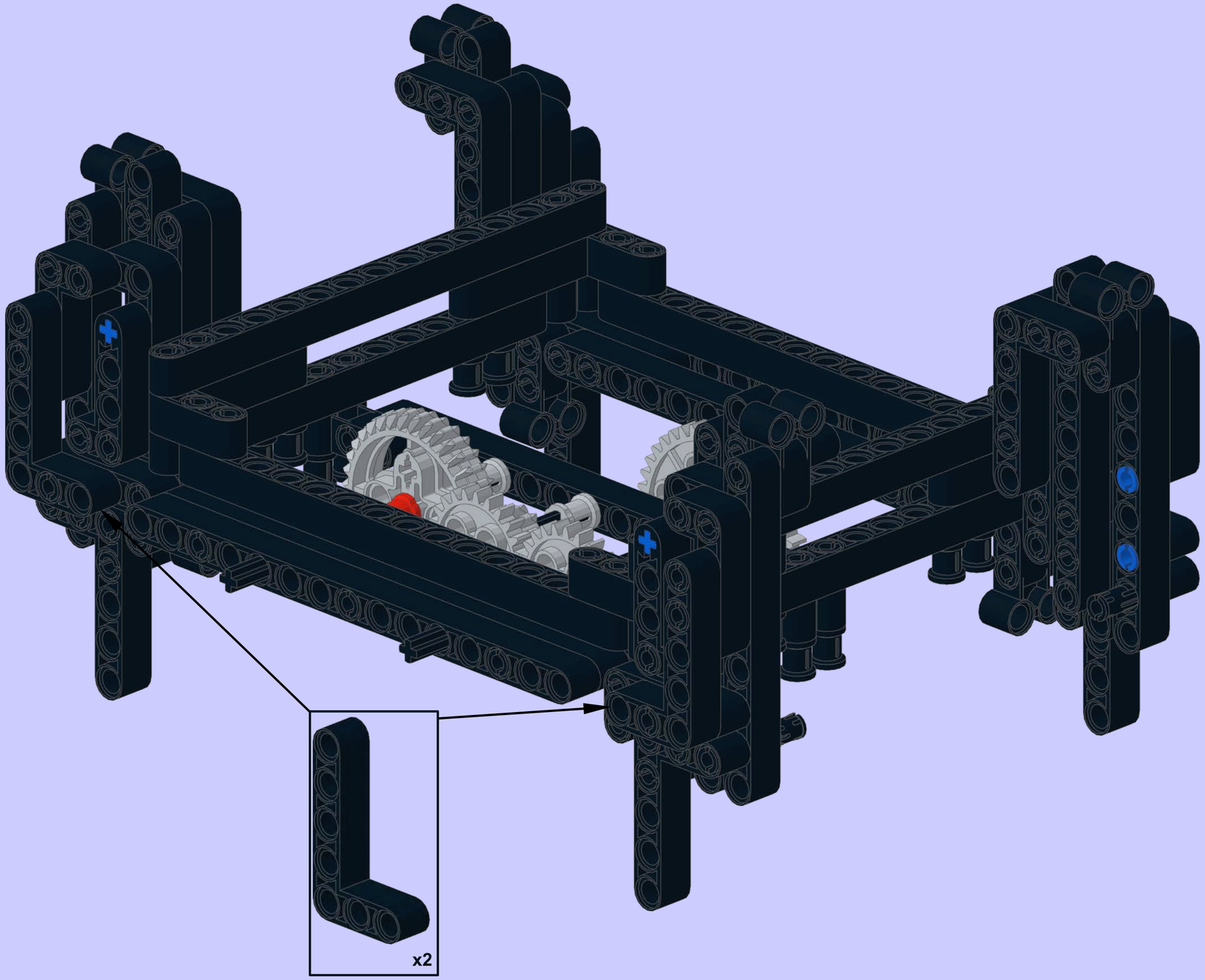

12

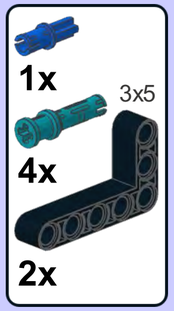


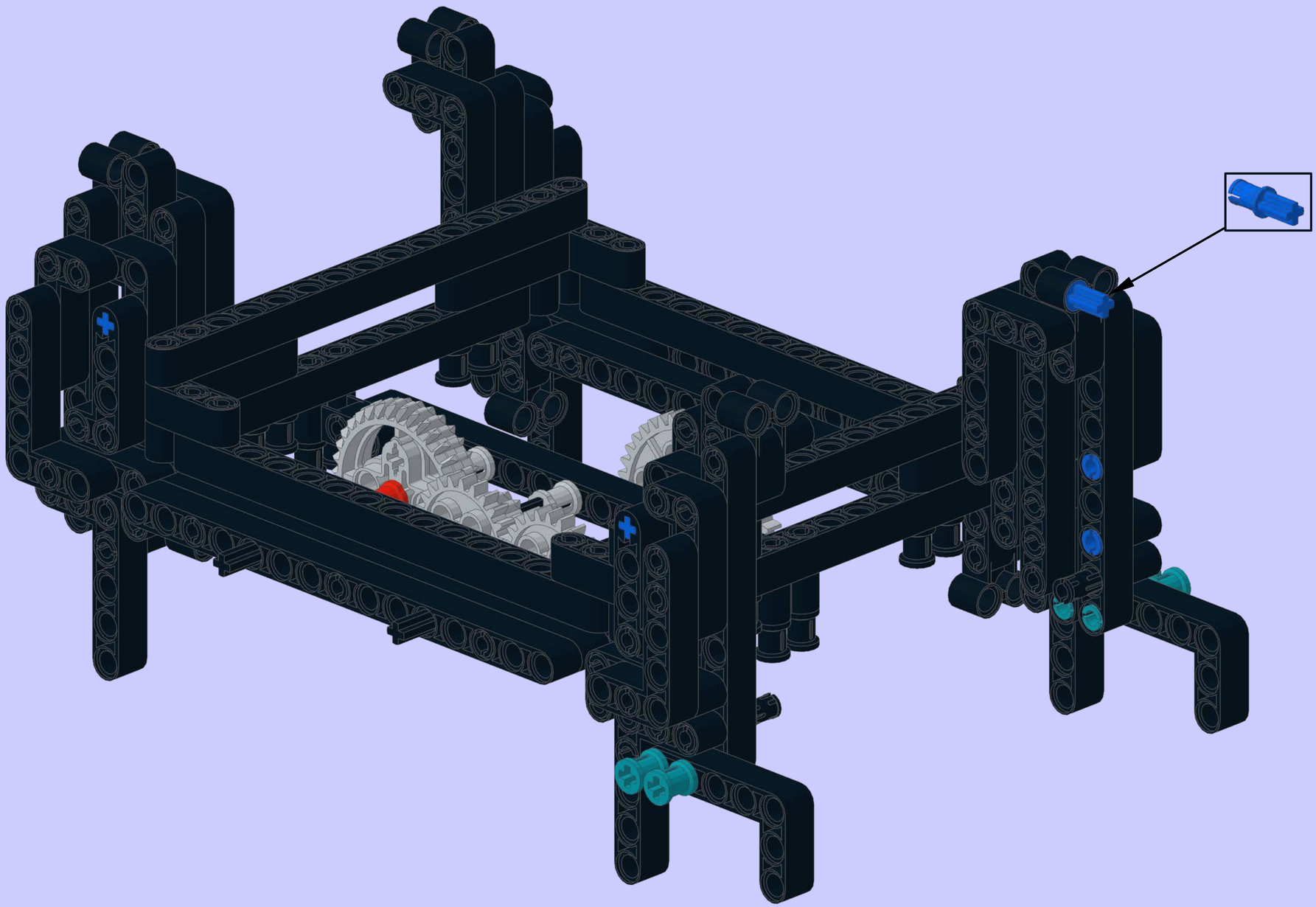

13

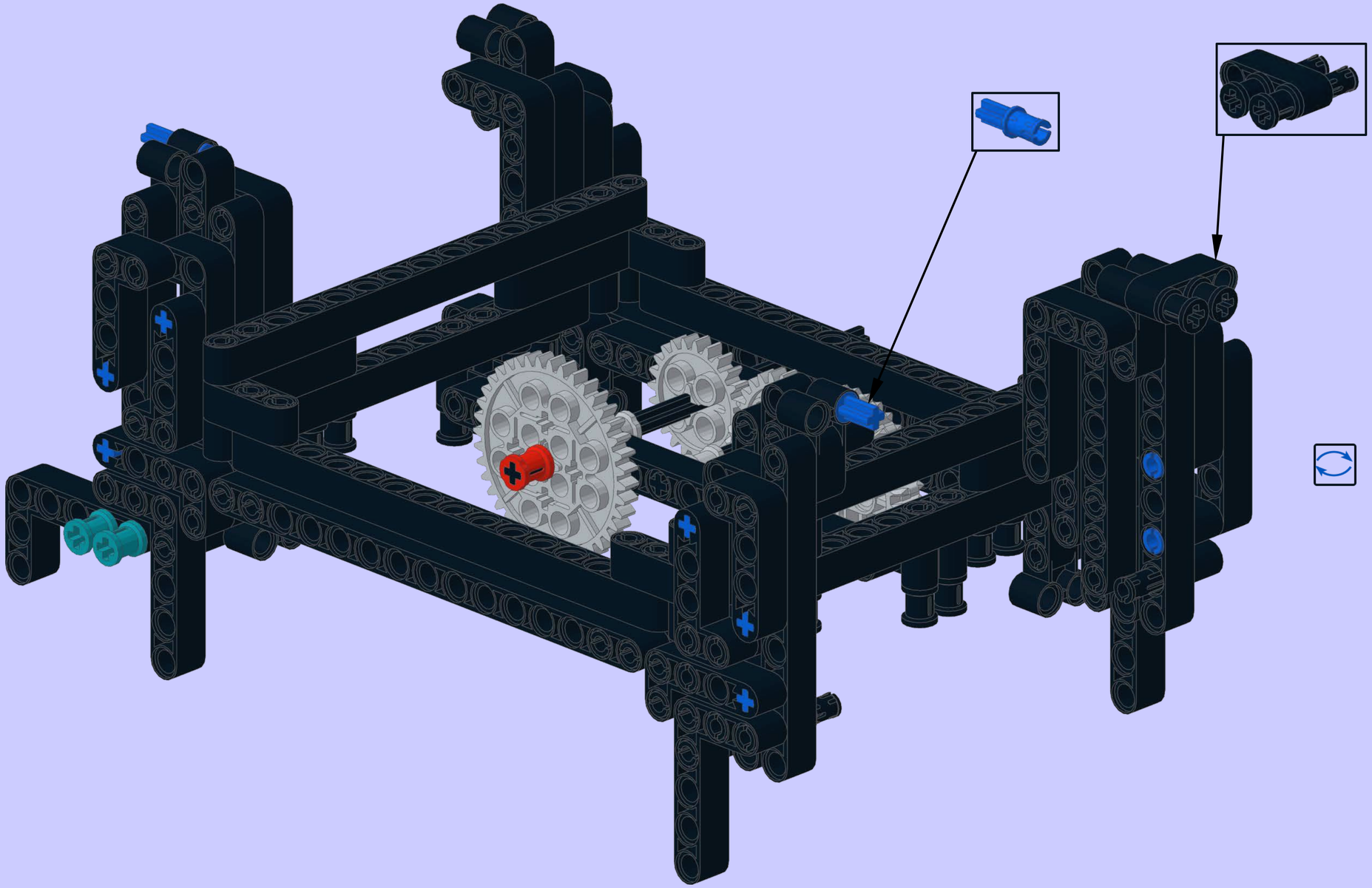

# Left Top Front (LTF) calculator - LTB drives the Saros dial, LTB divided by 4 is sent below

**1**

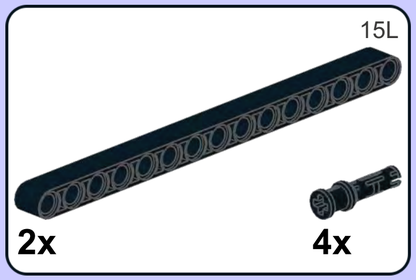


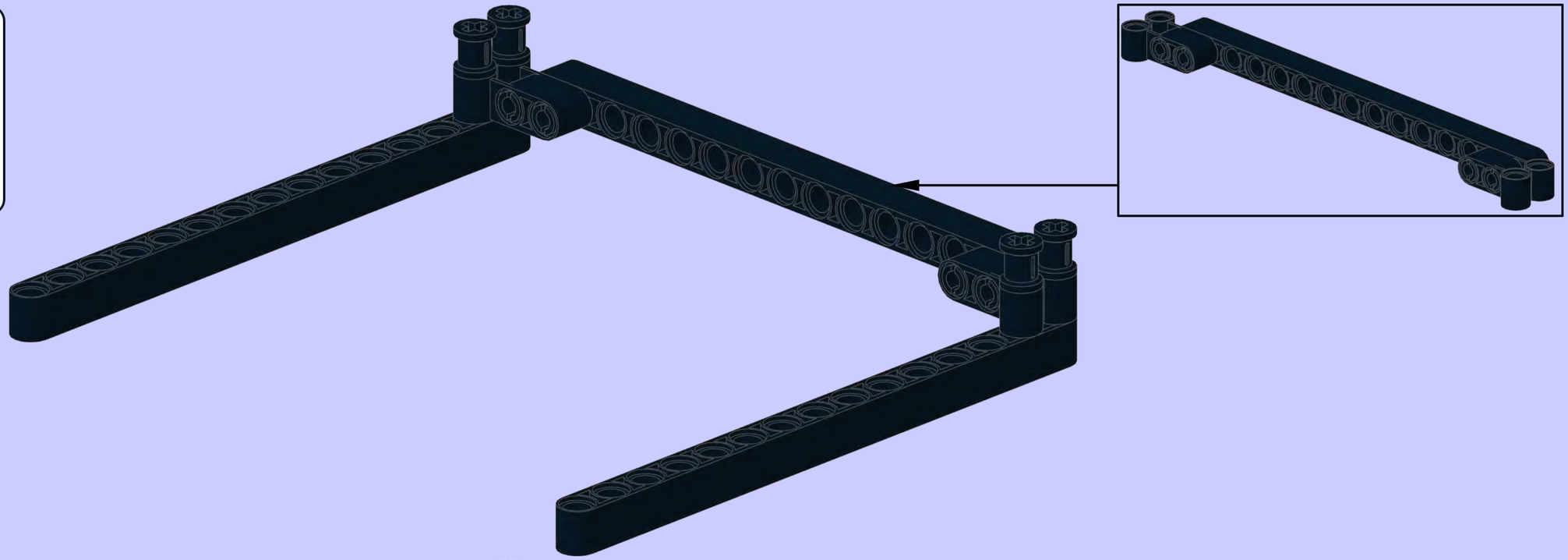

**2**

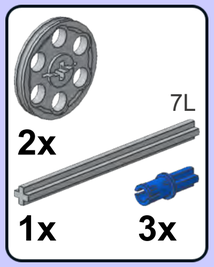

**3**

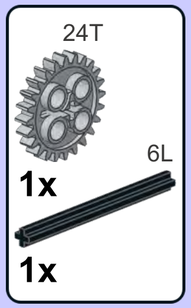


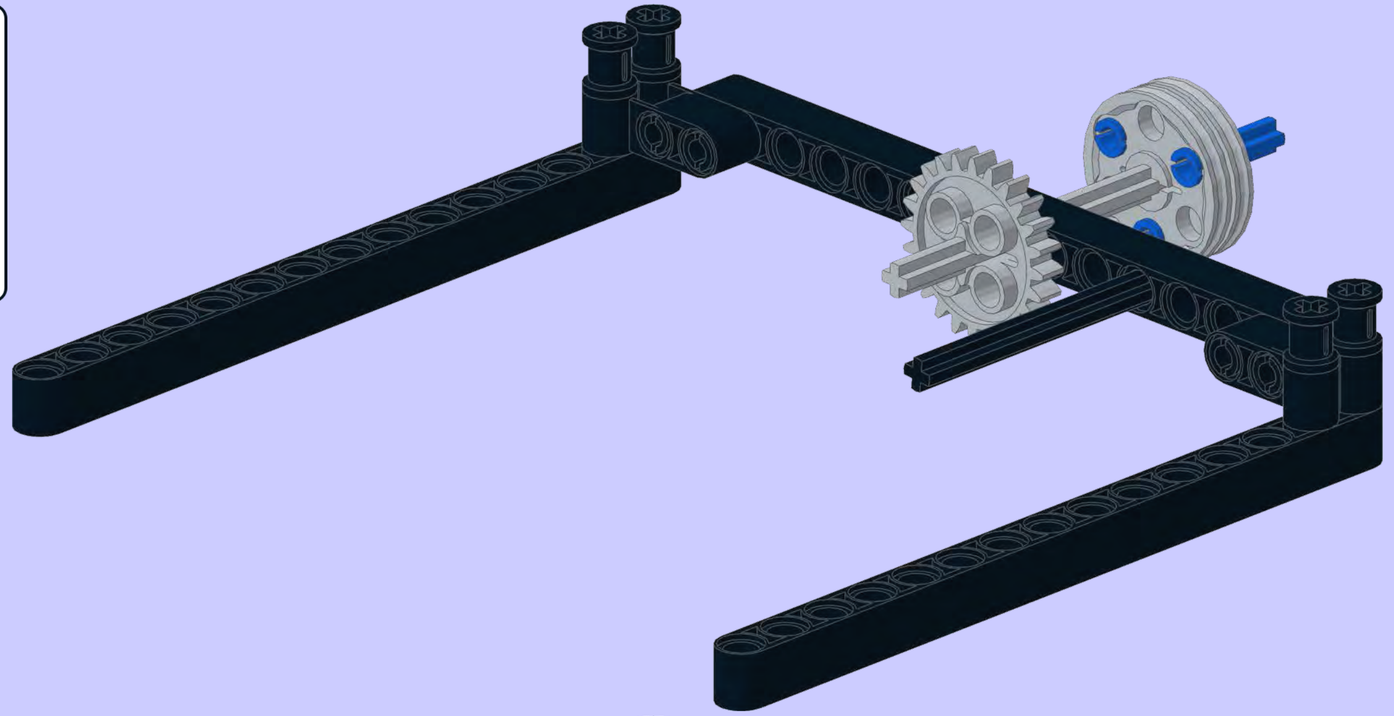

**4**

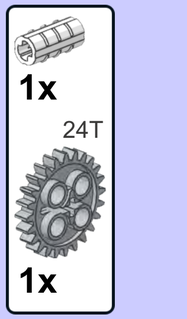


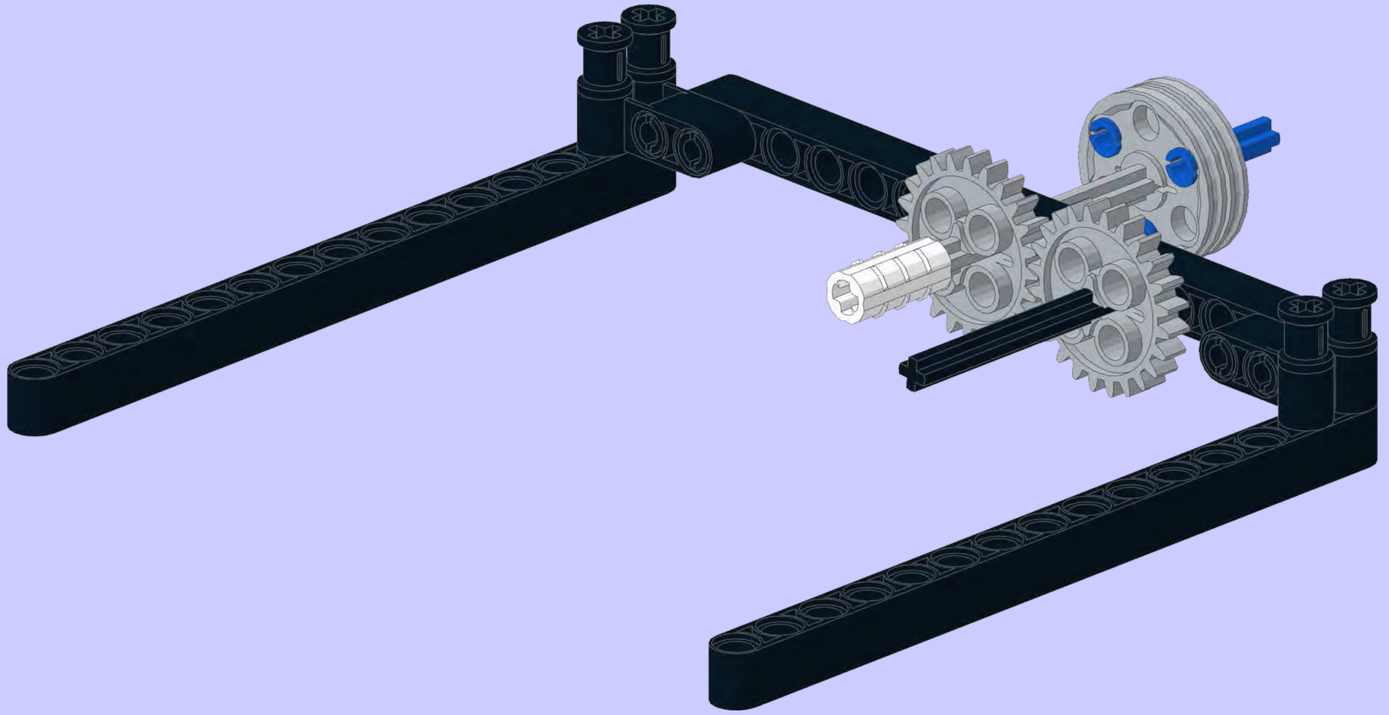

**5**

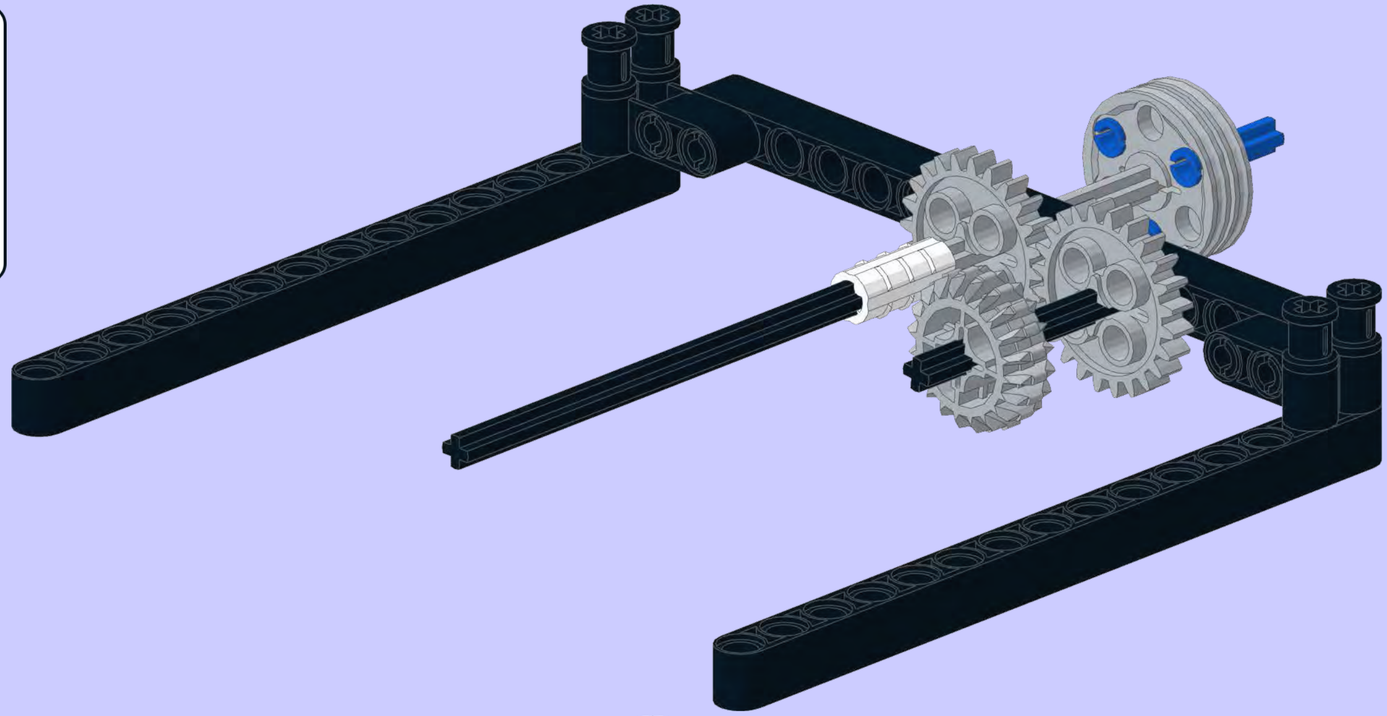

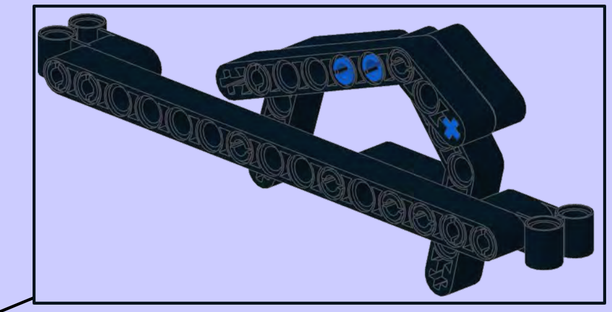

**6**

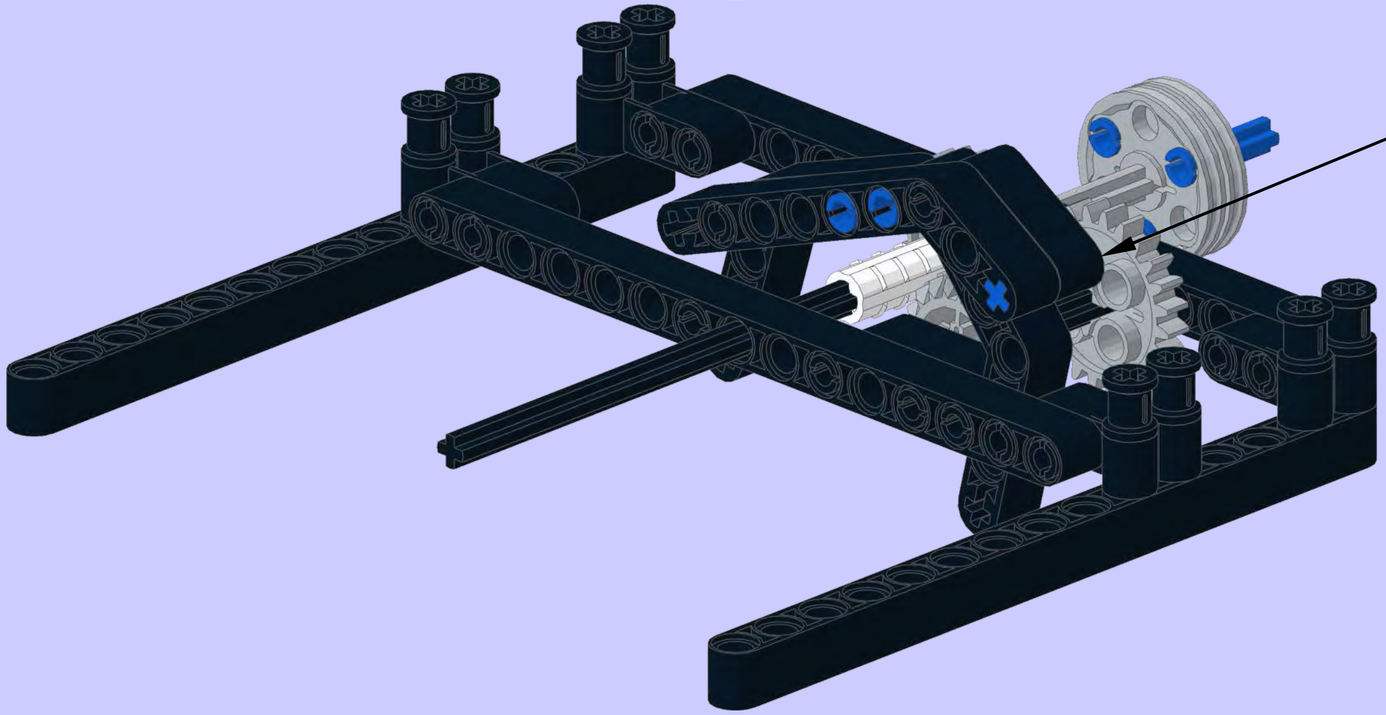

**7**

5L

**1x**

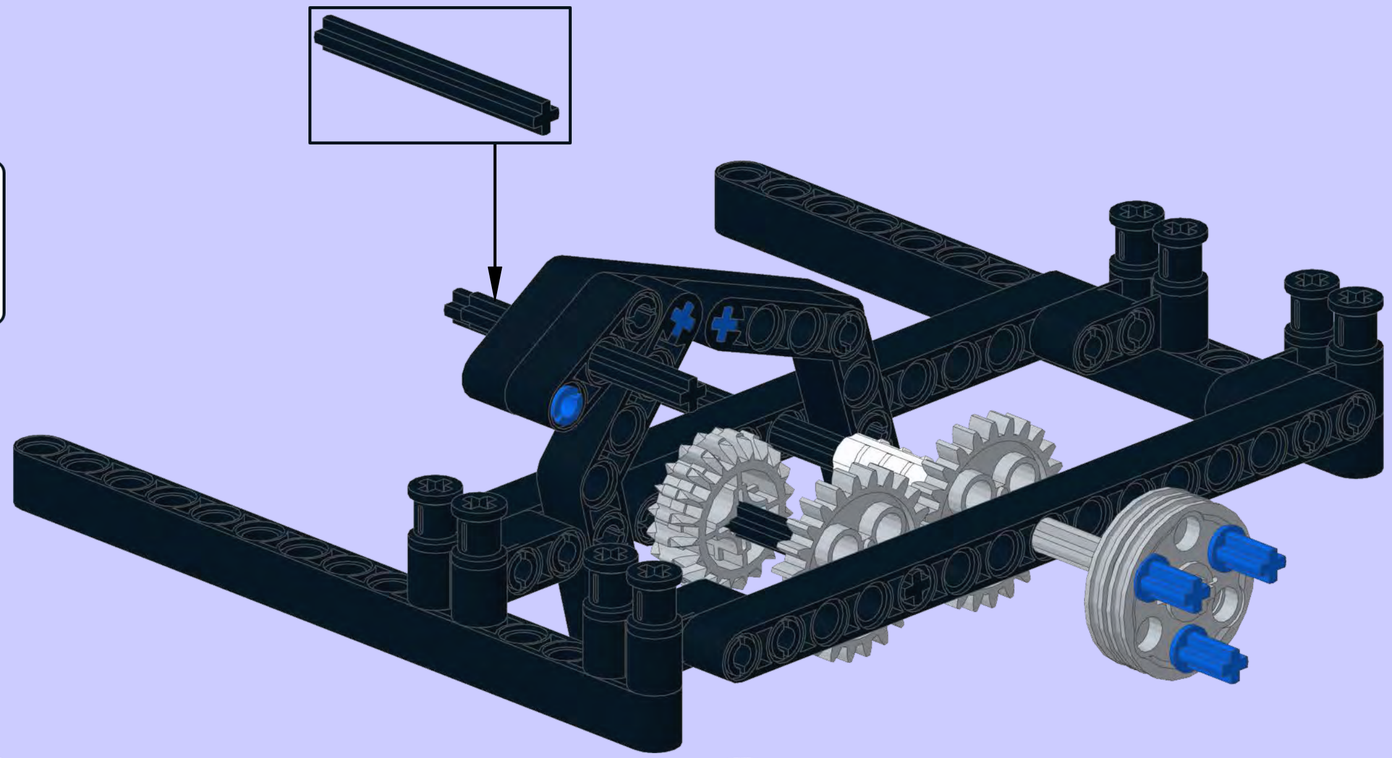

**8**

**1x**

40T

**1x**

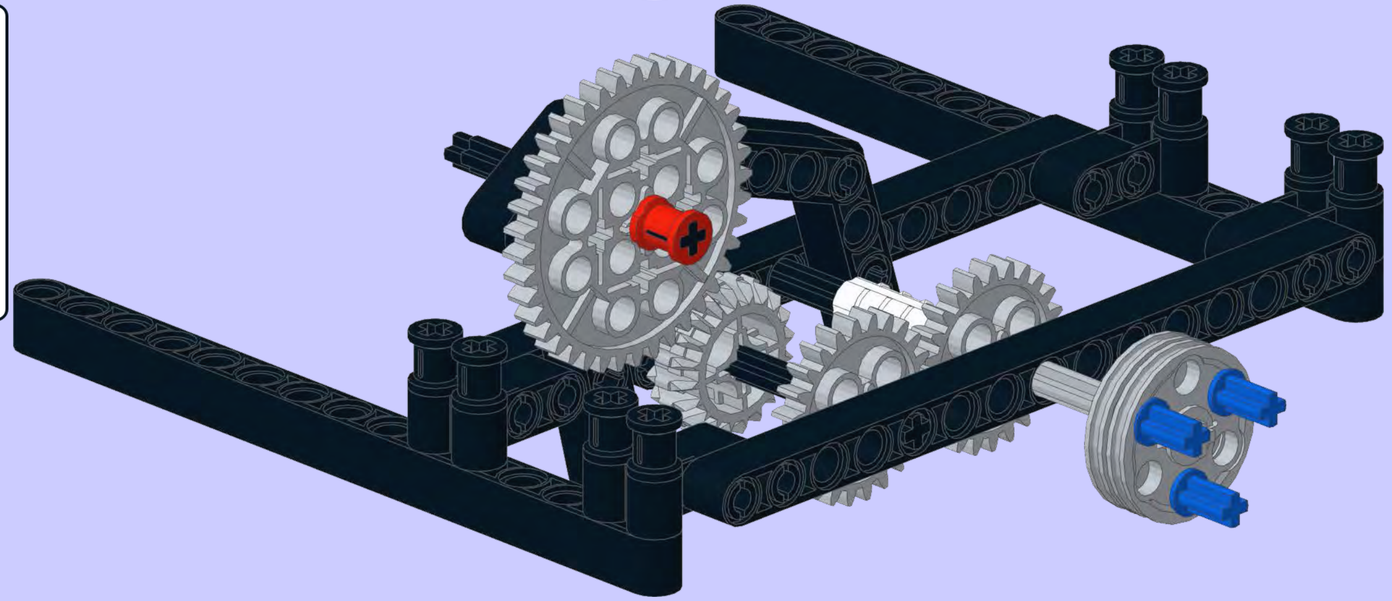

**9**

3L

**1x**

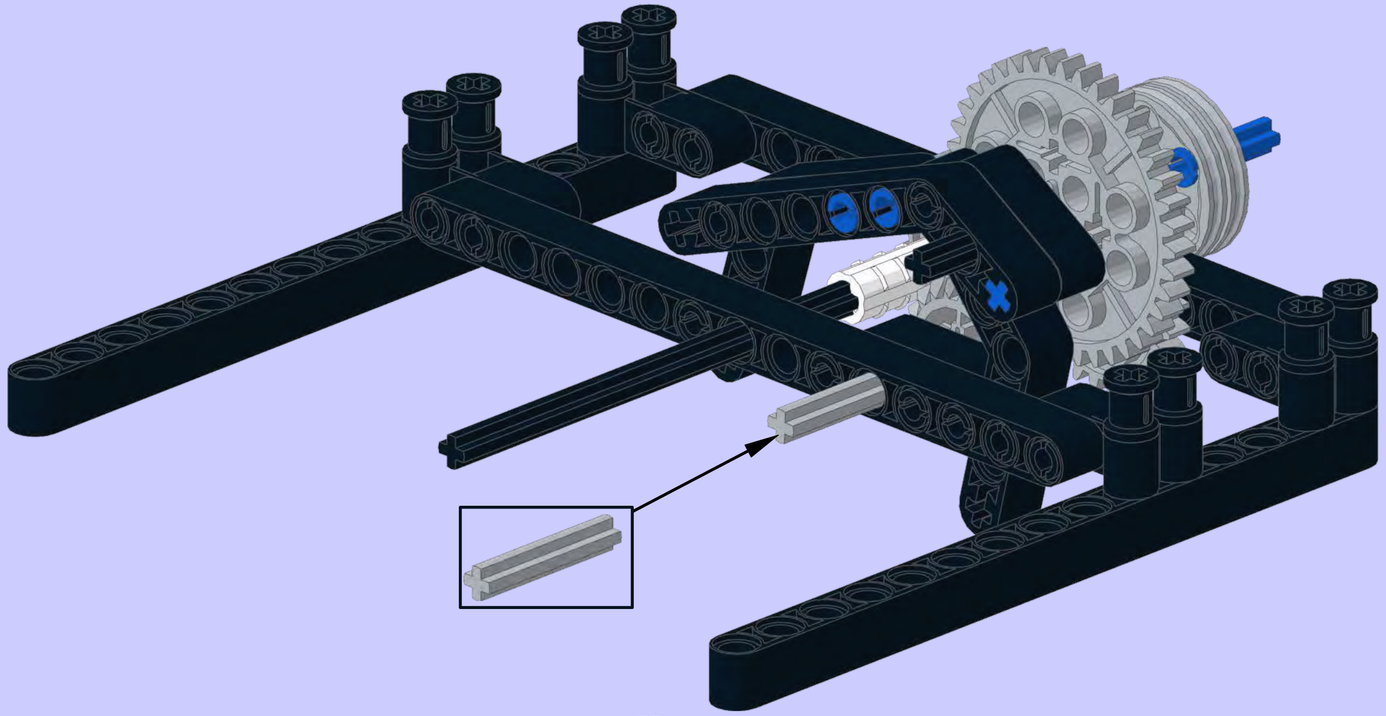

**10**

20T

**1x**

40T

**1x**

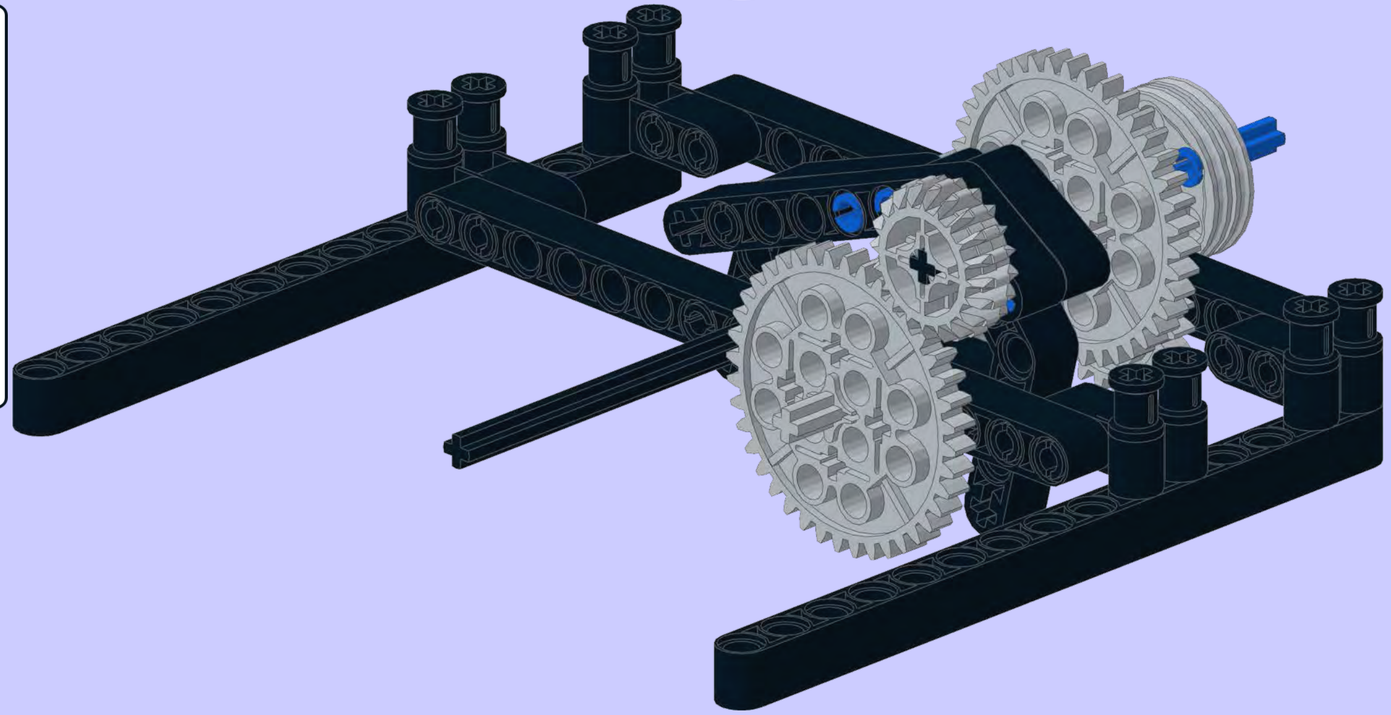

**11**

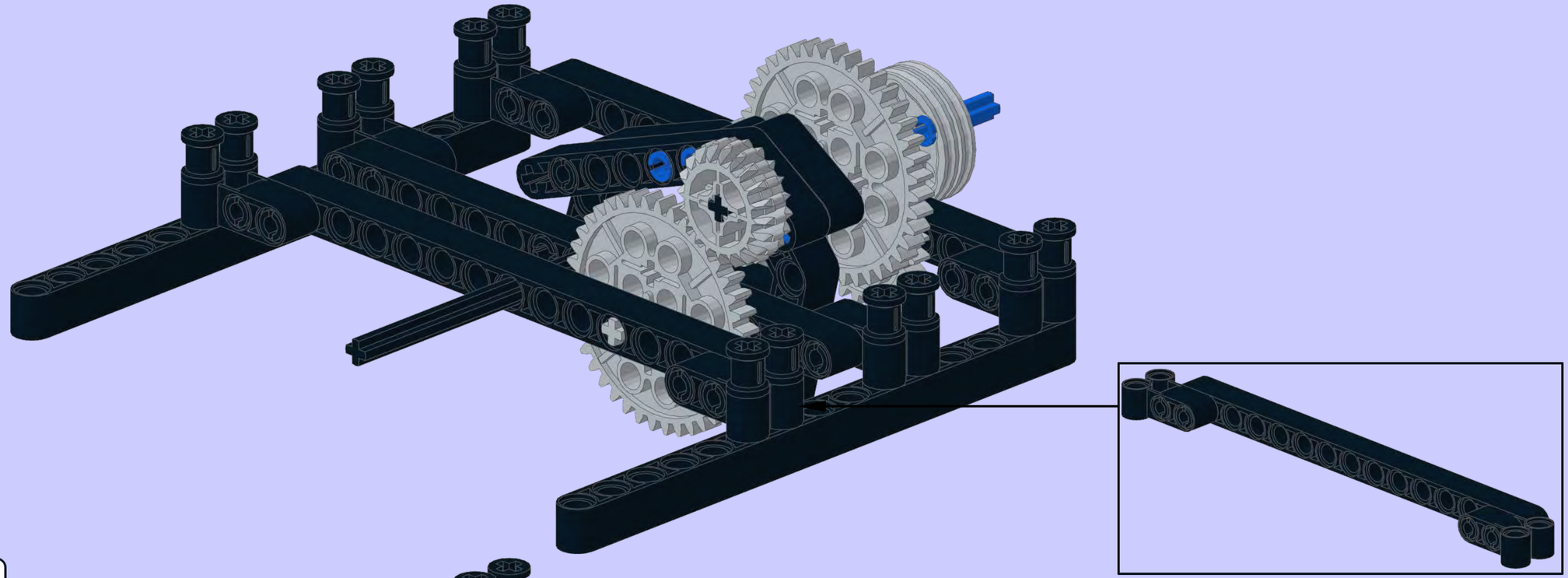

**12**

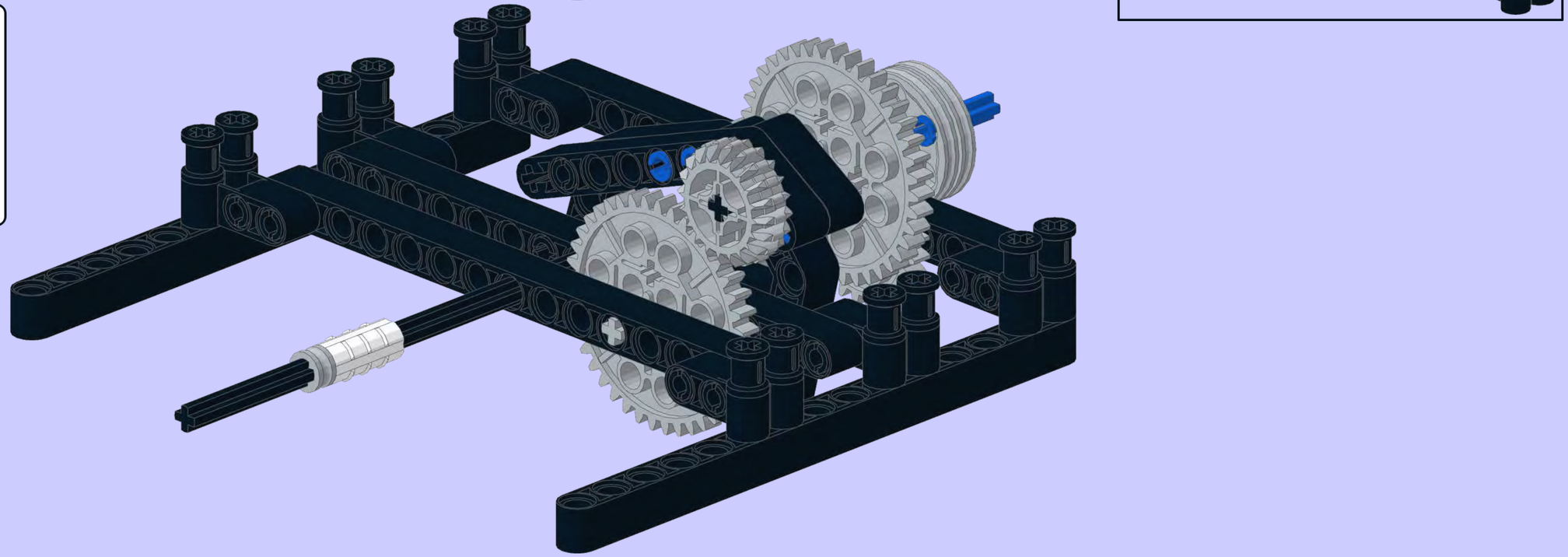

13

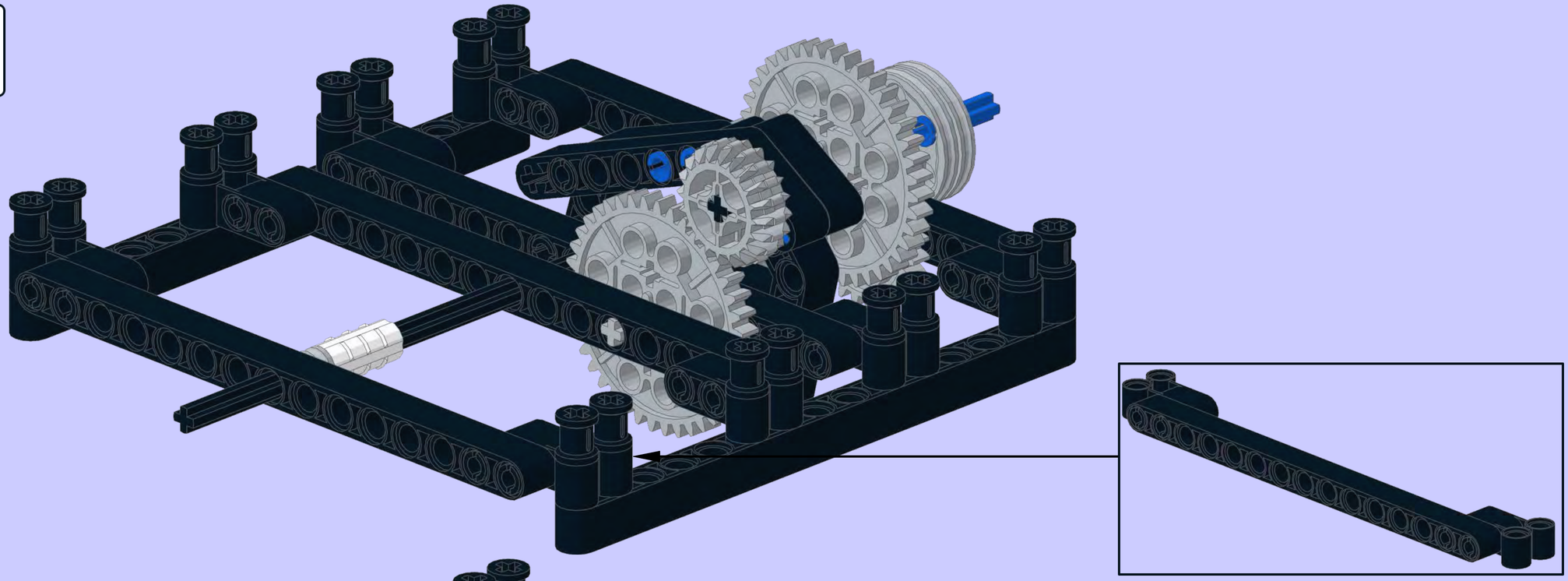

14

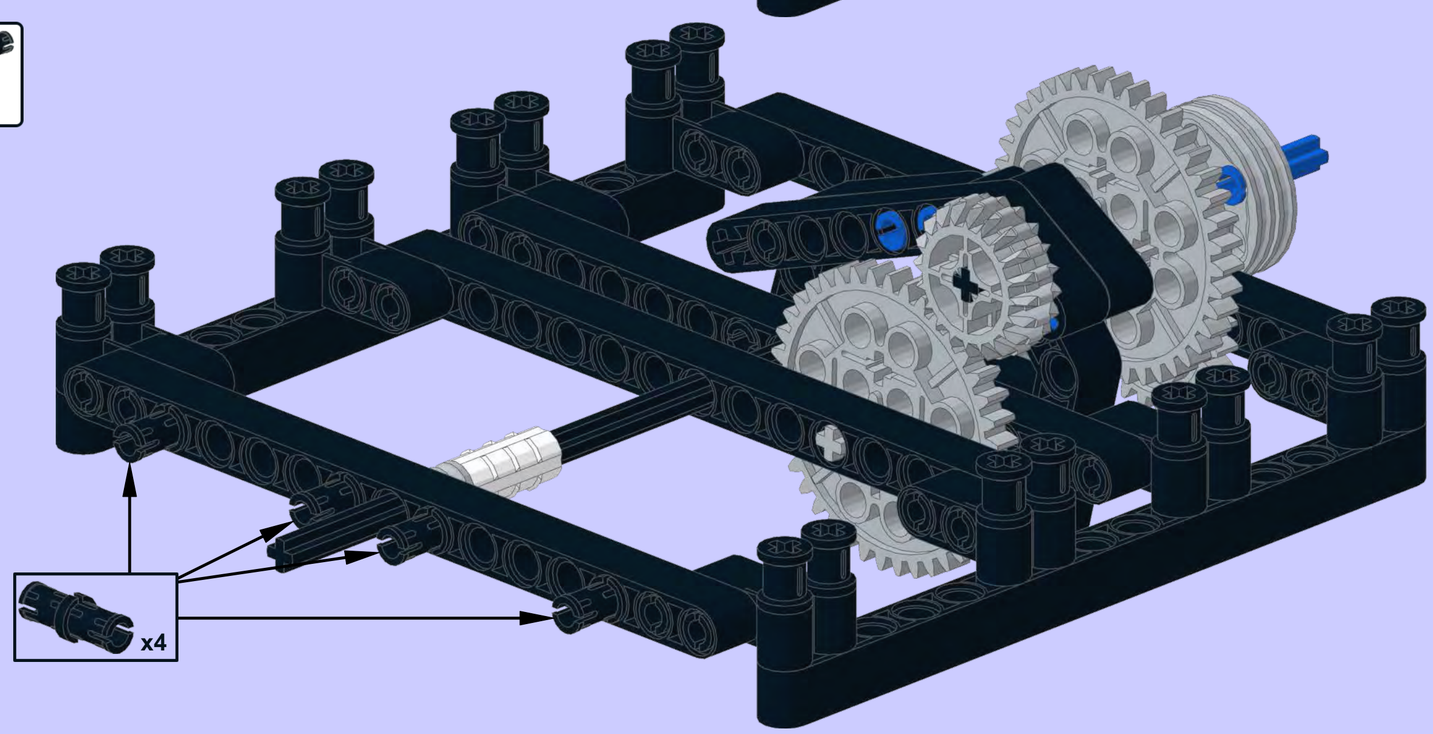

**15**

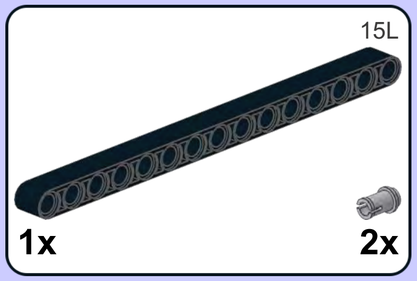


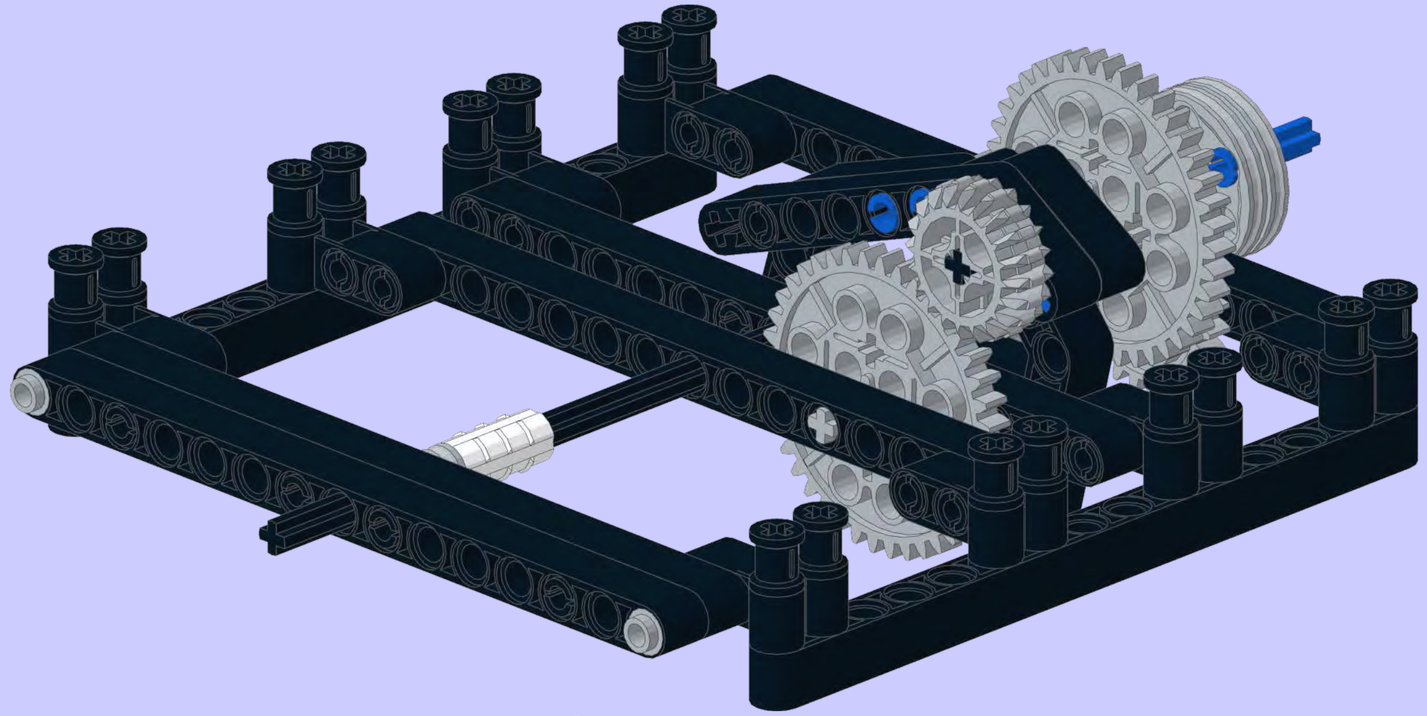

**16**

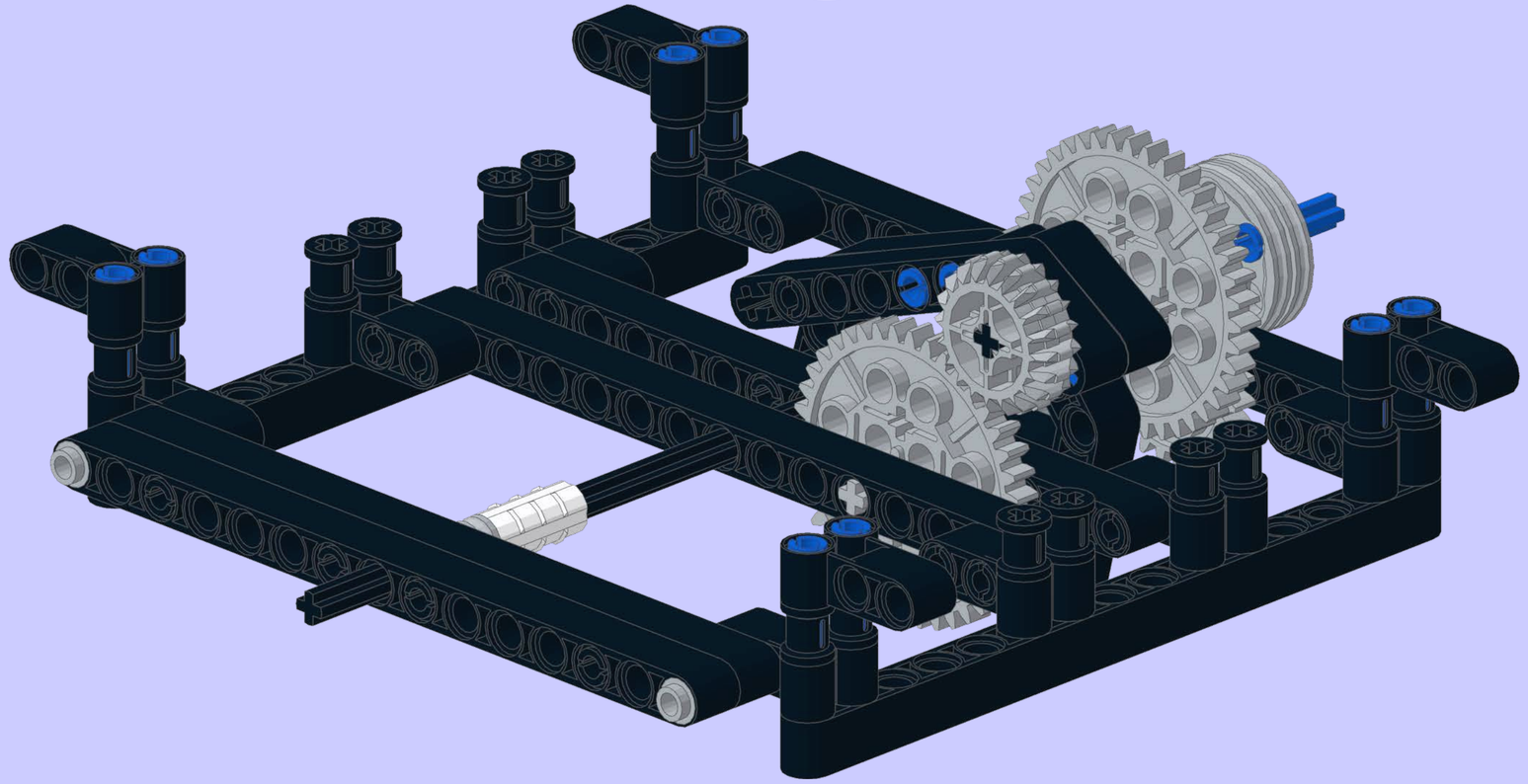

14

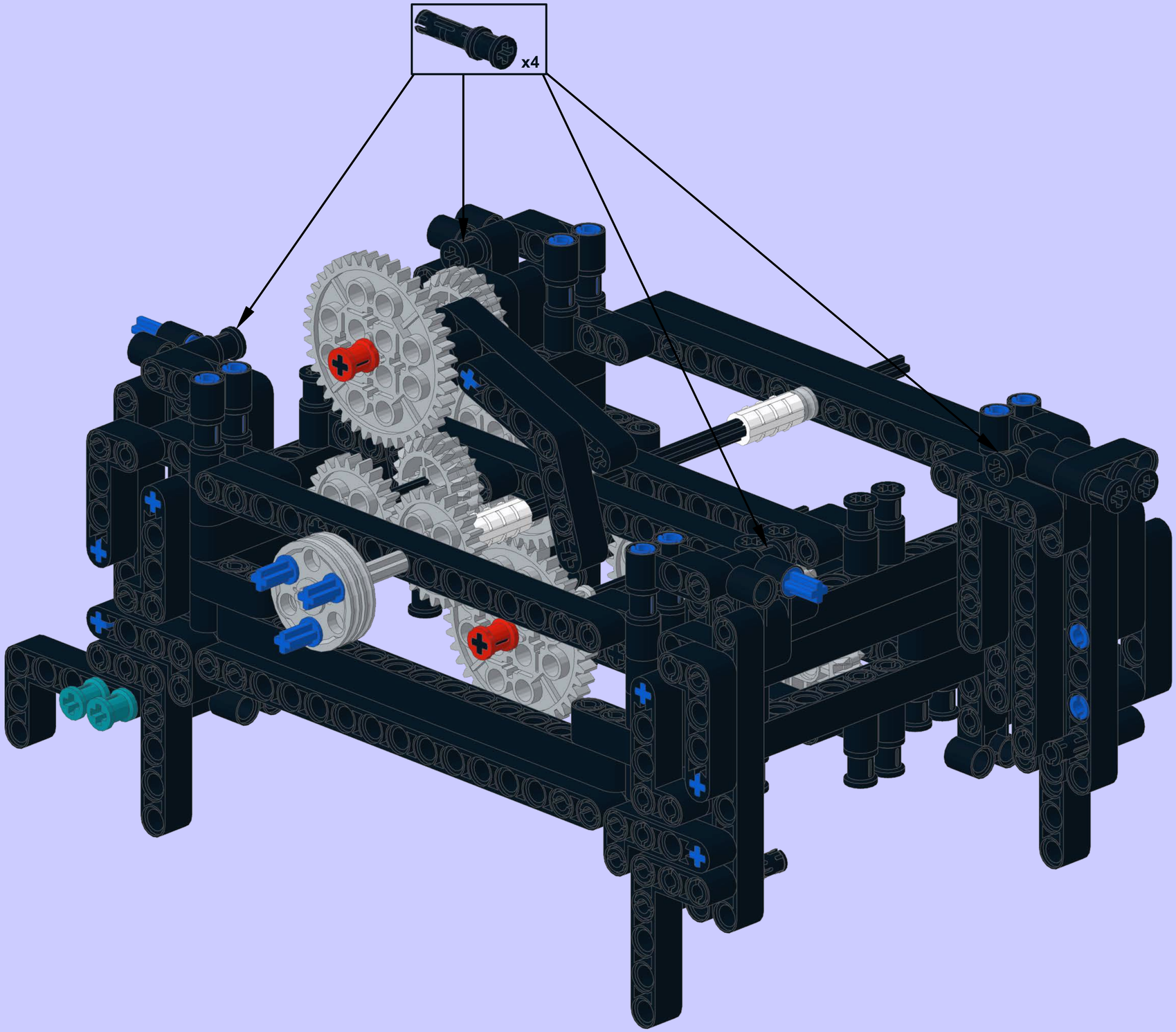

15

6x

x6

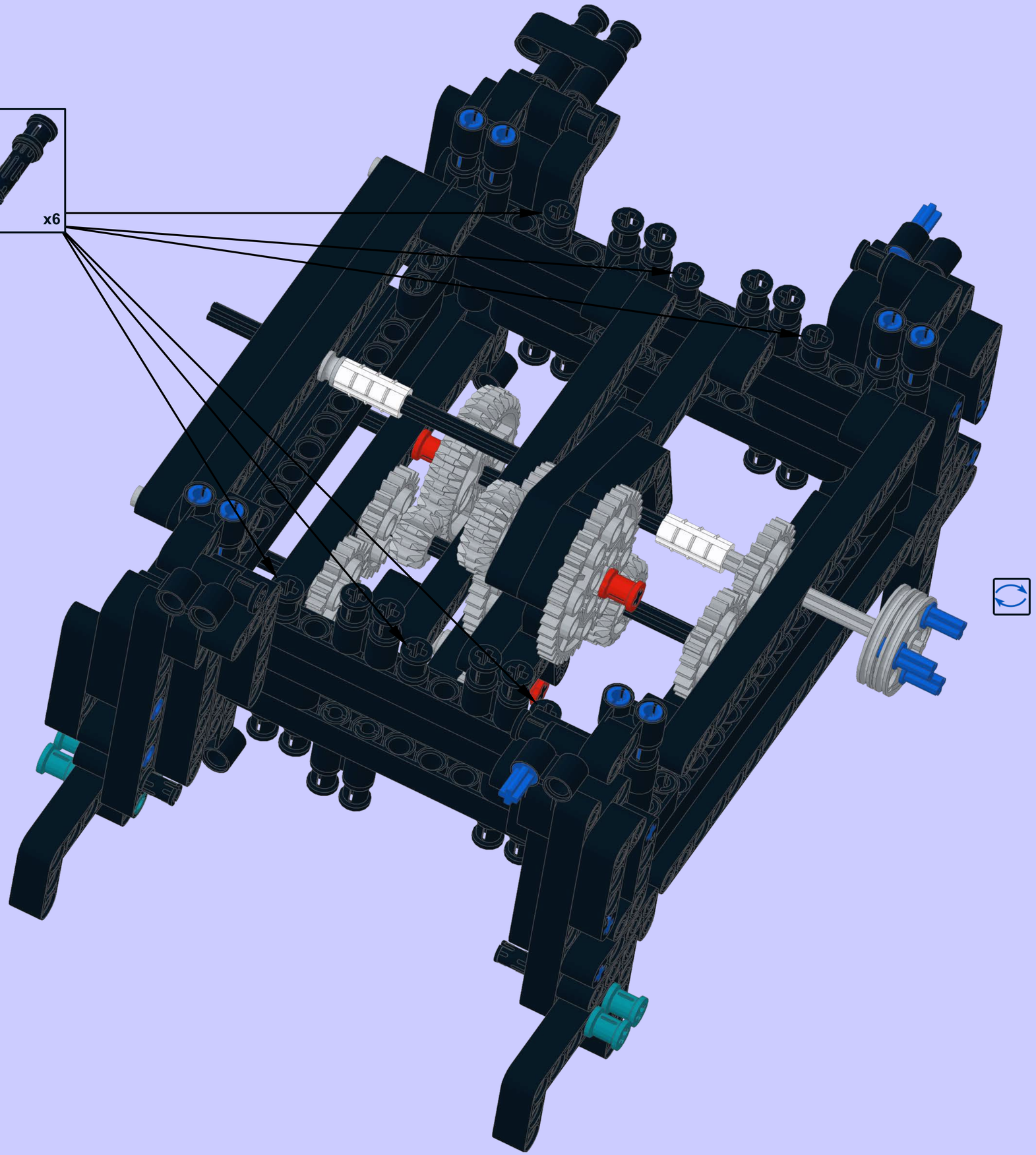

## Dial Frames - two required, one for the Saros spiral and one for the calendar

1

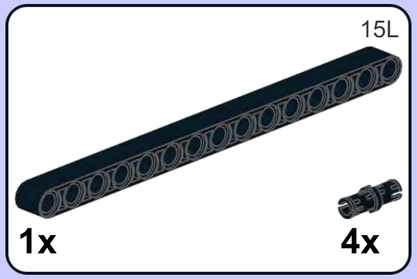


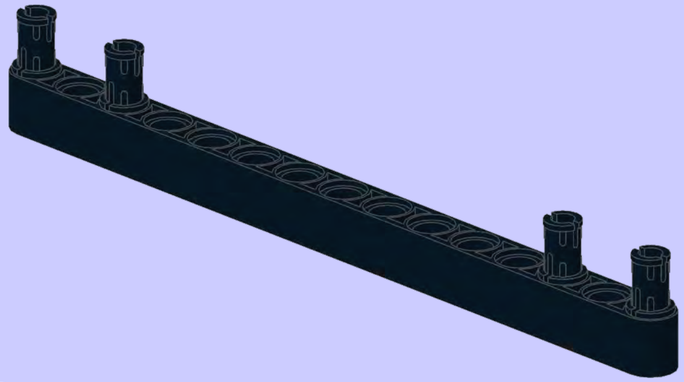

2

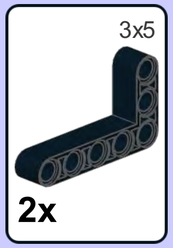


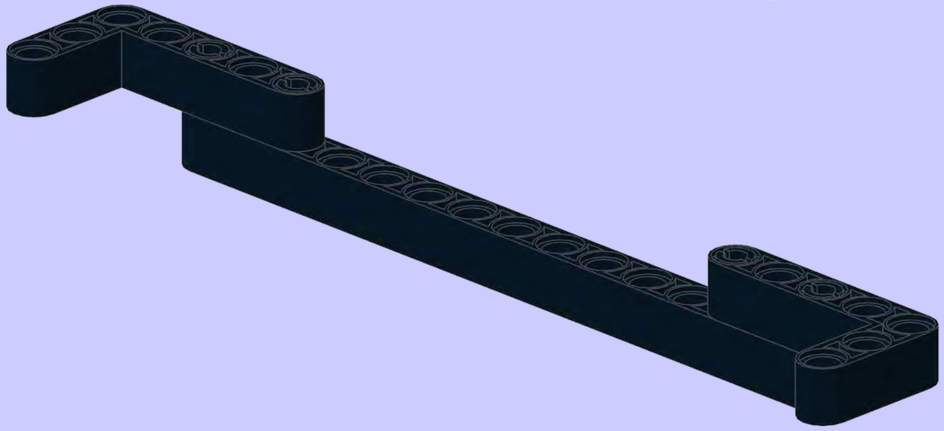

**3**

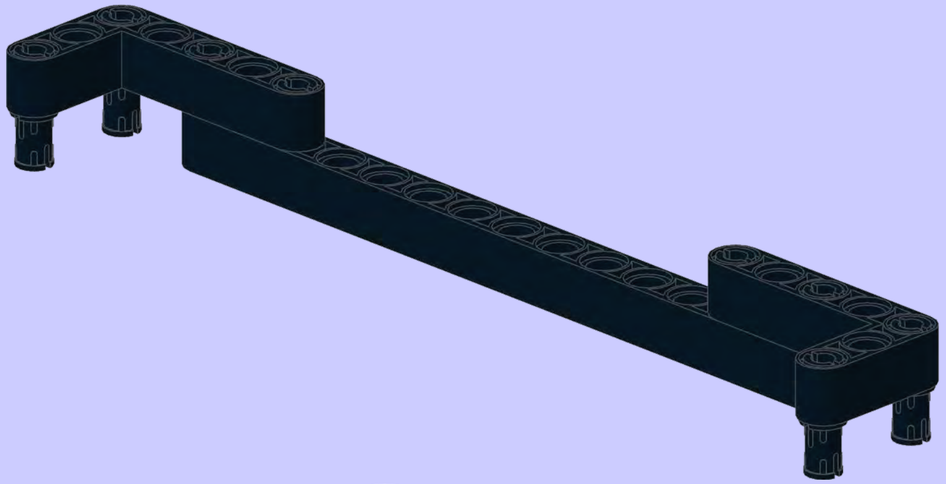

**4**

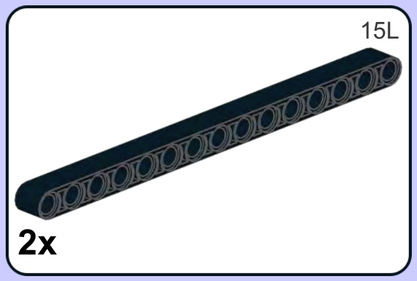


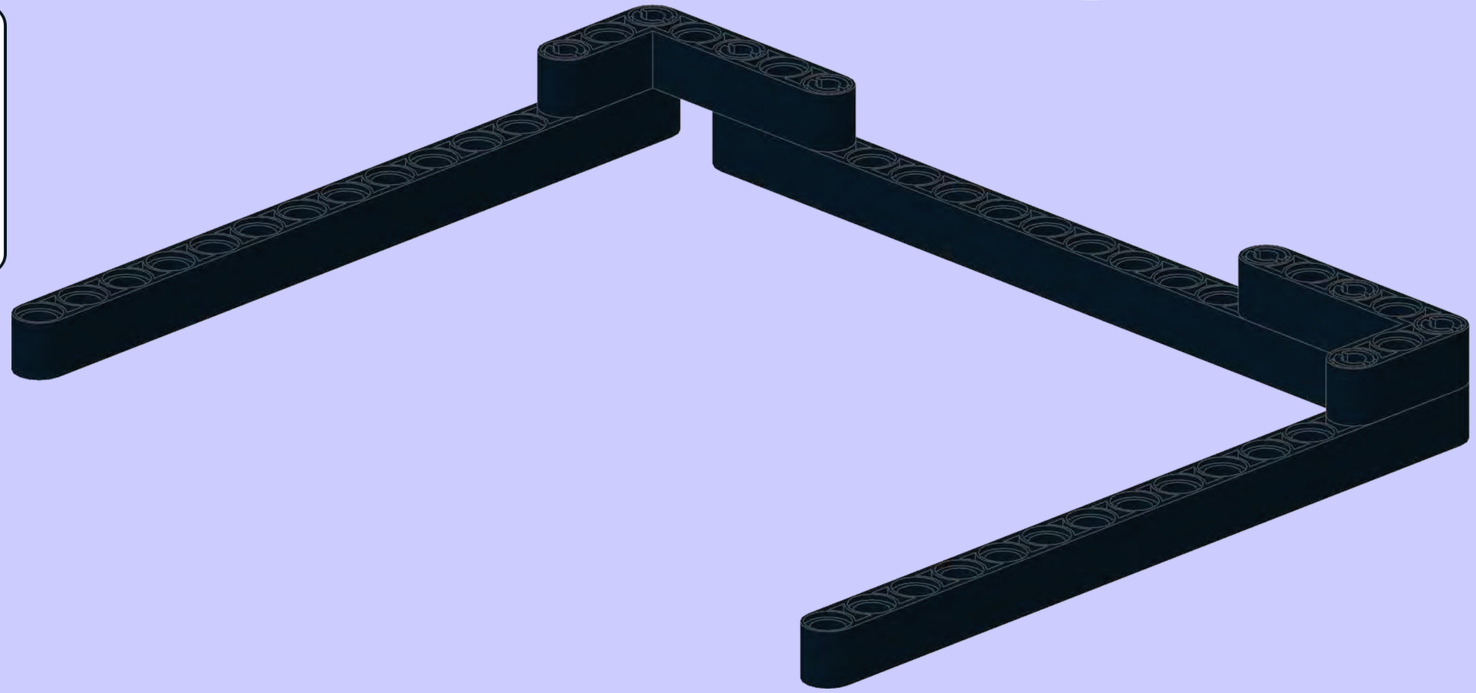

5

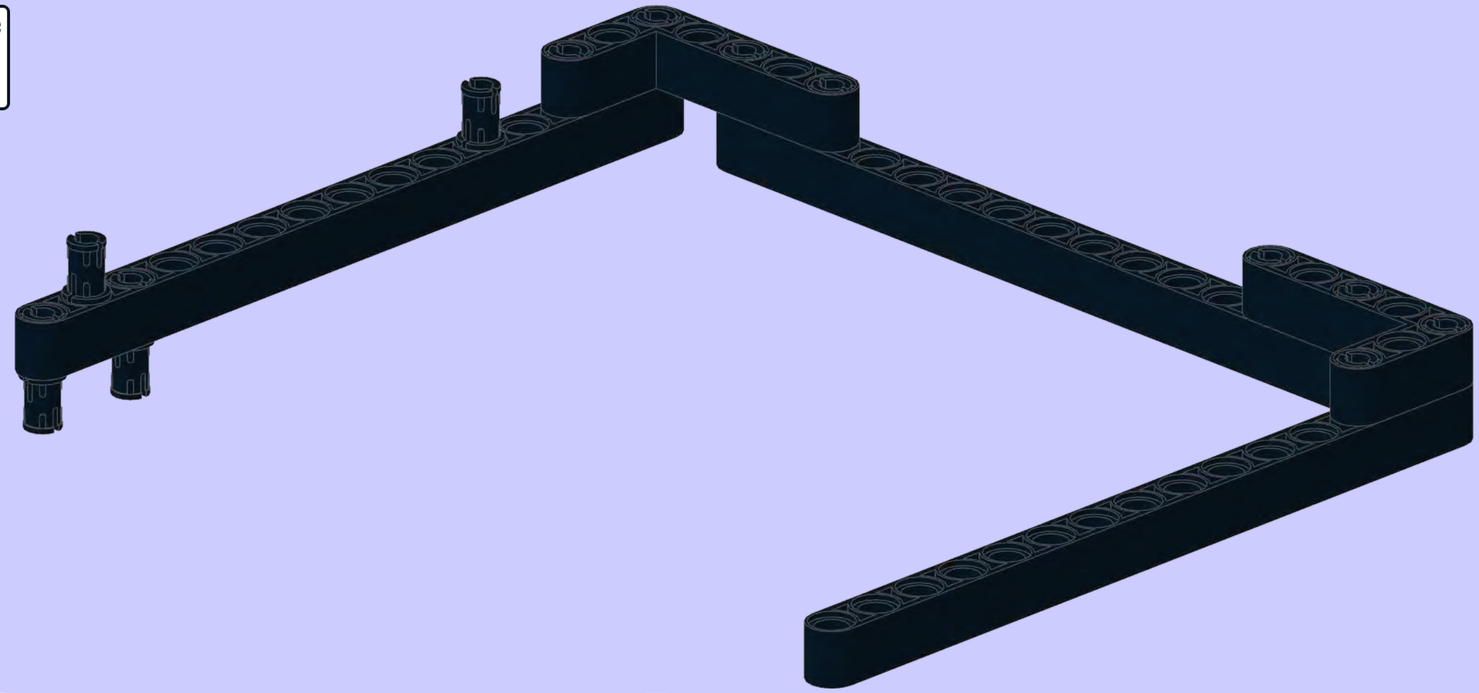

6

**7**

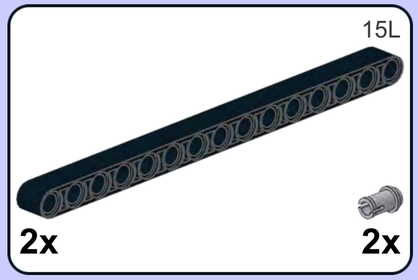


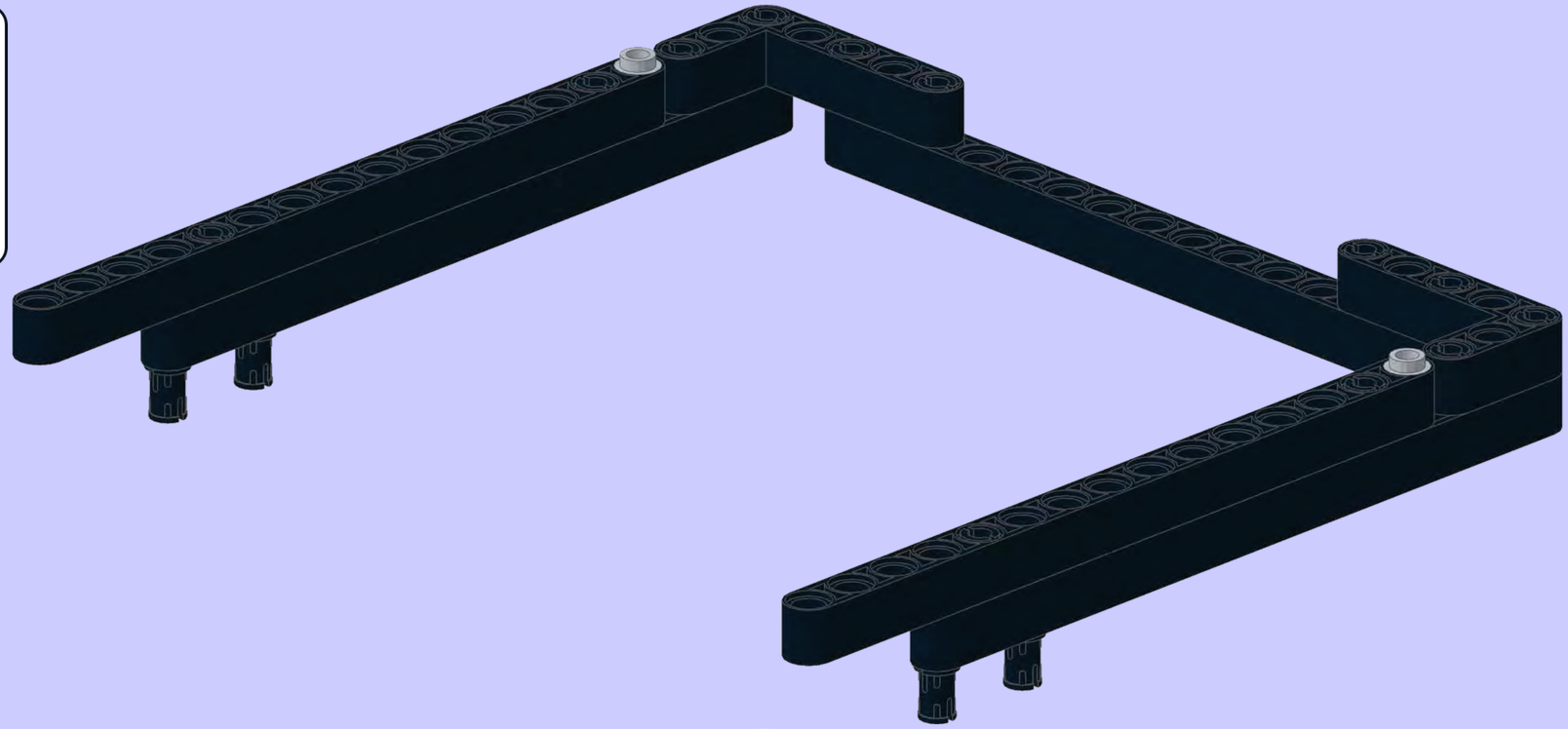

**8**

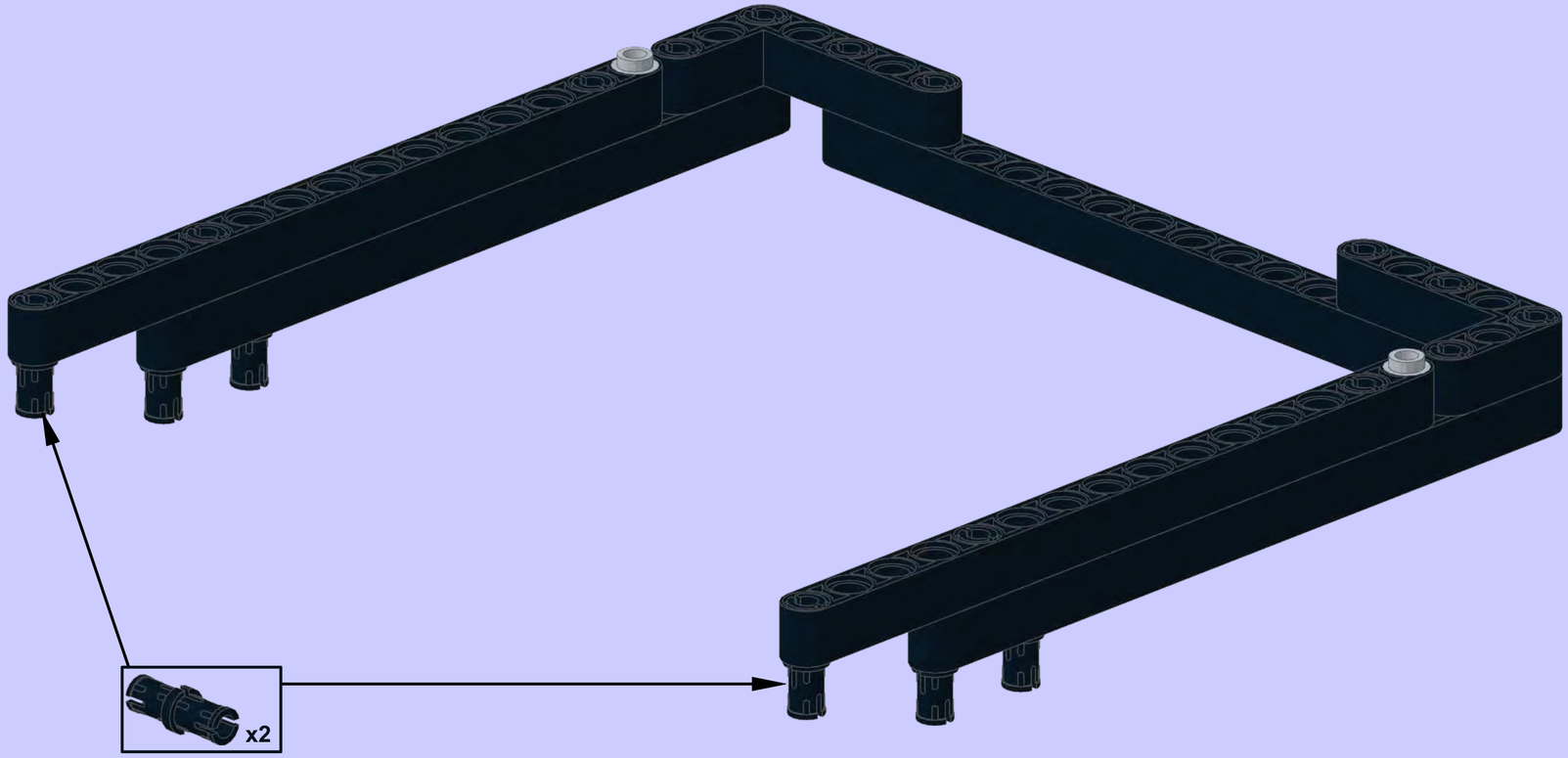


**x2**

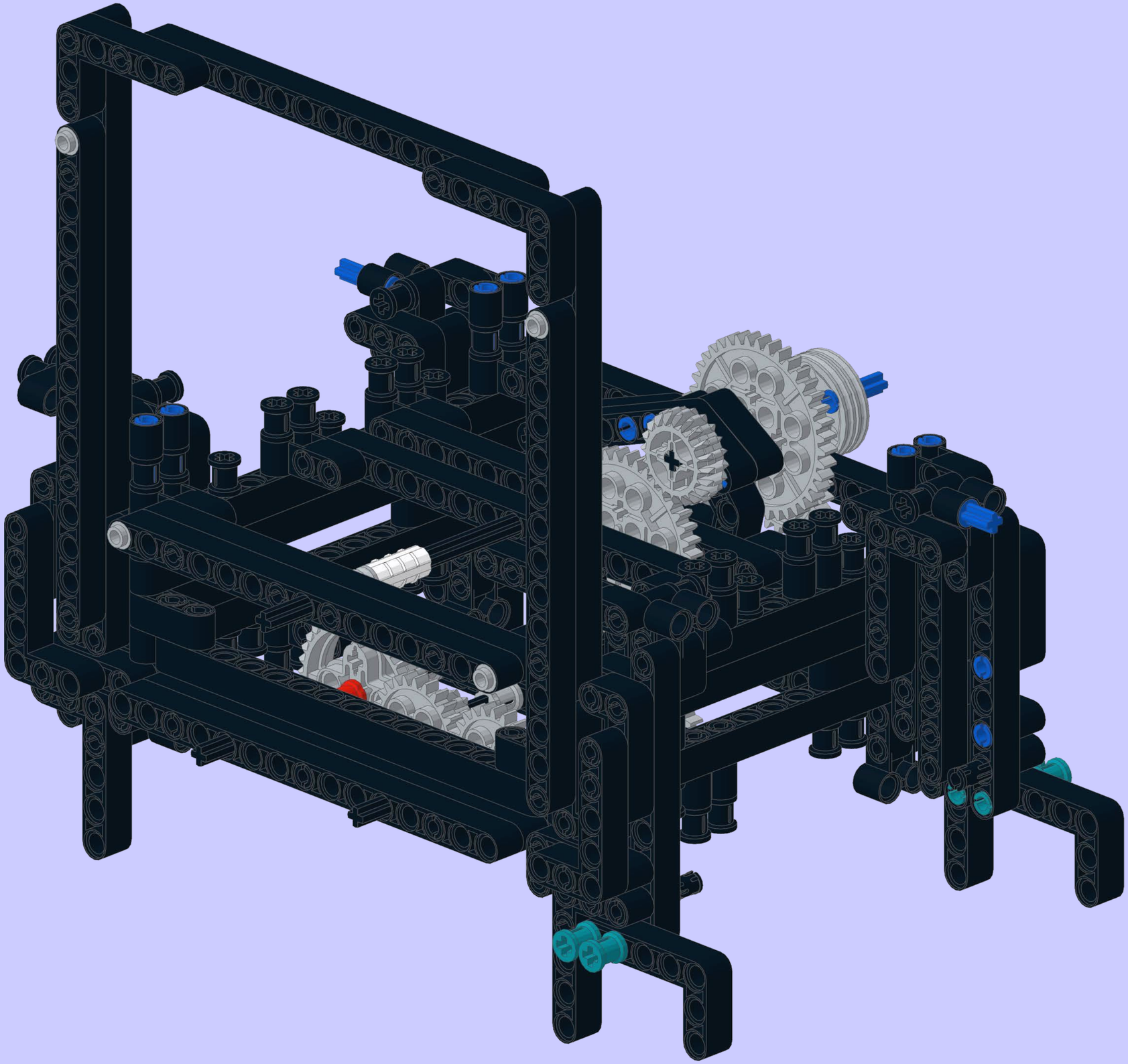

1

## "Stack" - Left Front

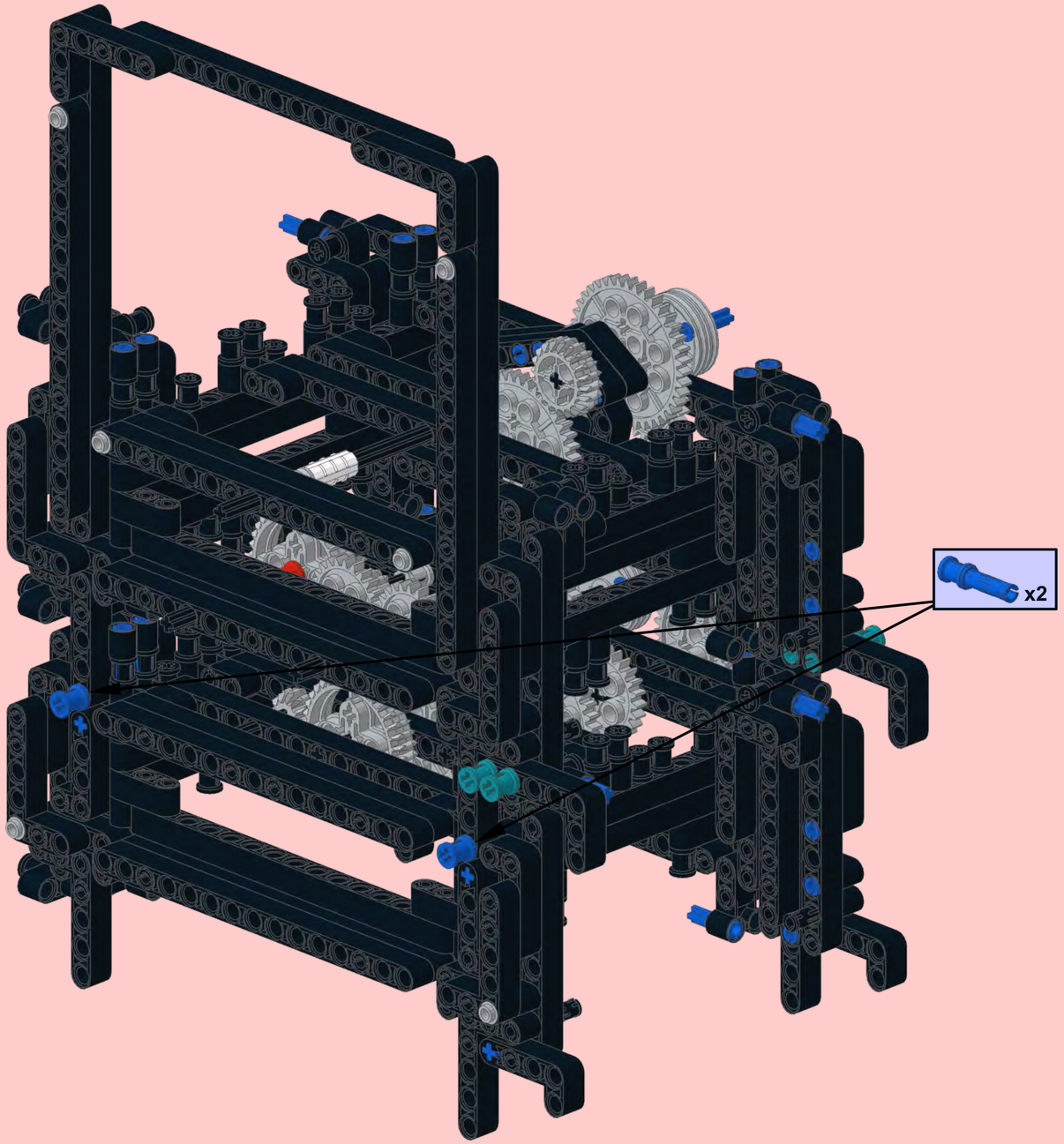

2

2x

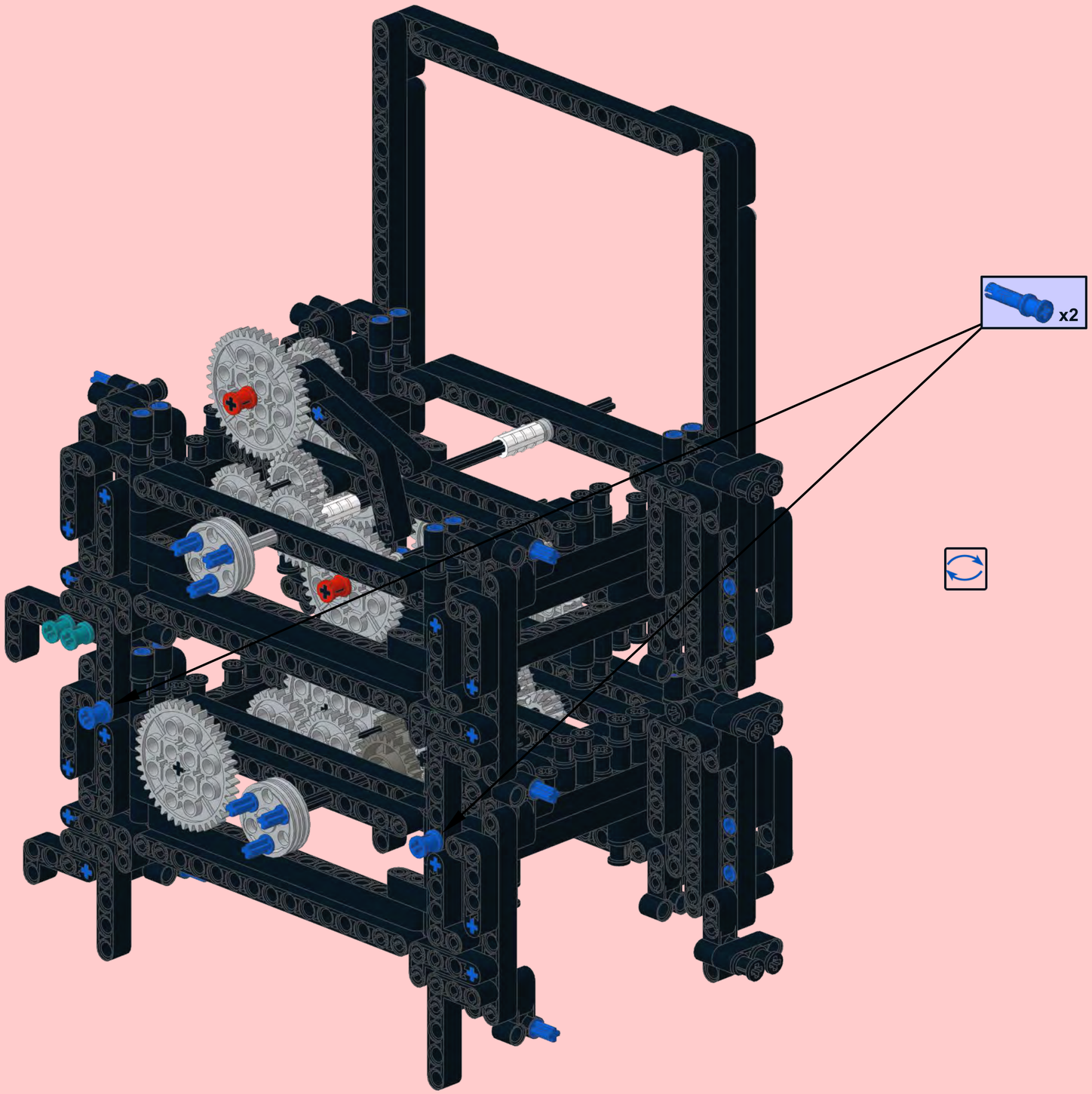

# Power train - left wheel multiplies by 5, right wheel divides by 5

**1**

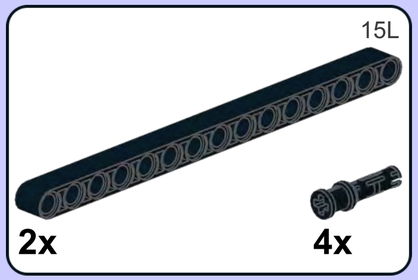


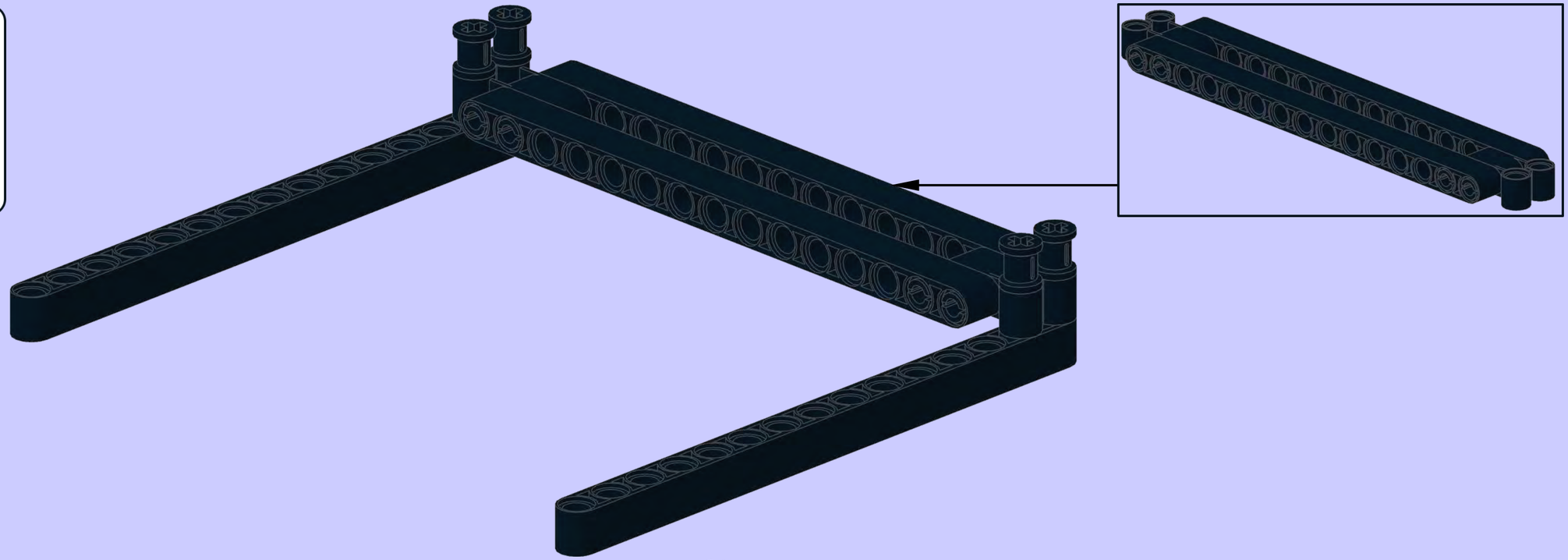

**2**

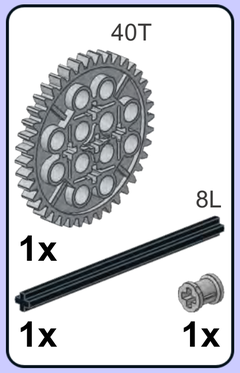


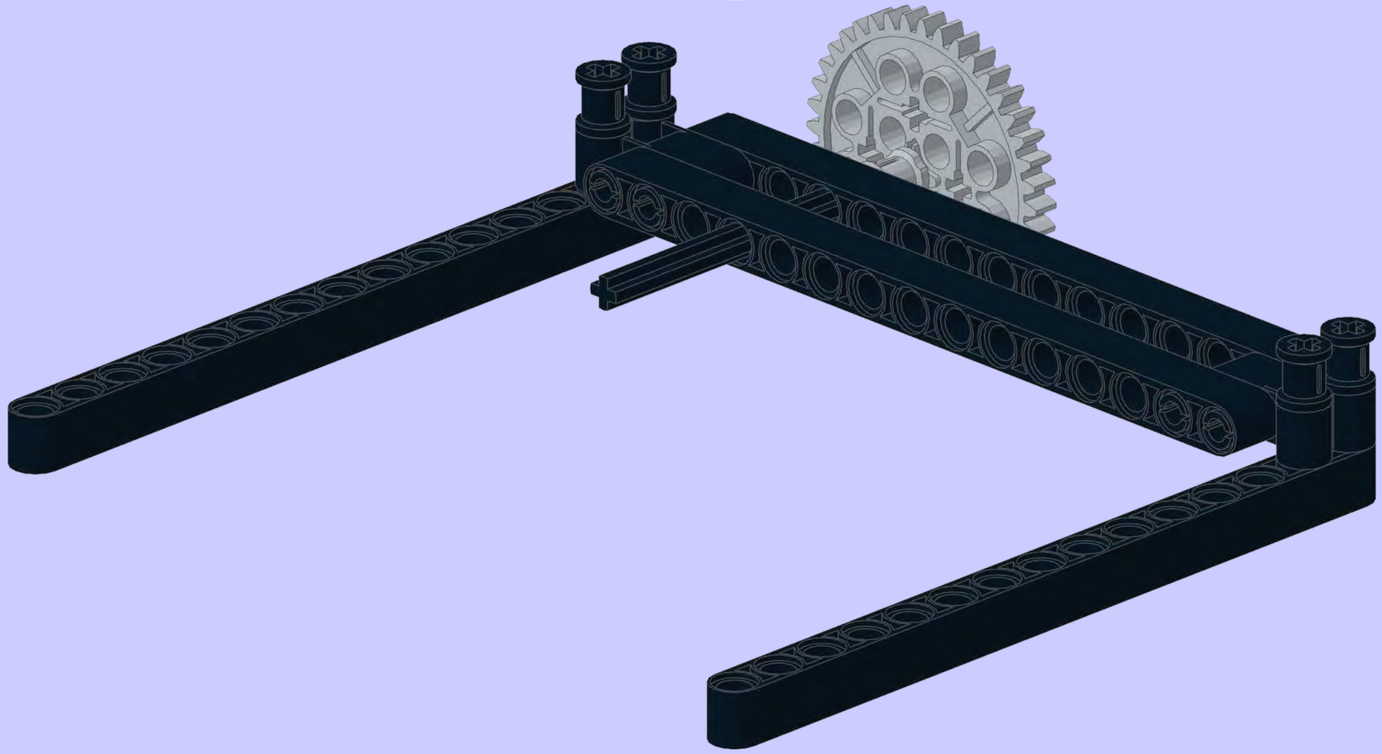

**3**

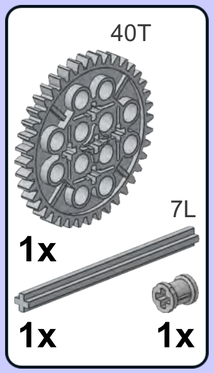


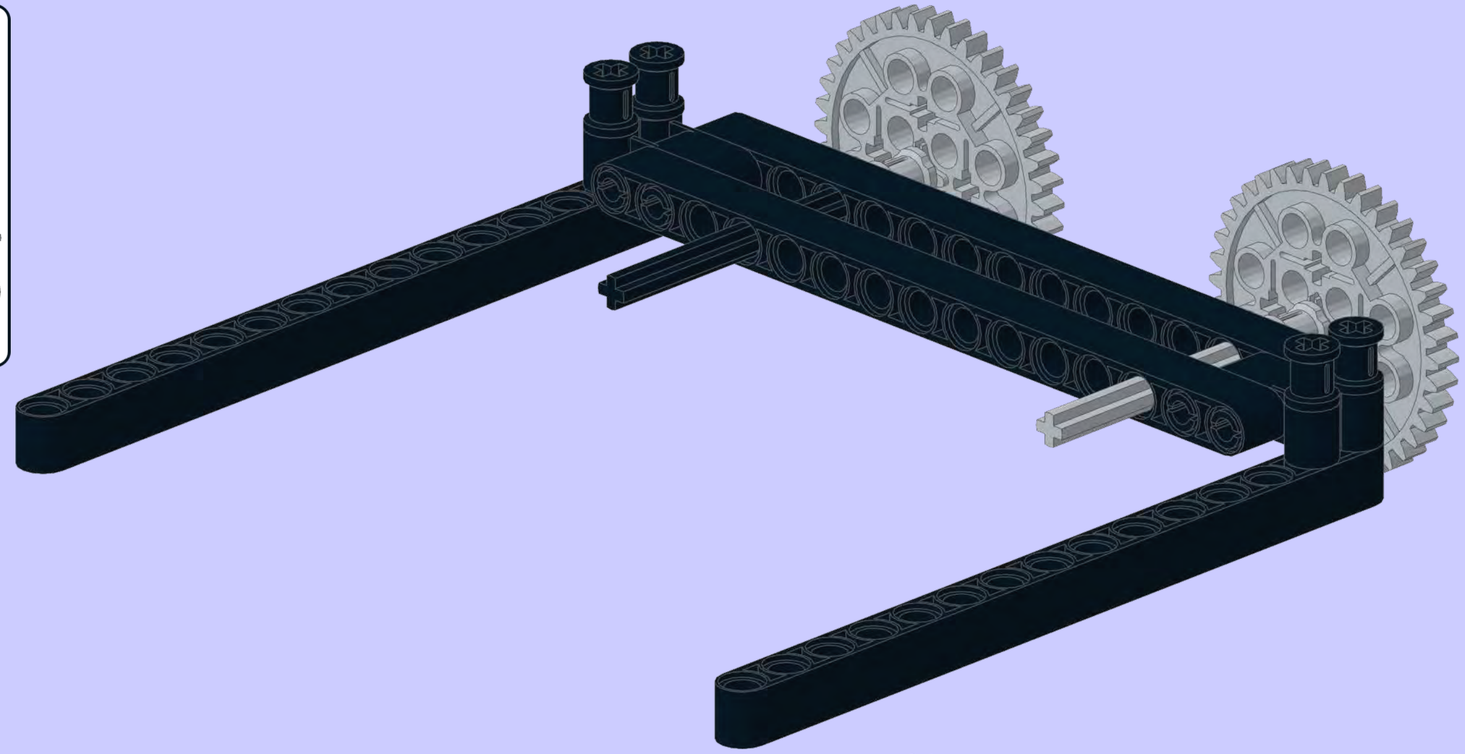

**4**

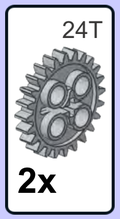


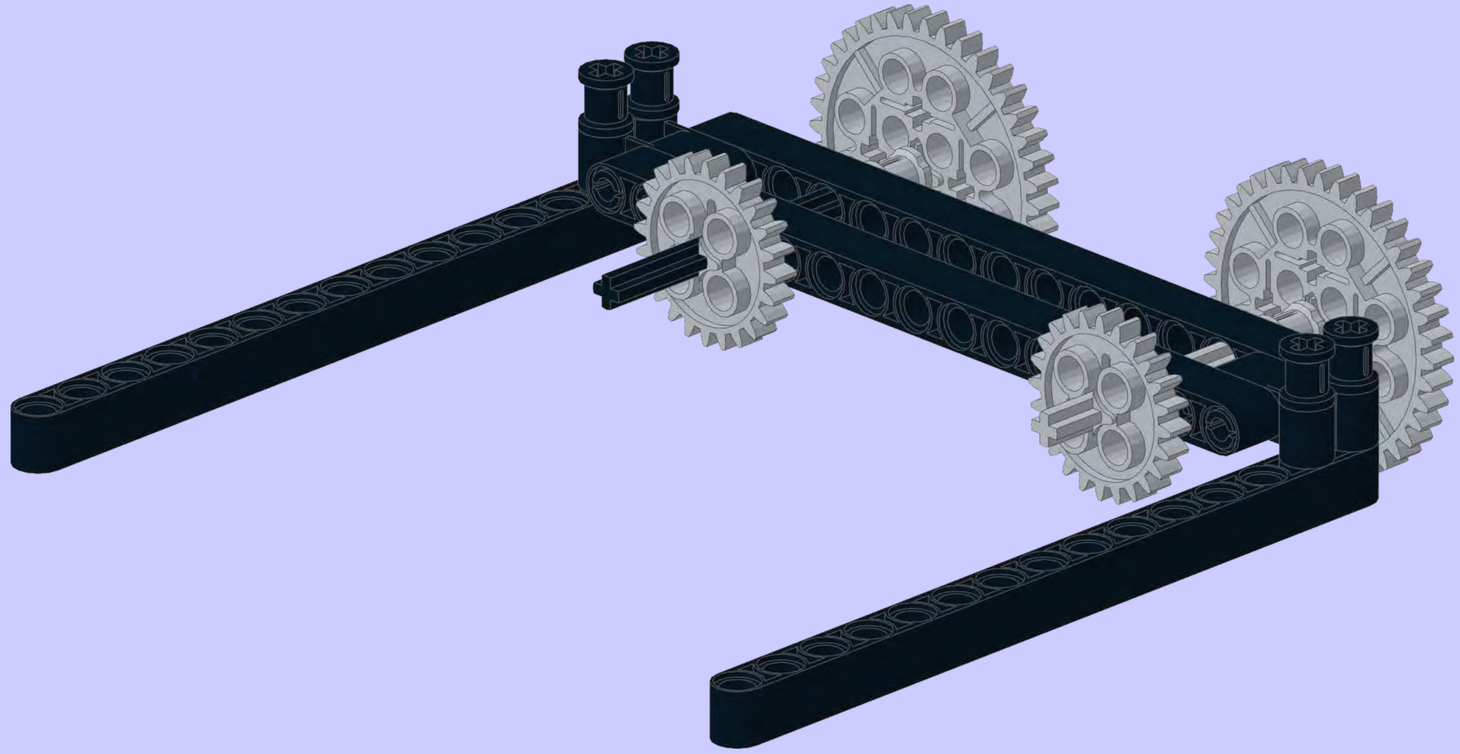

**5**

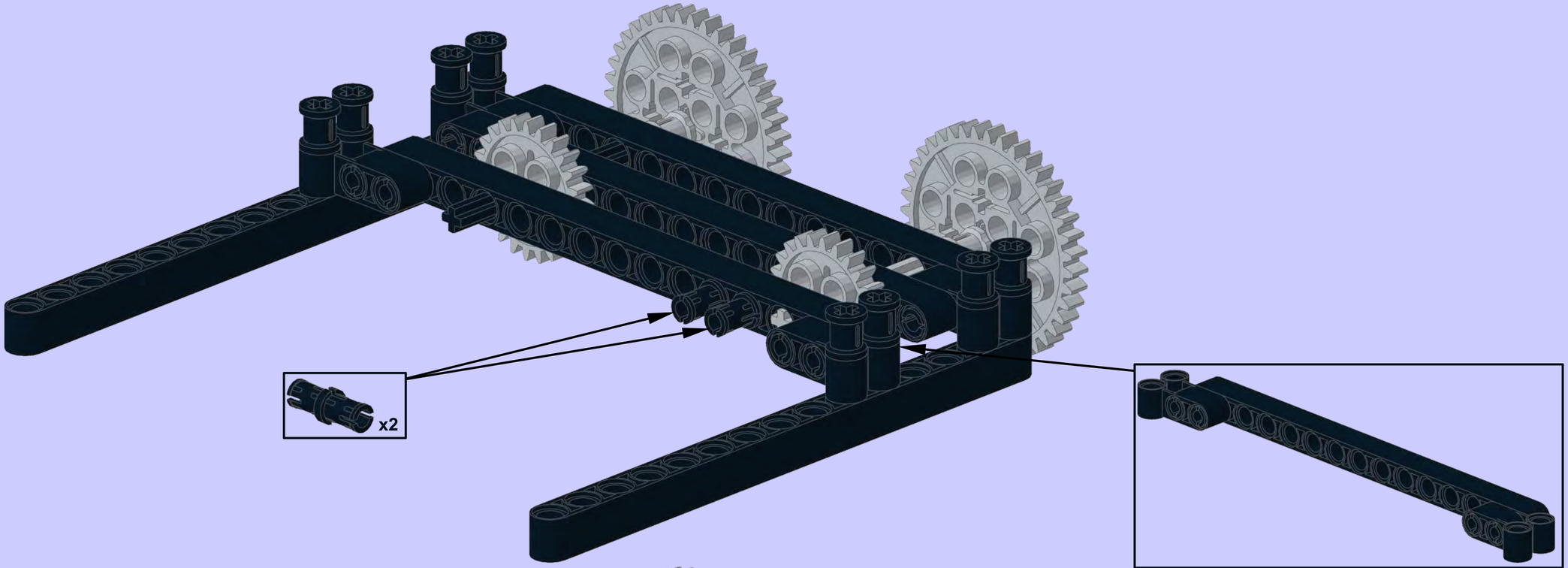


**6**

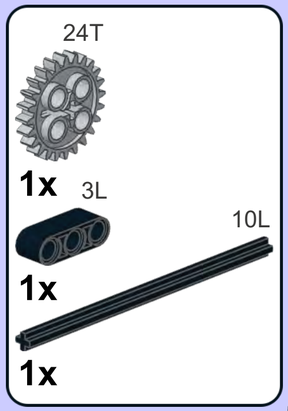


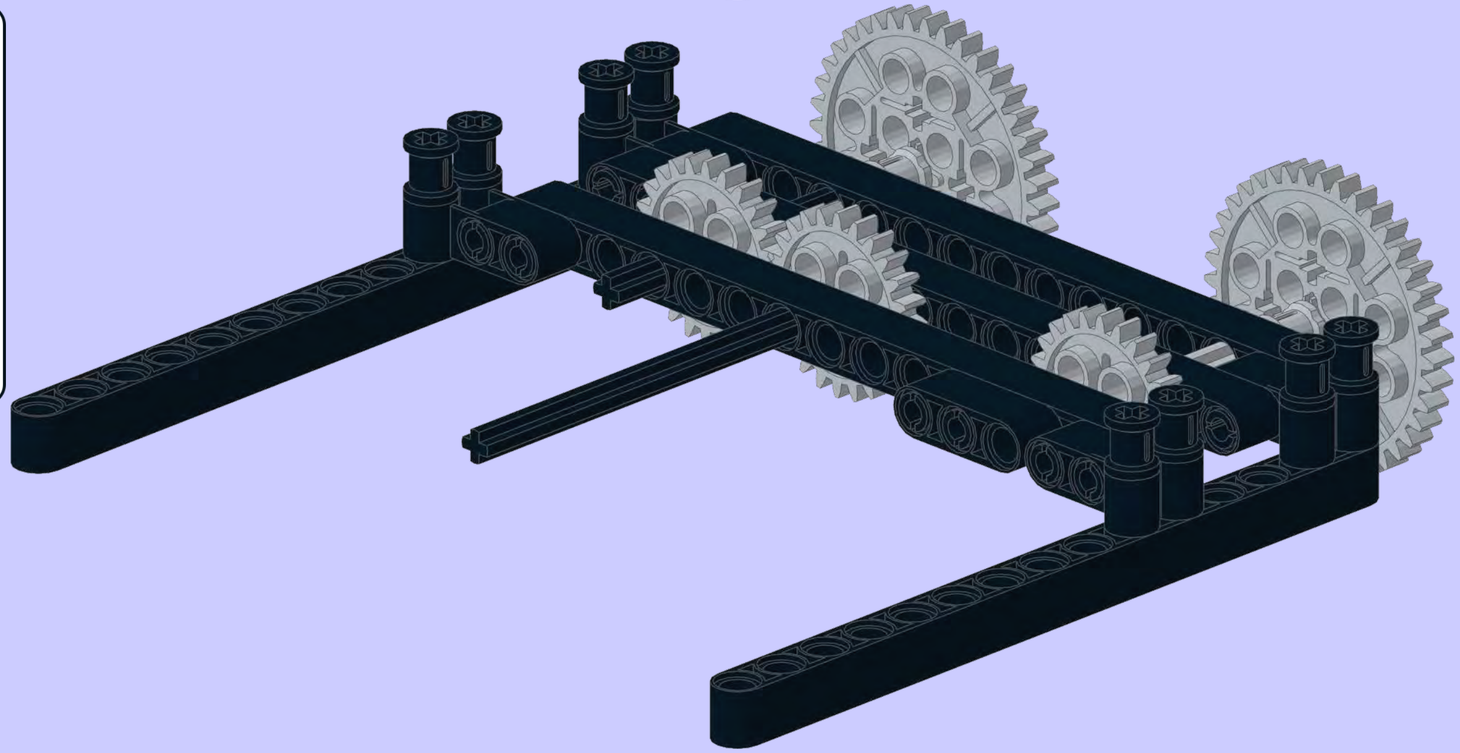

7

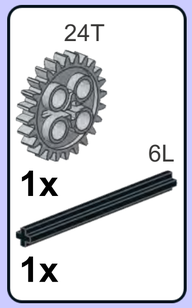


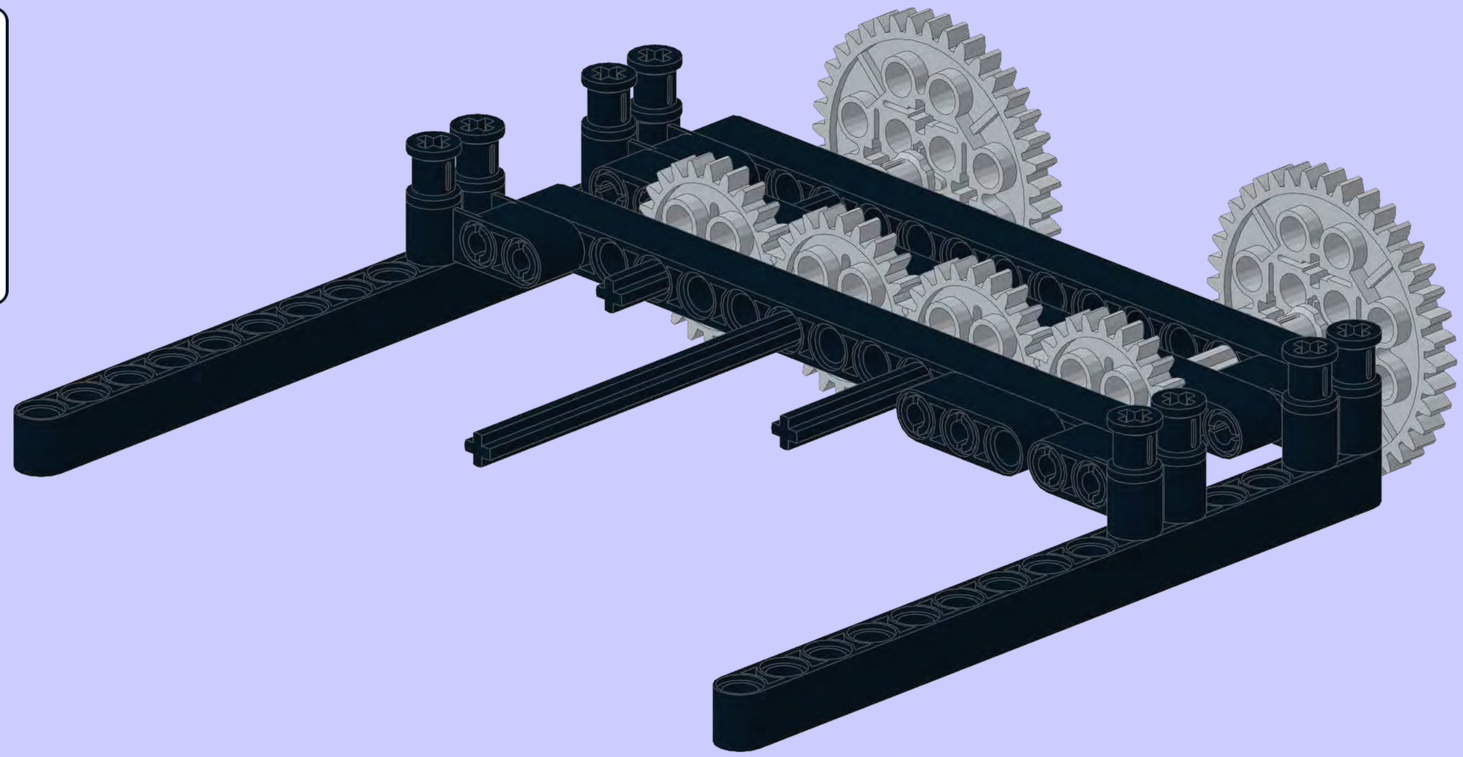

8

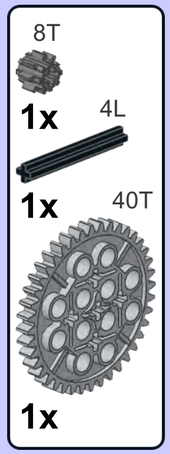


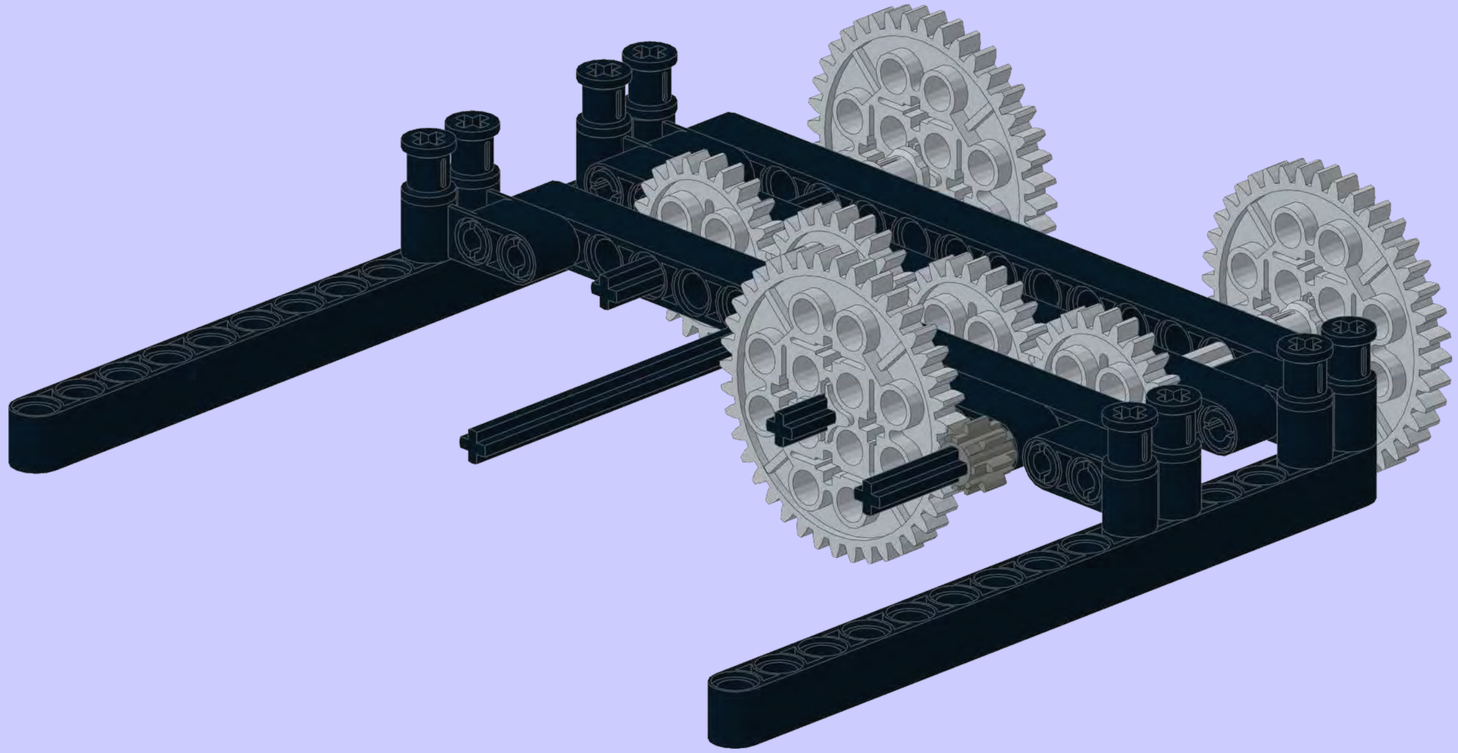

## 9

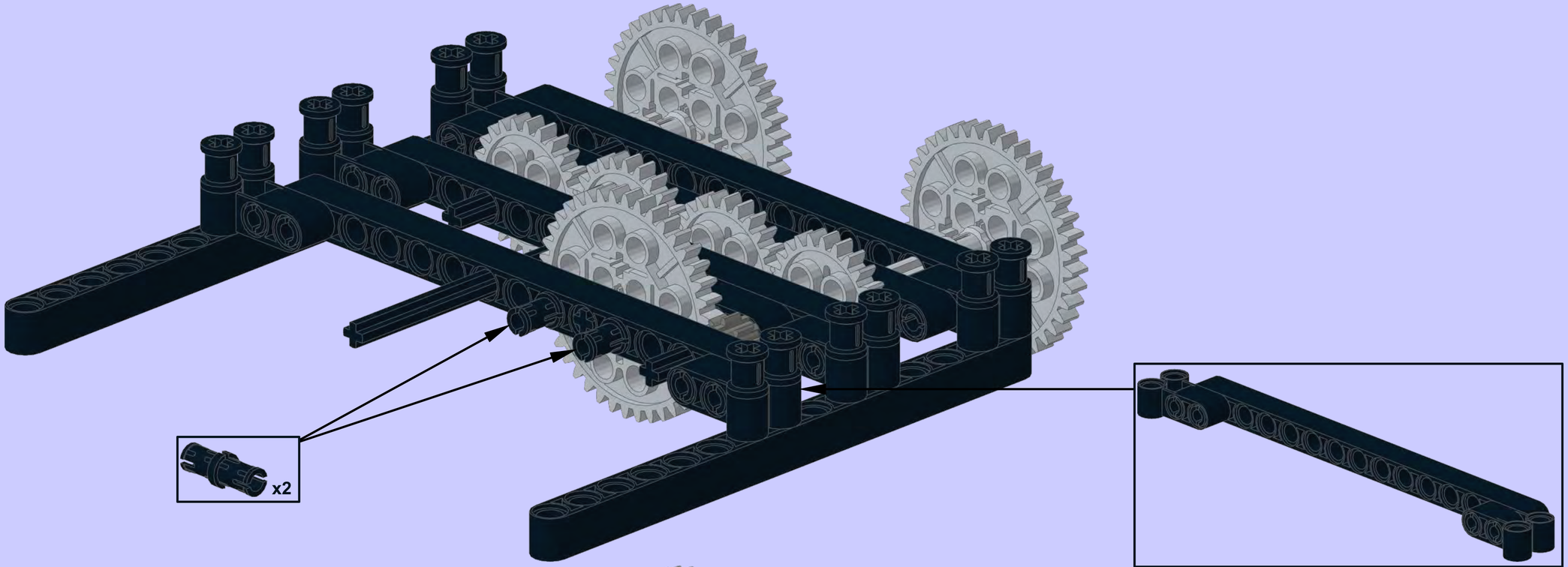


## 10

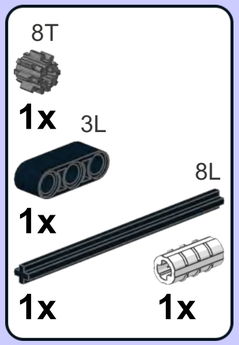


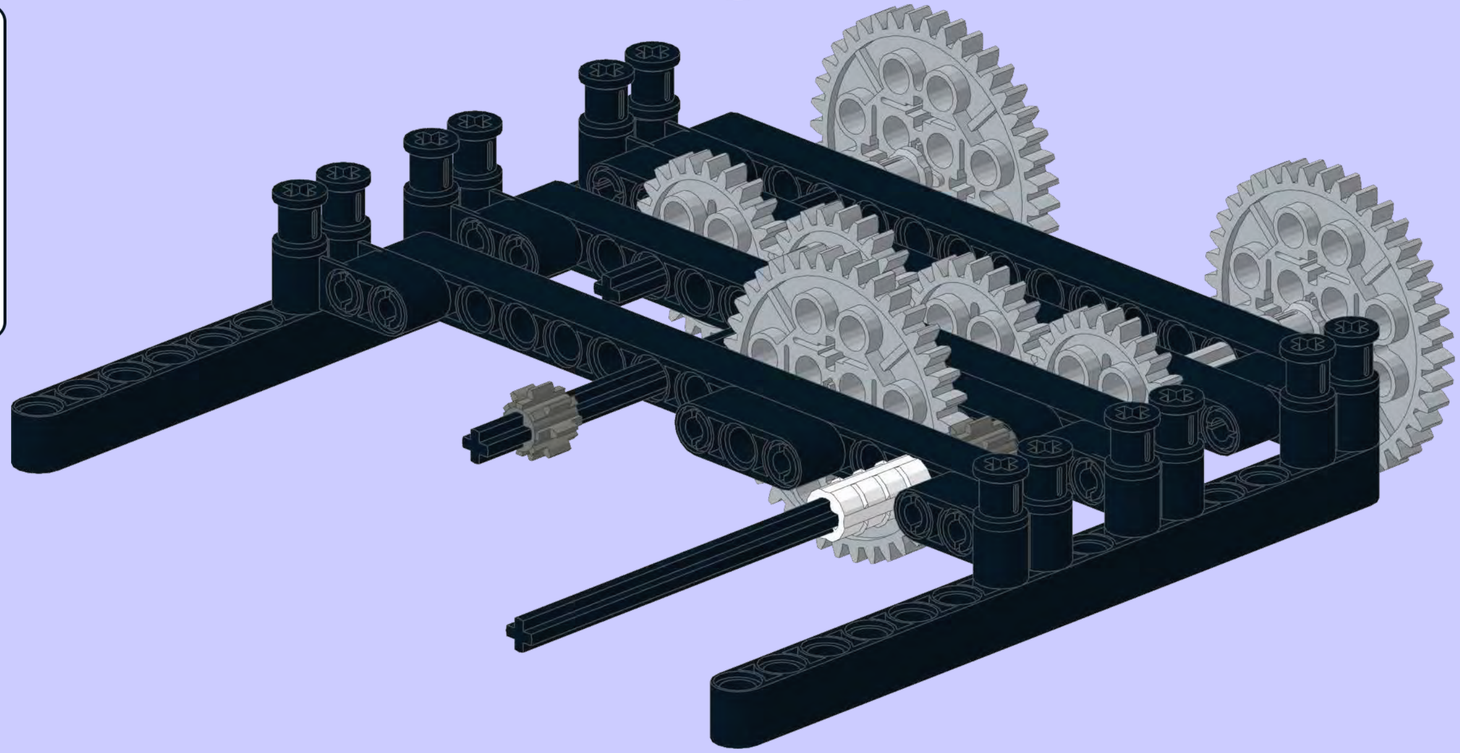

**11**

4x

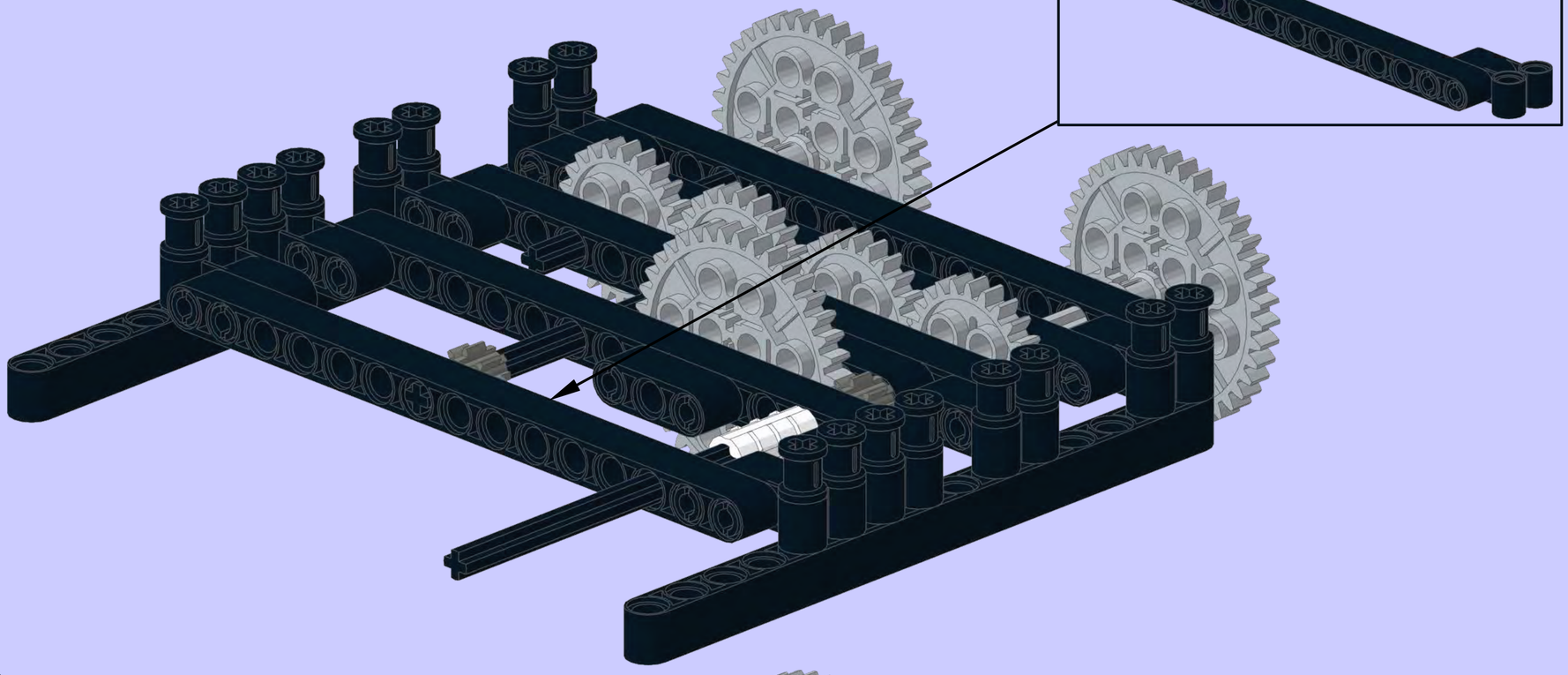

**12**

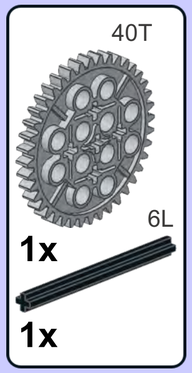


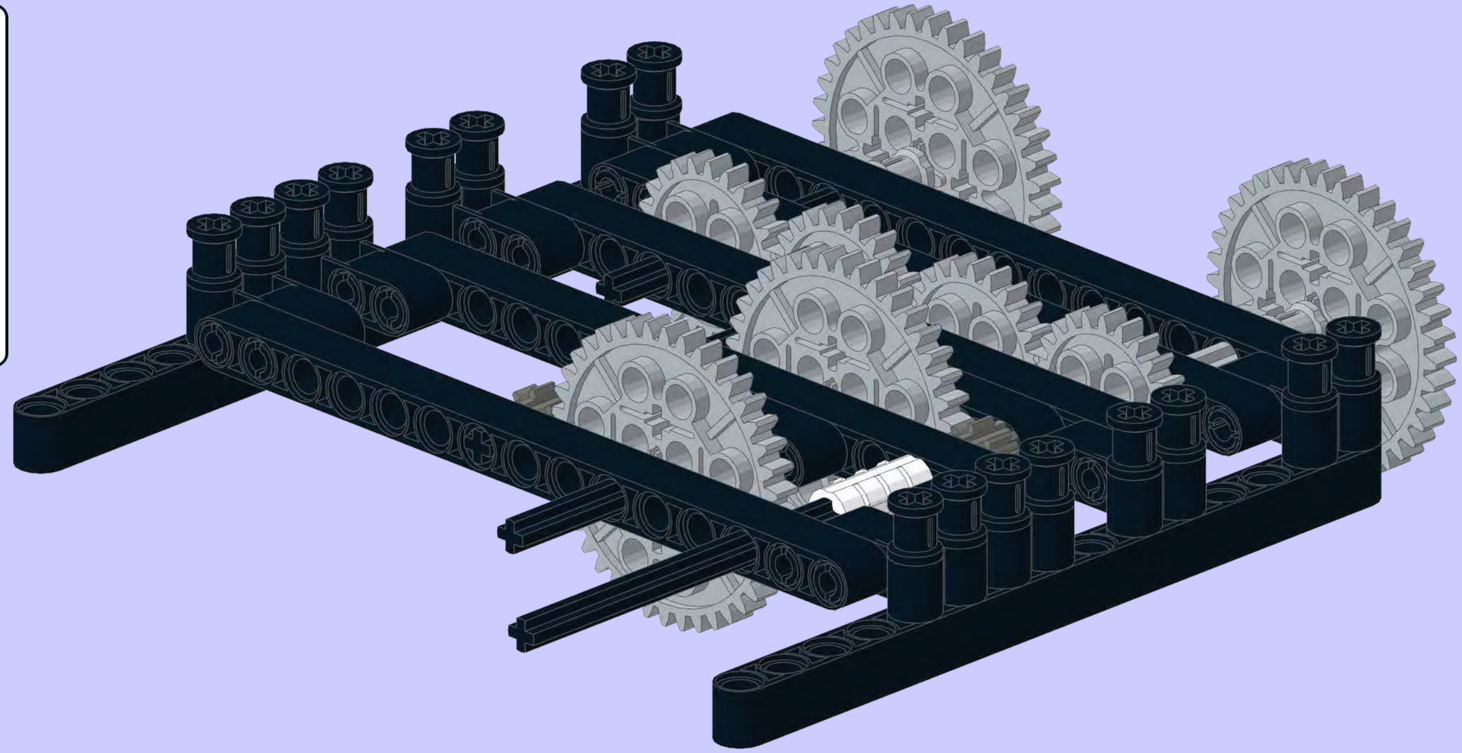

13

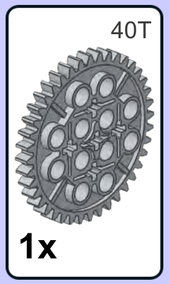


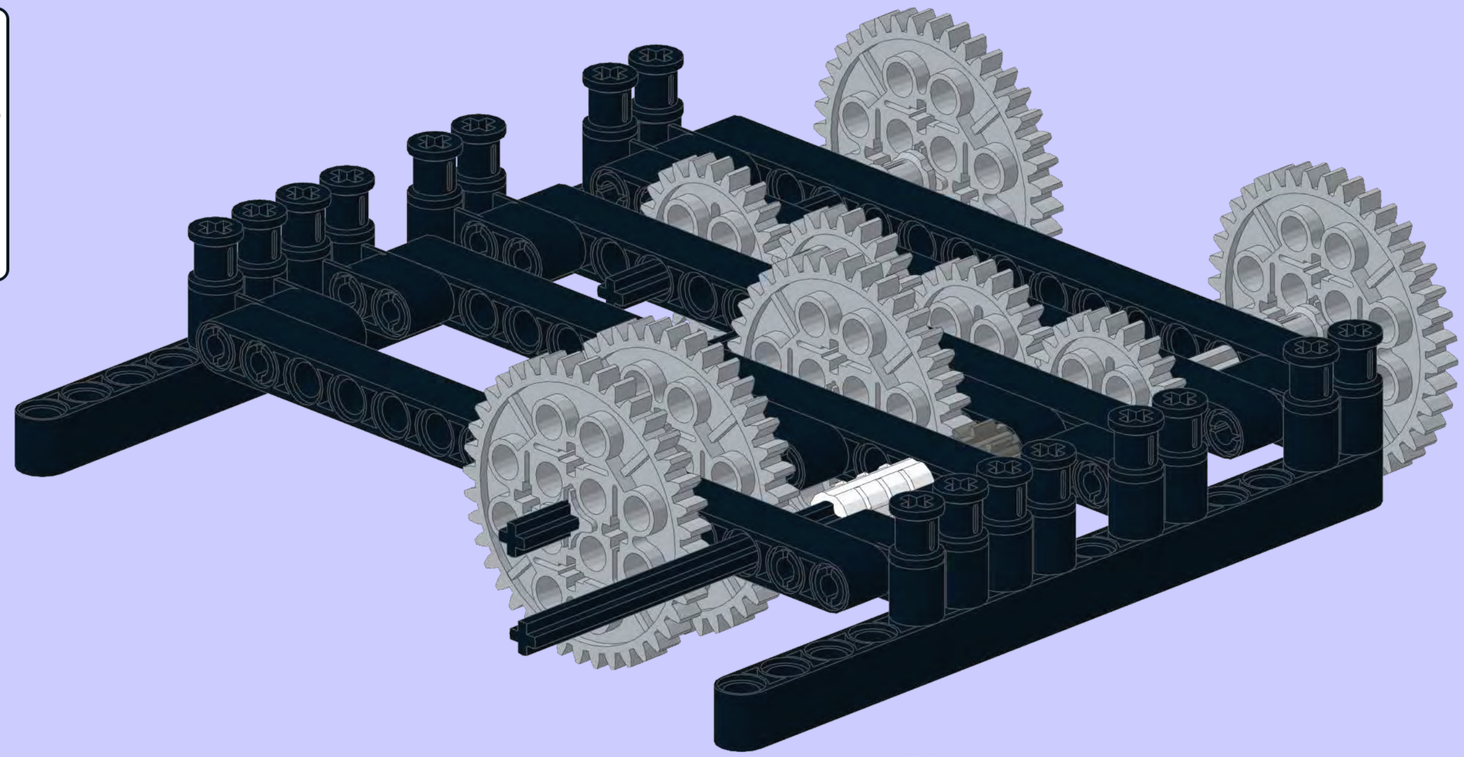

14

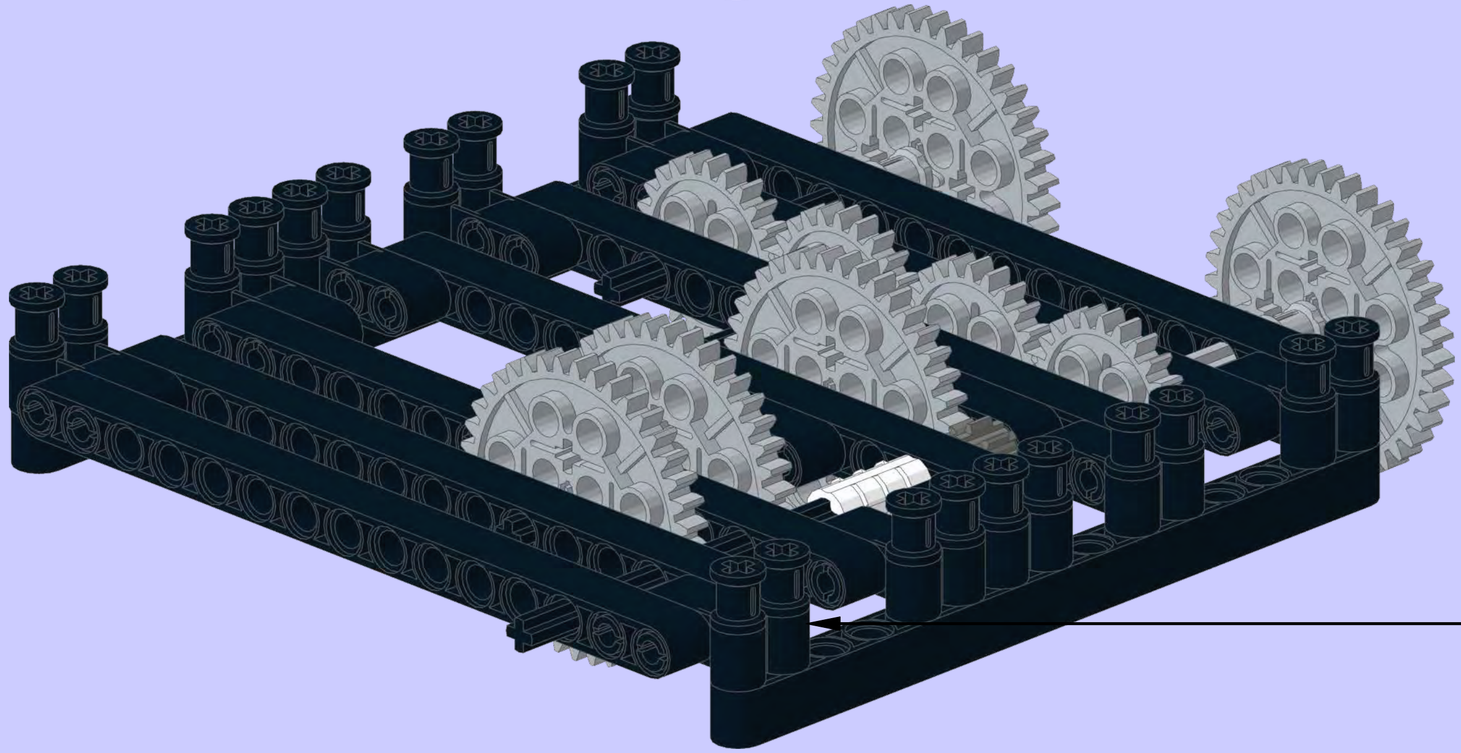

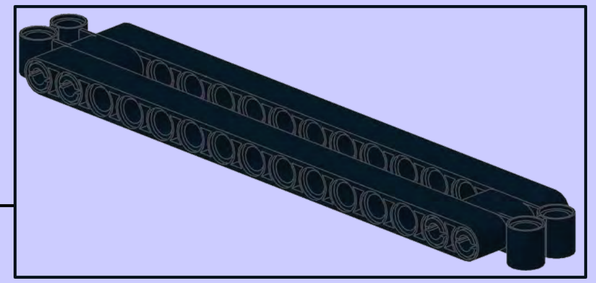

**15**

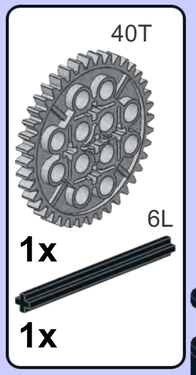


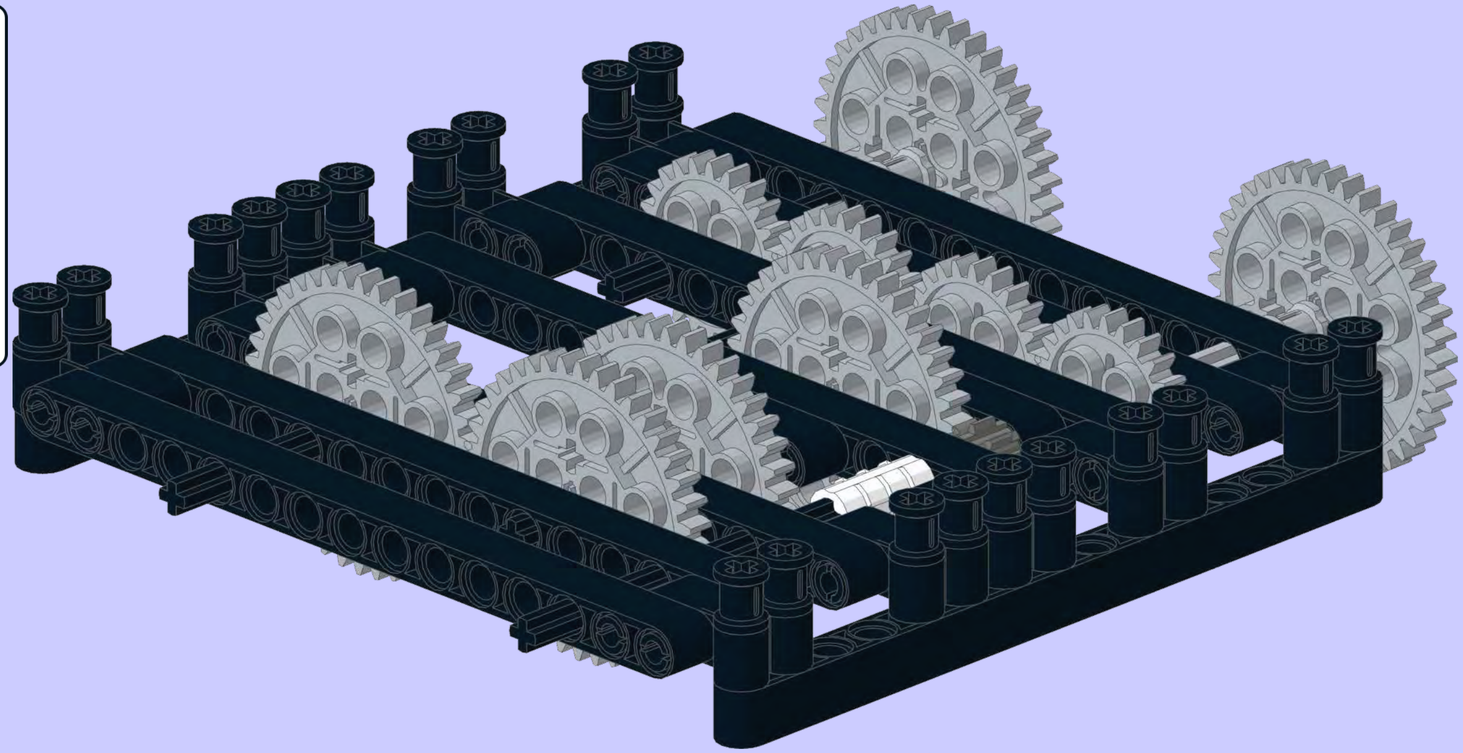

**16**

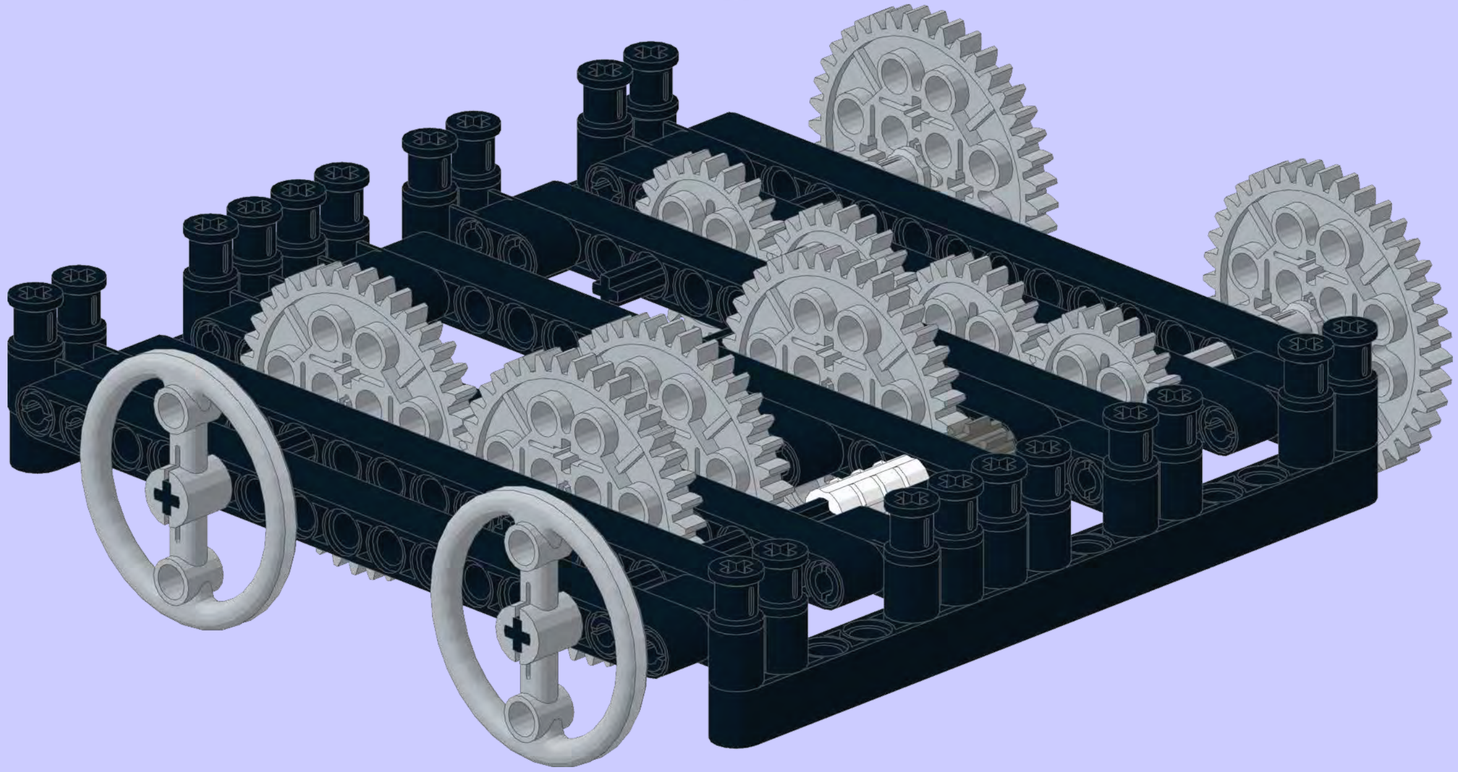

17

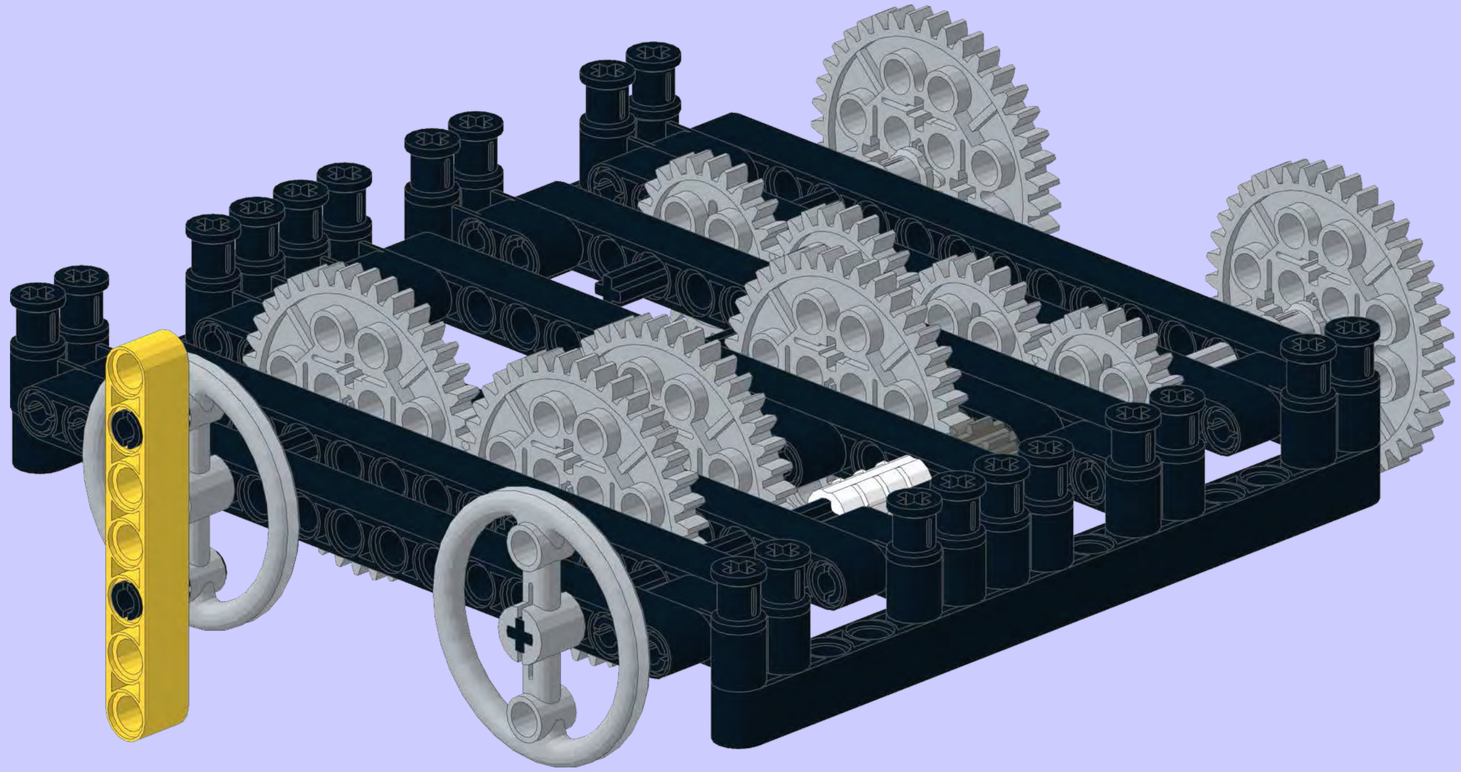

18

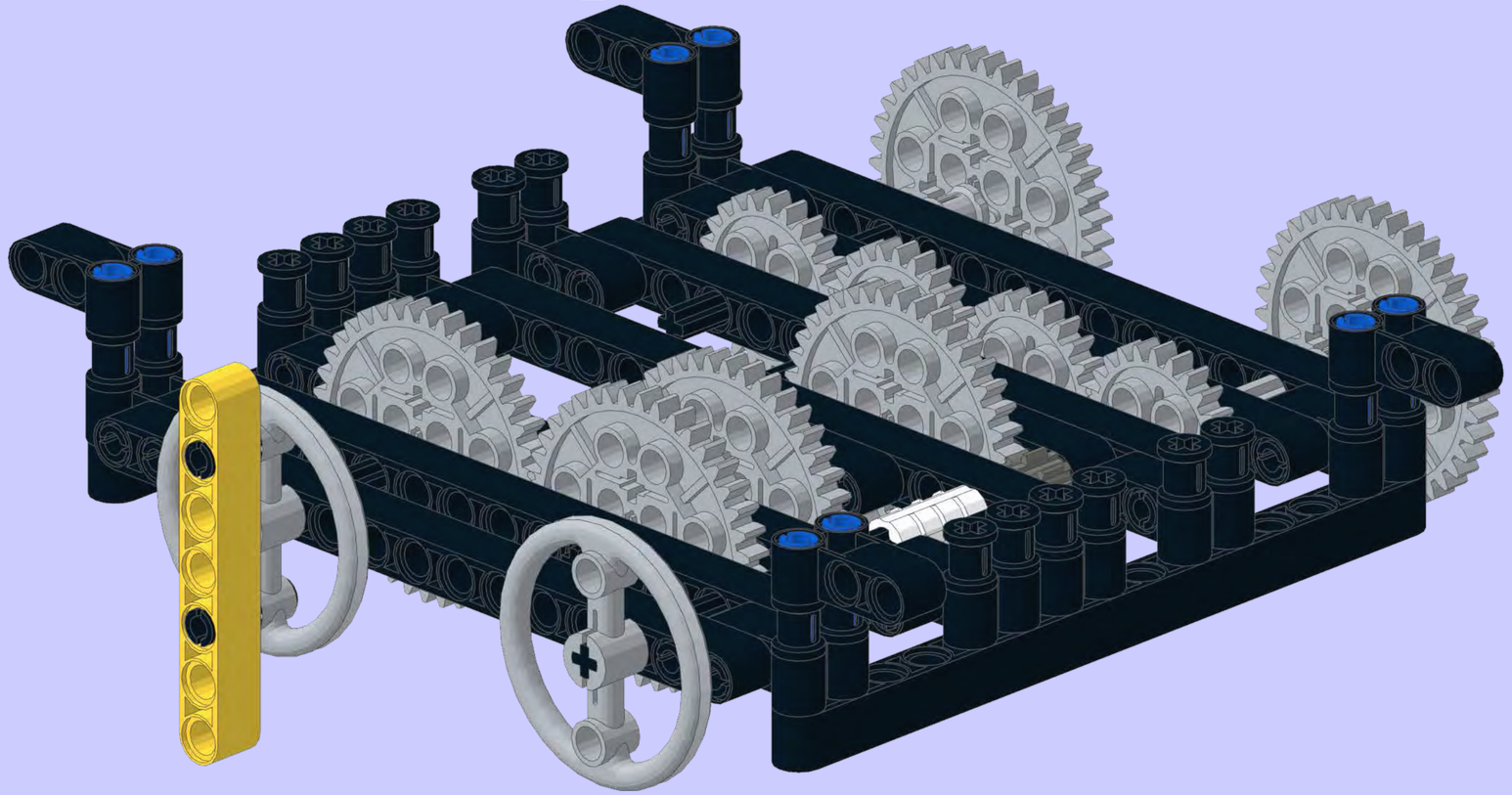

1

## Power rack drives left and right front stacks - using standard base

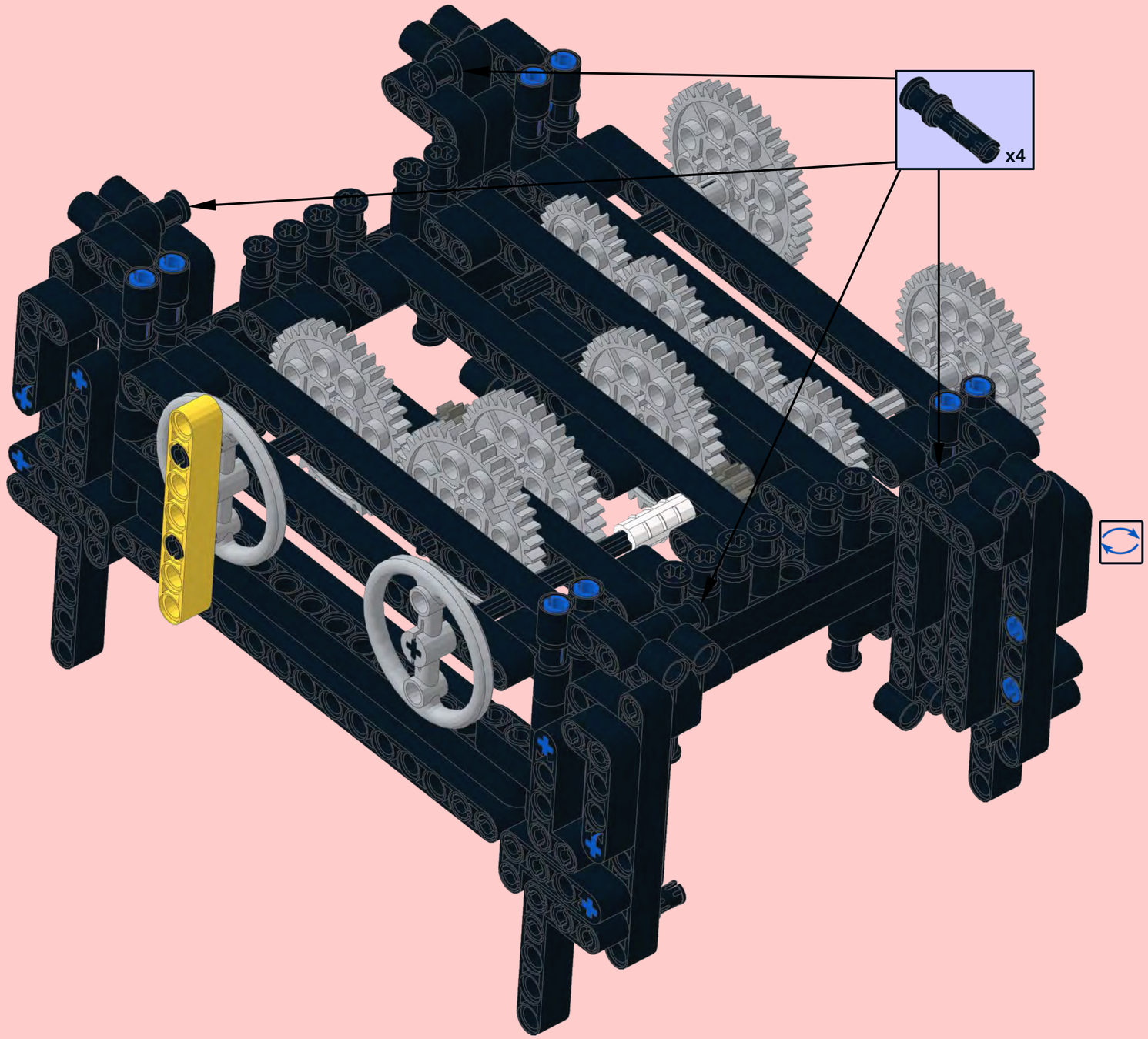

2

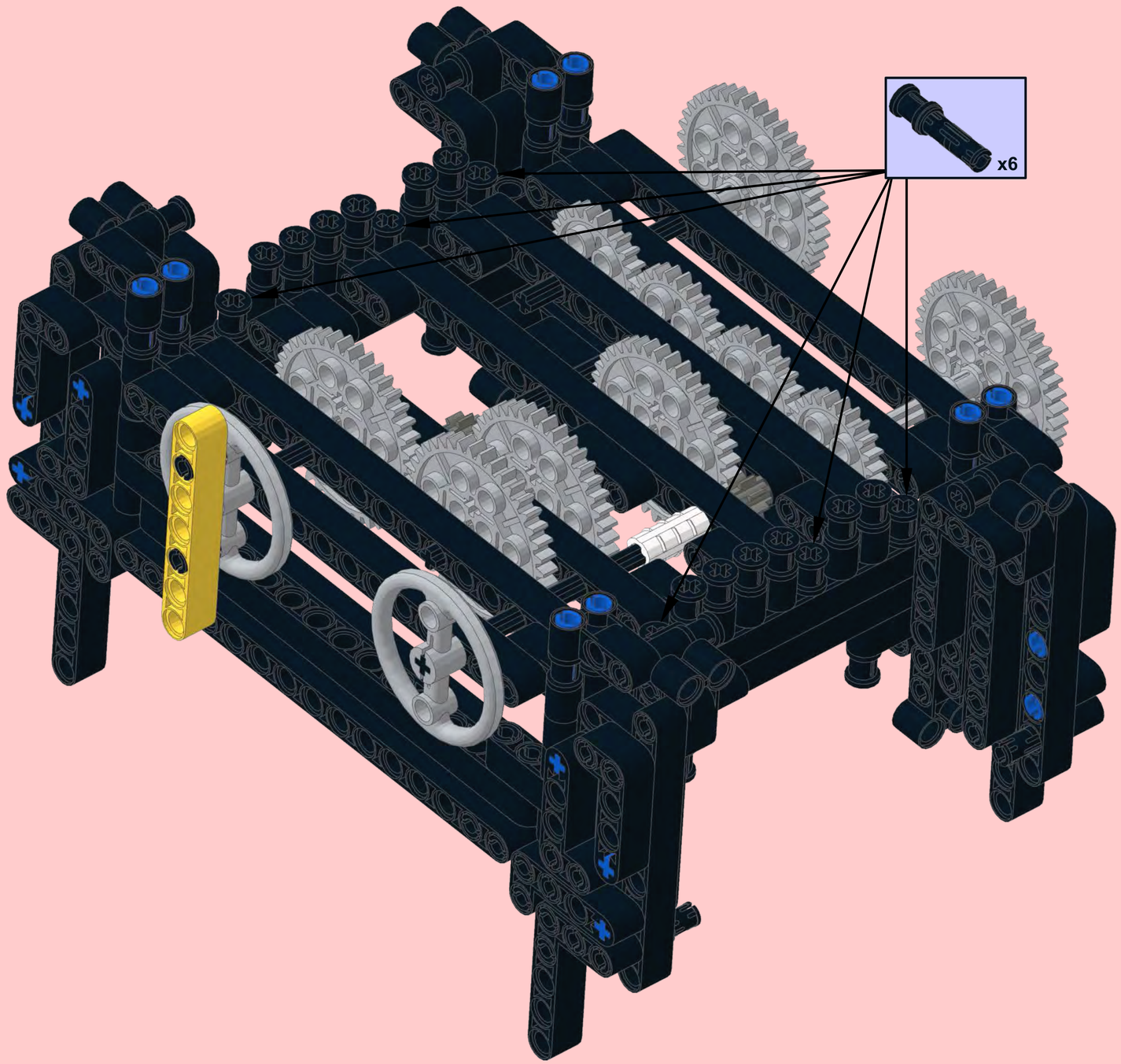

3 4x

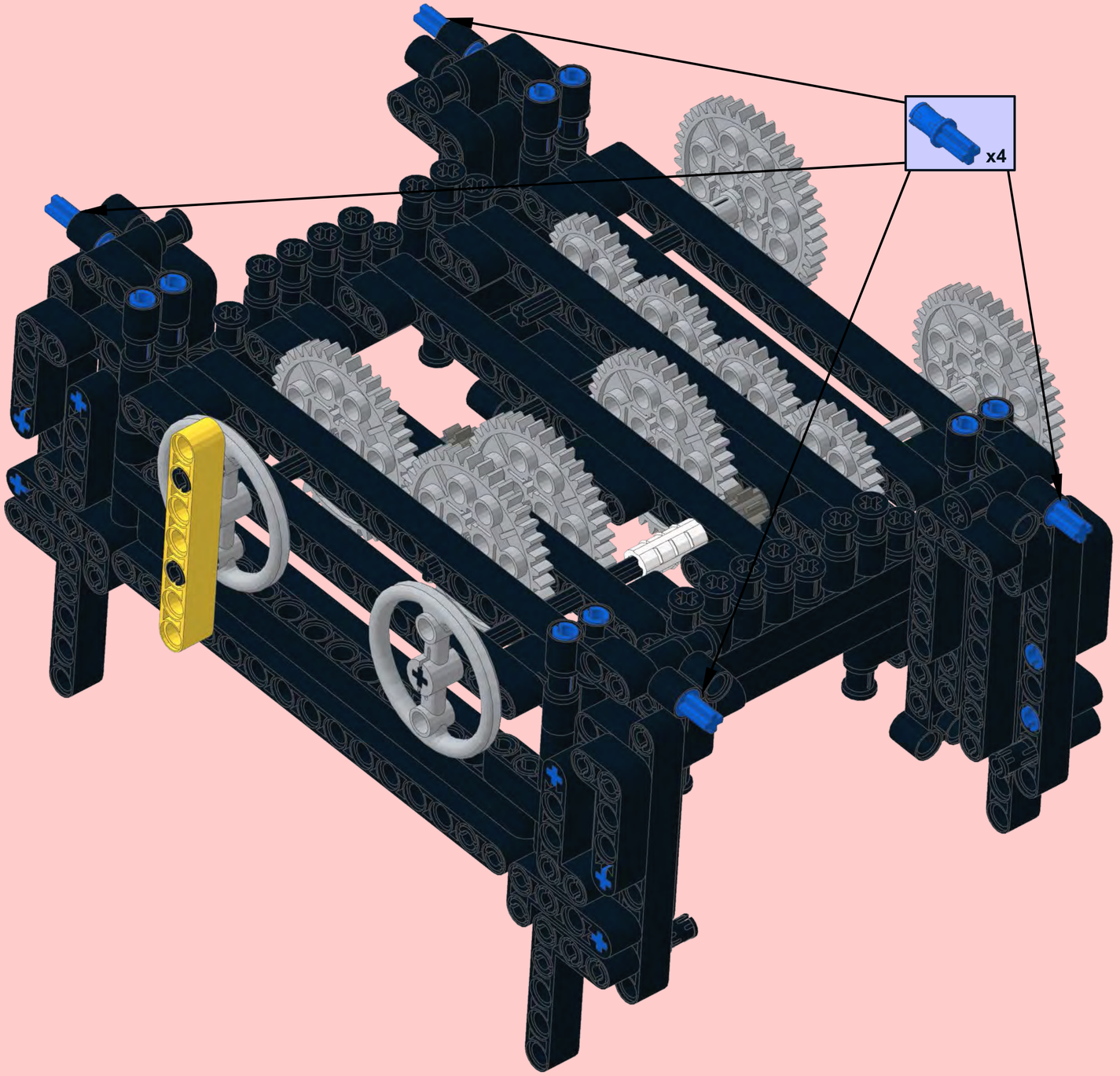

1

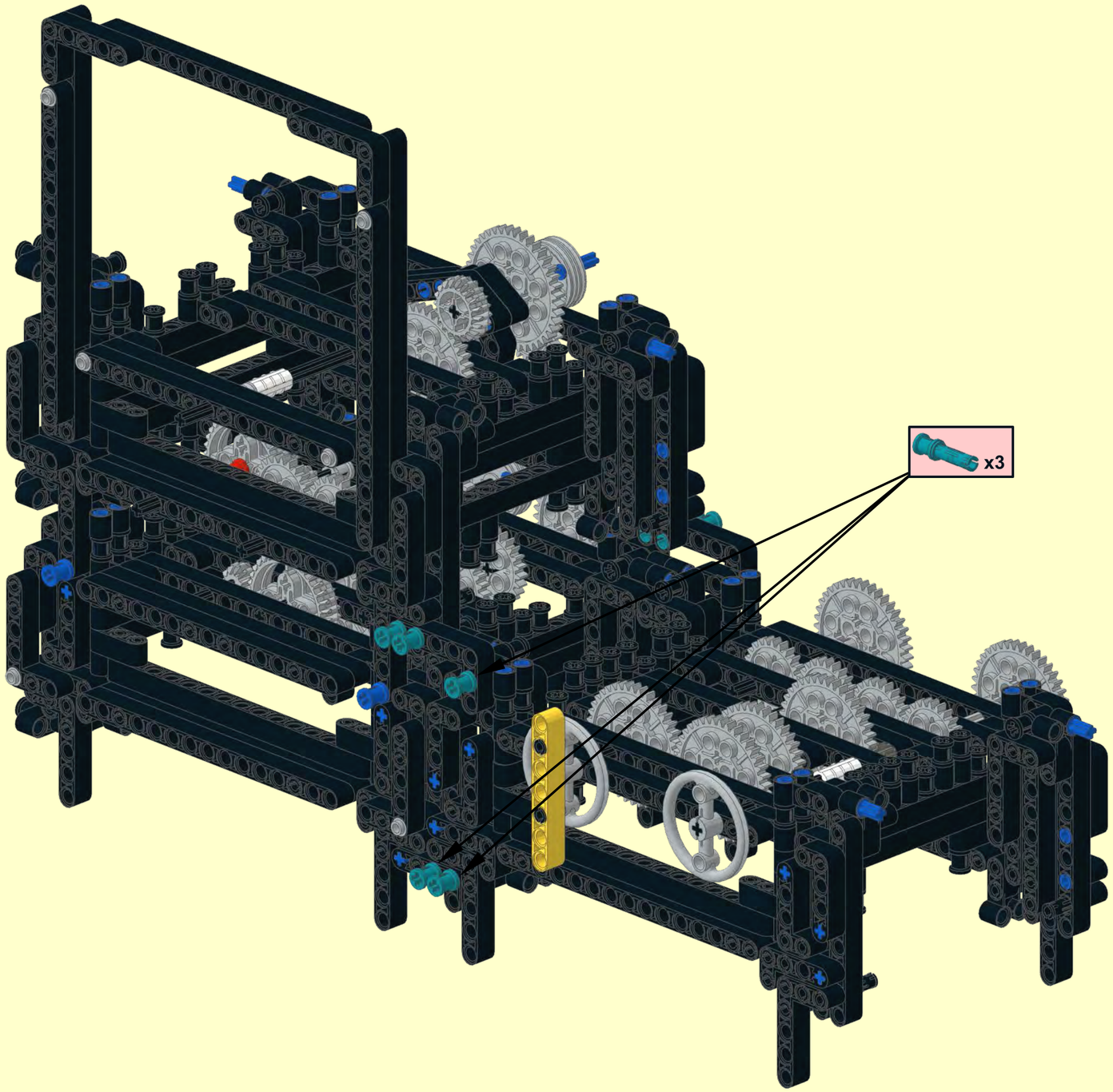

2

3x

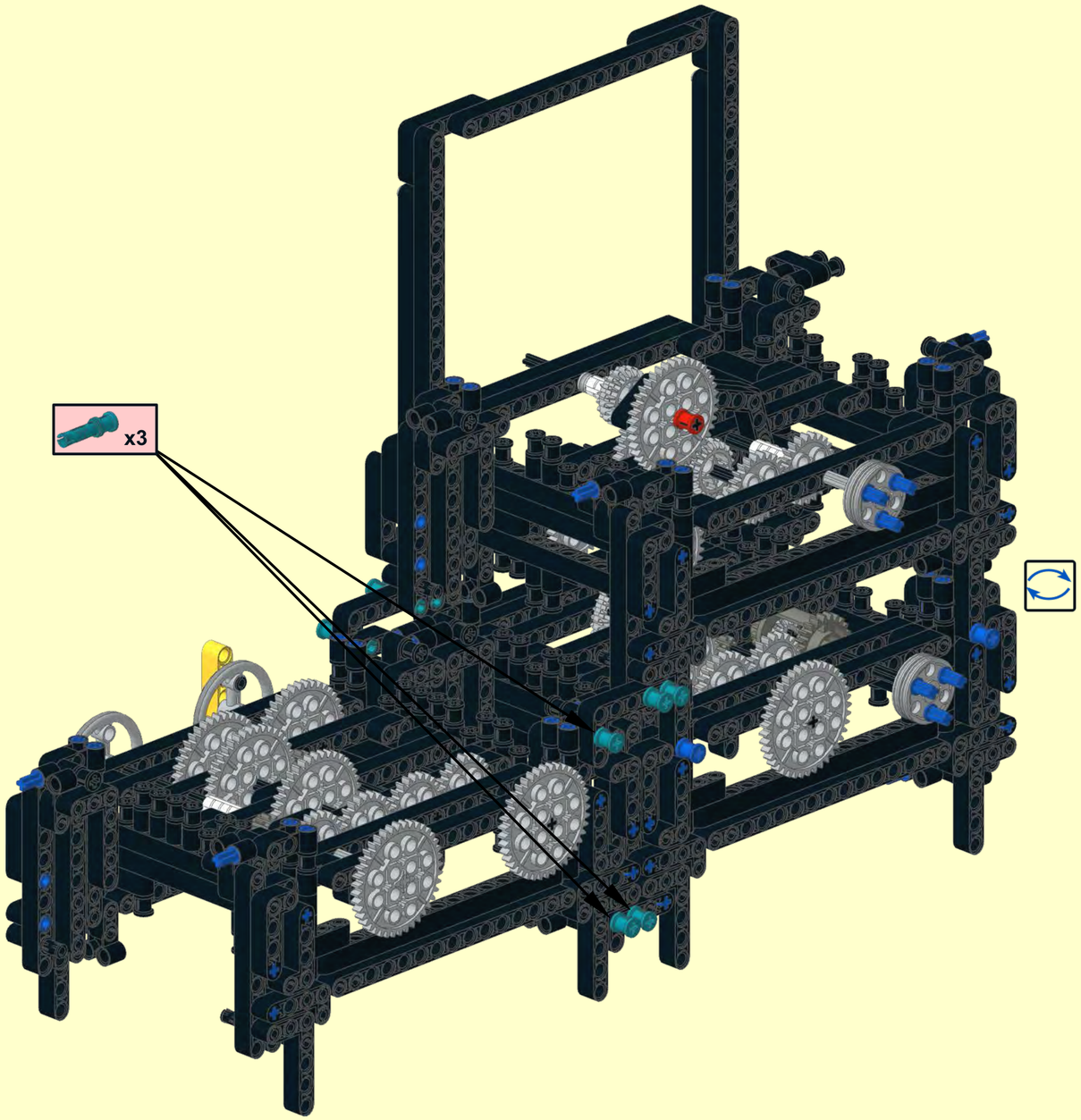

3

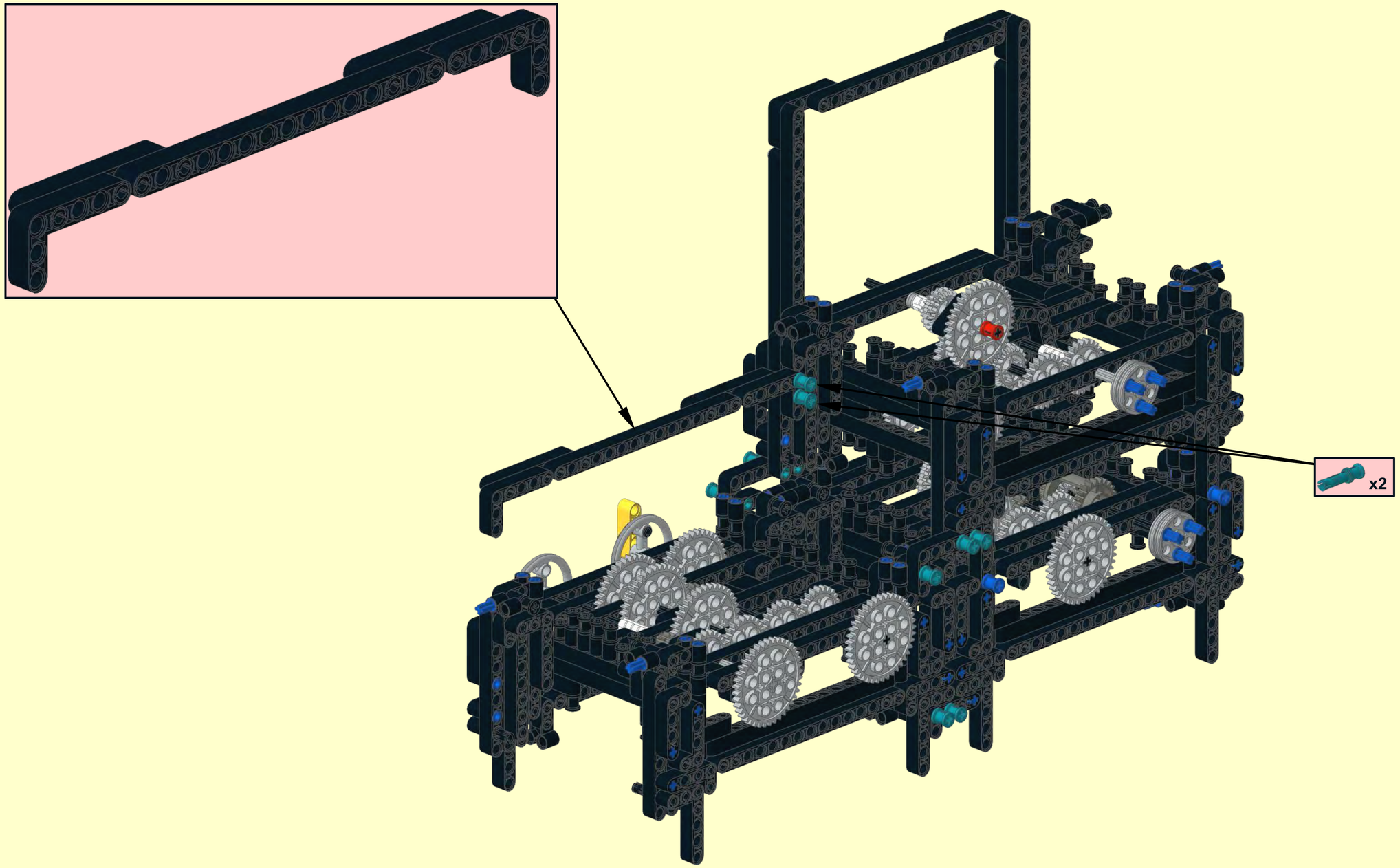

4

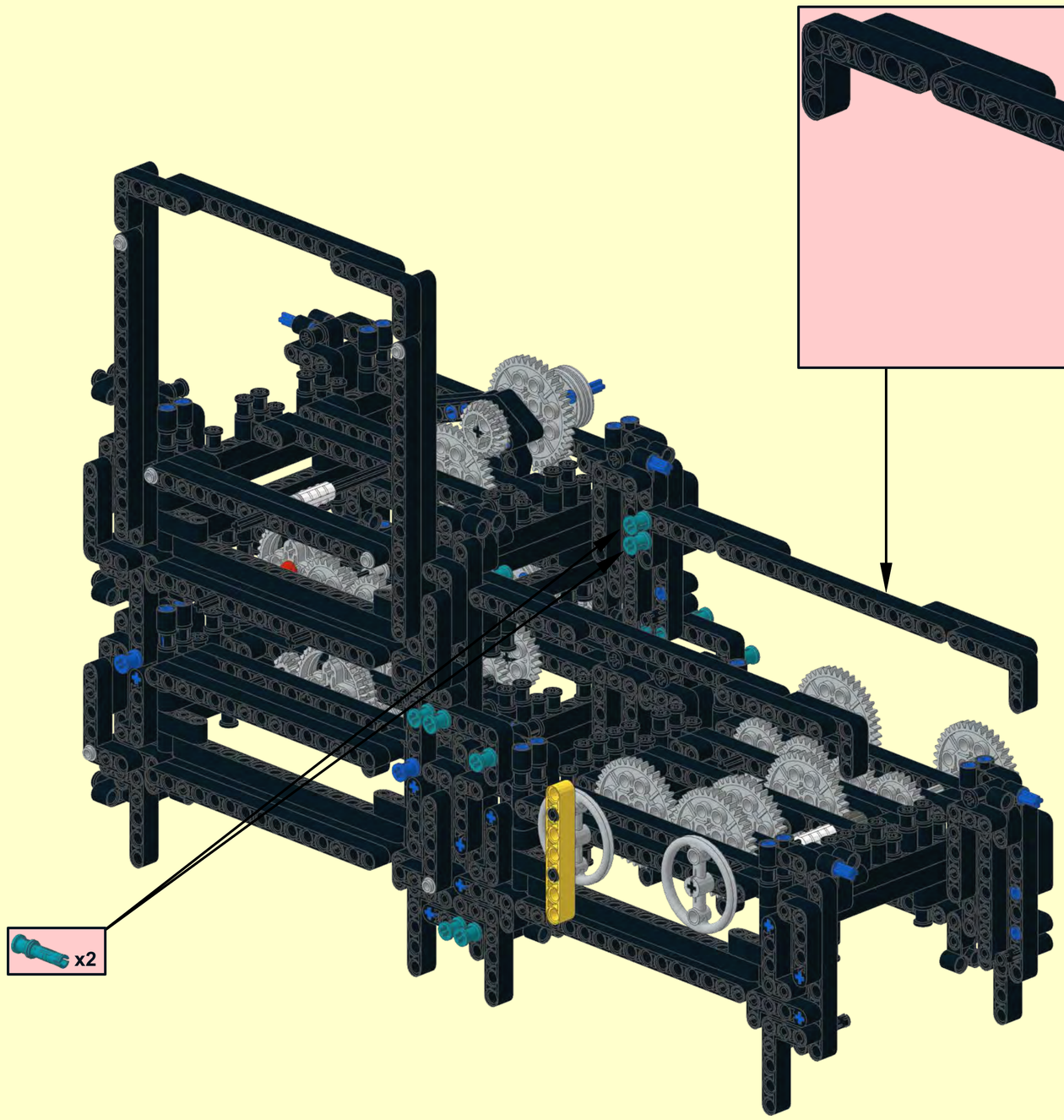


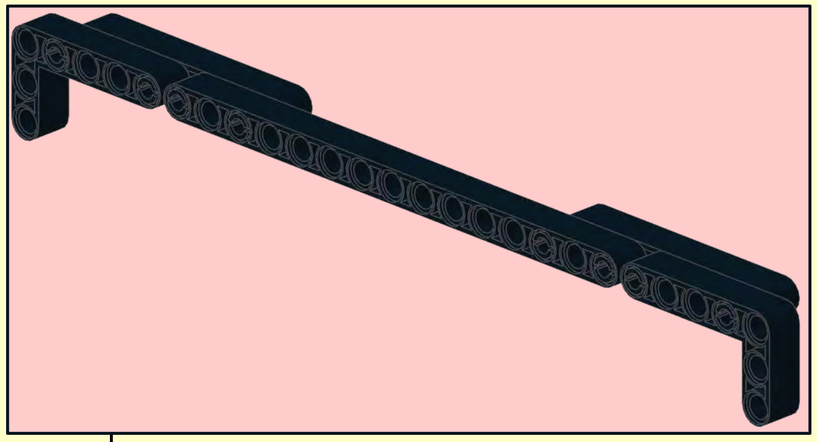

1

# Right Bottom Front Bottom (RBF) rack - using extended base

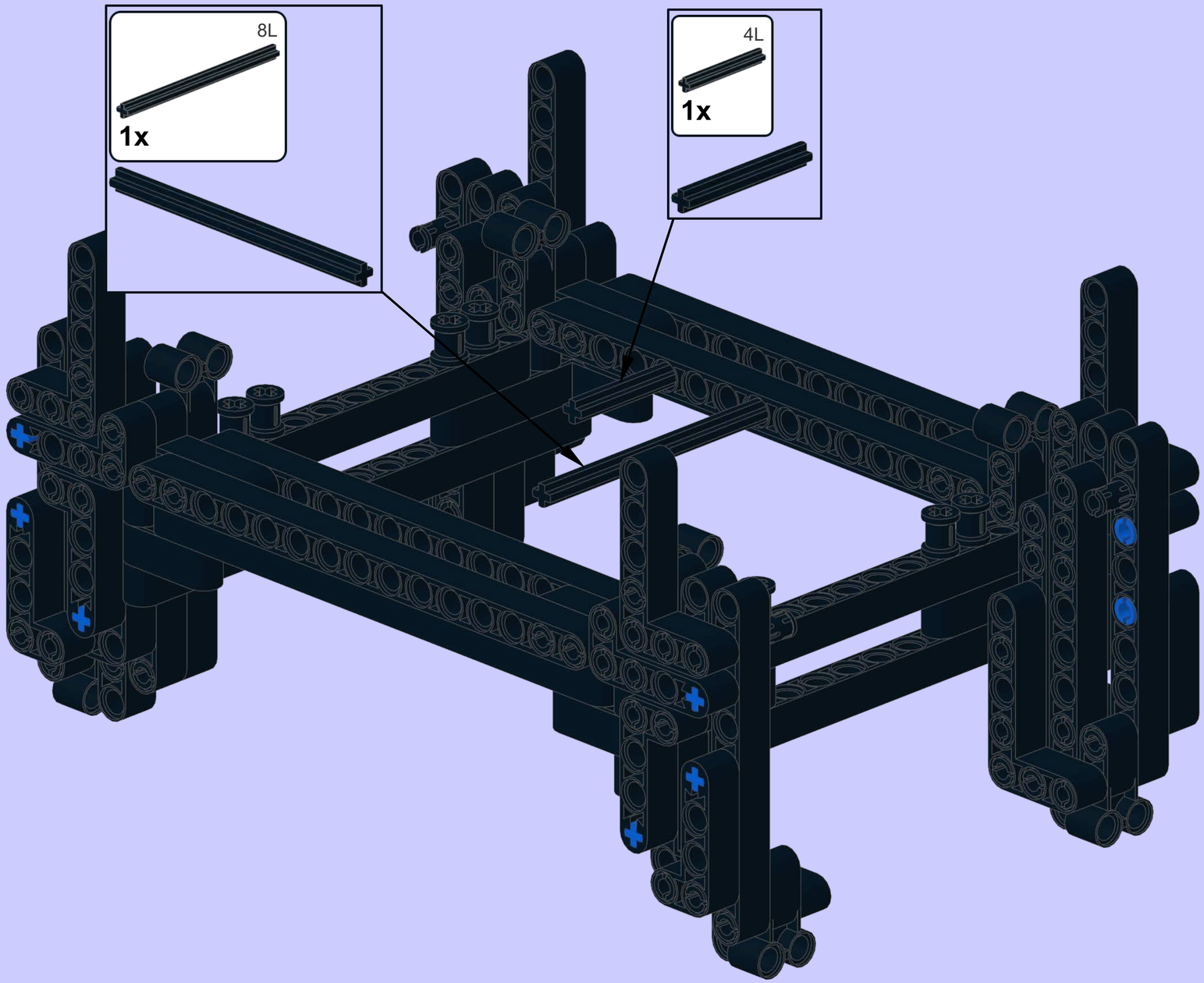

2

24T

2x

40T

1x

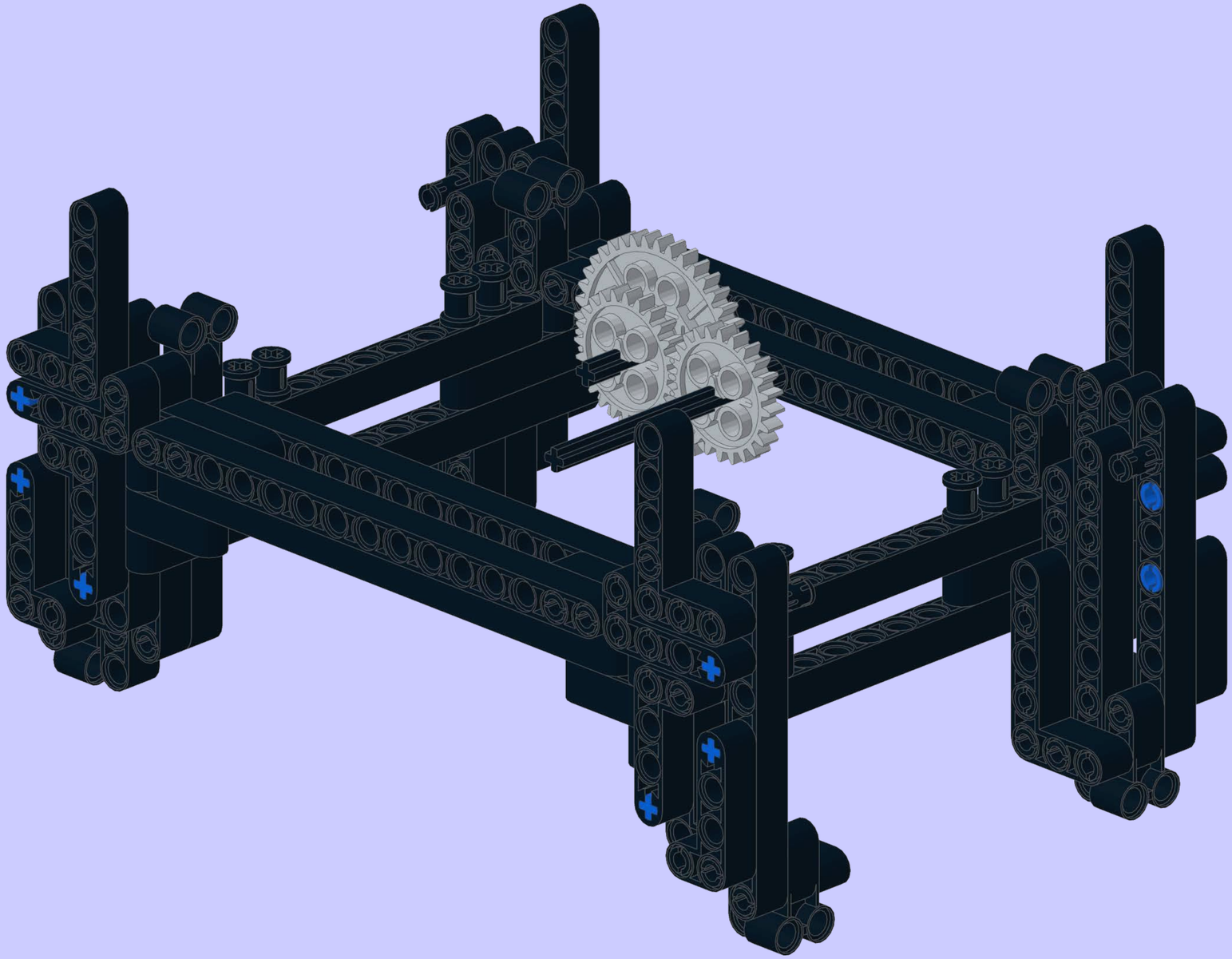

3

2x

4x

x2

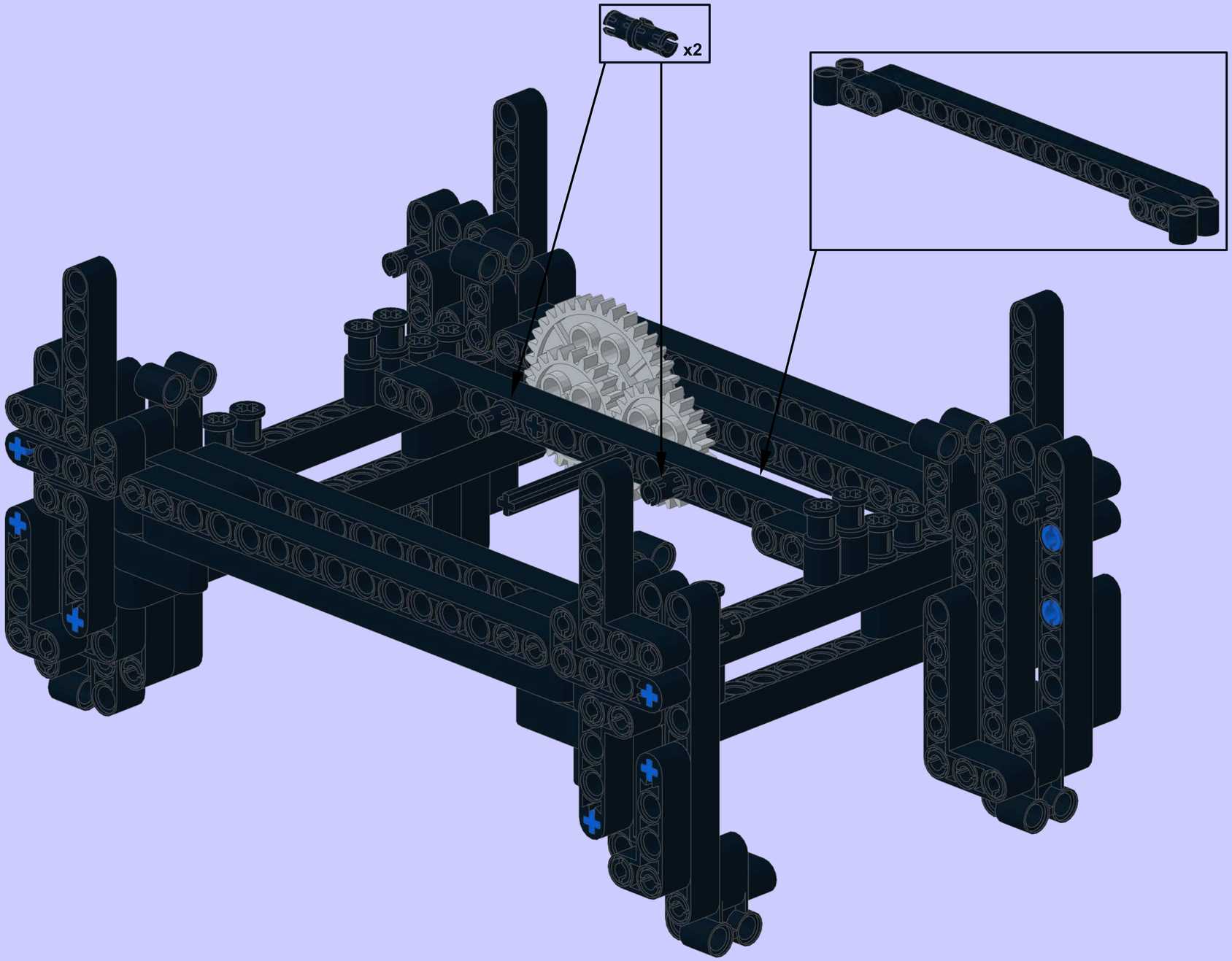

4

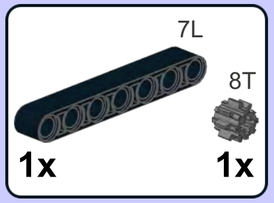


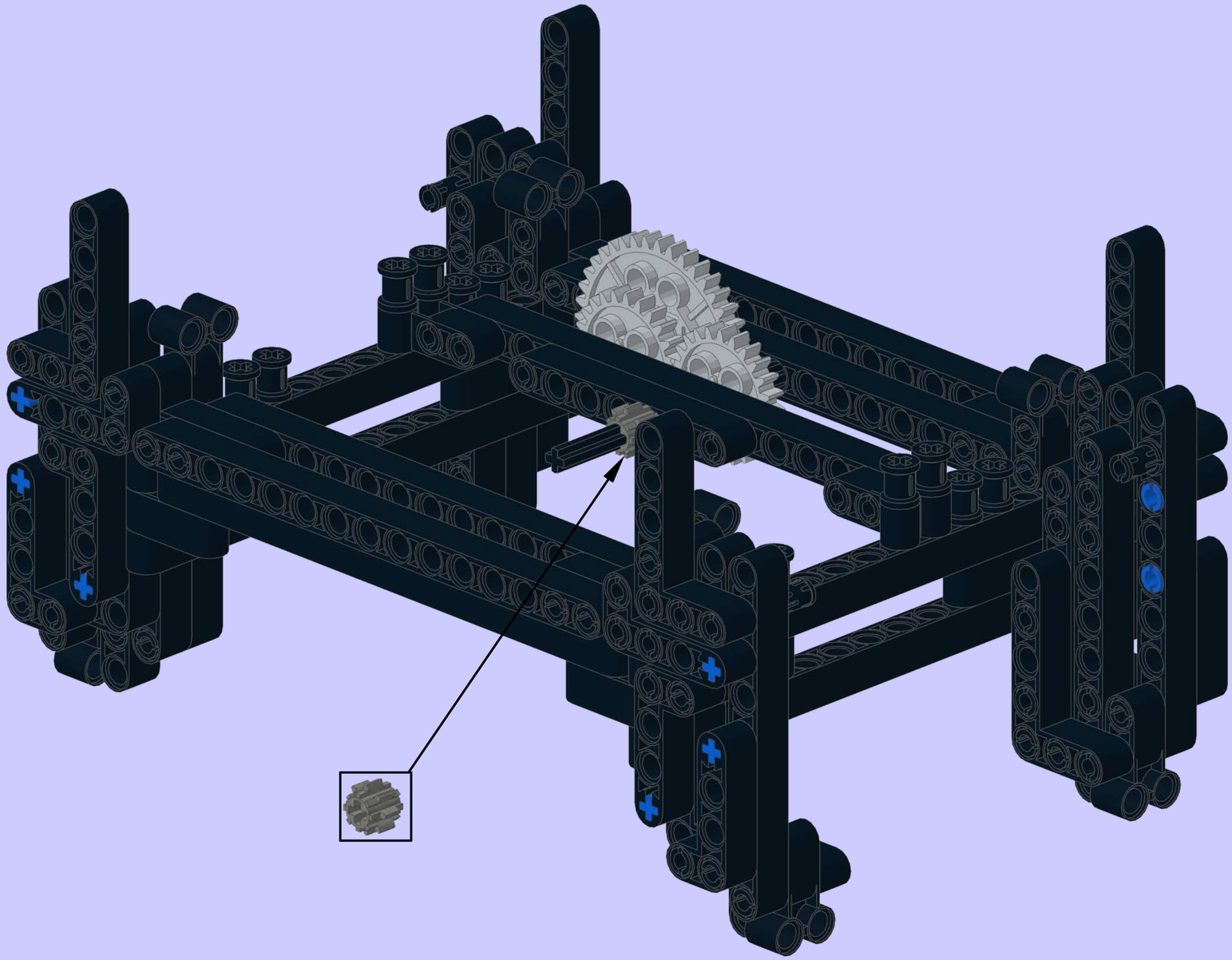

1

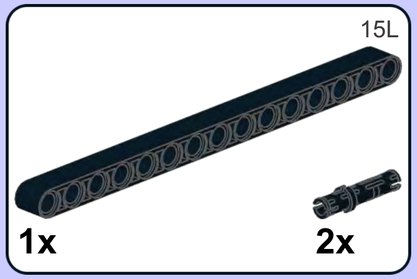


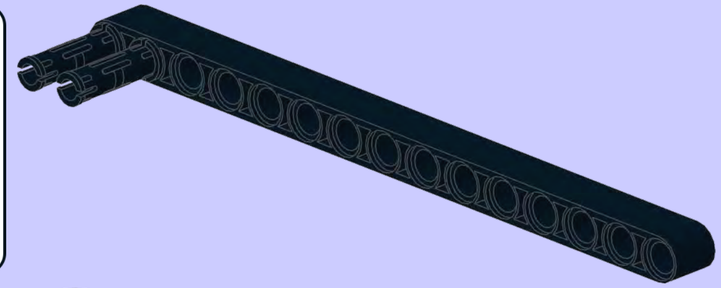

2

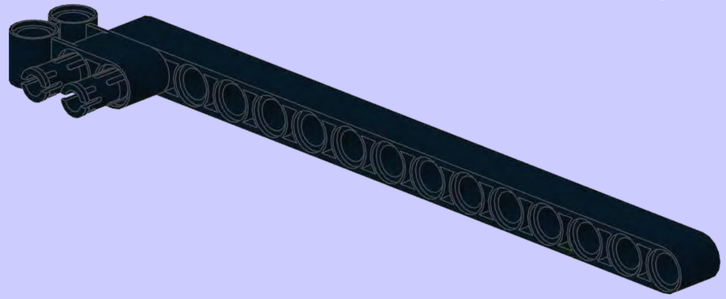

5

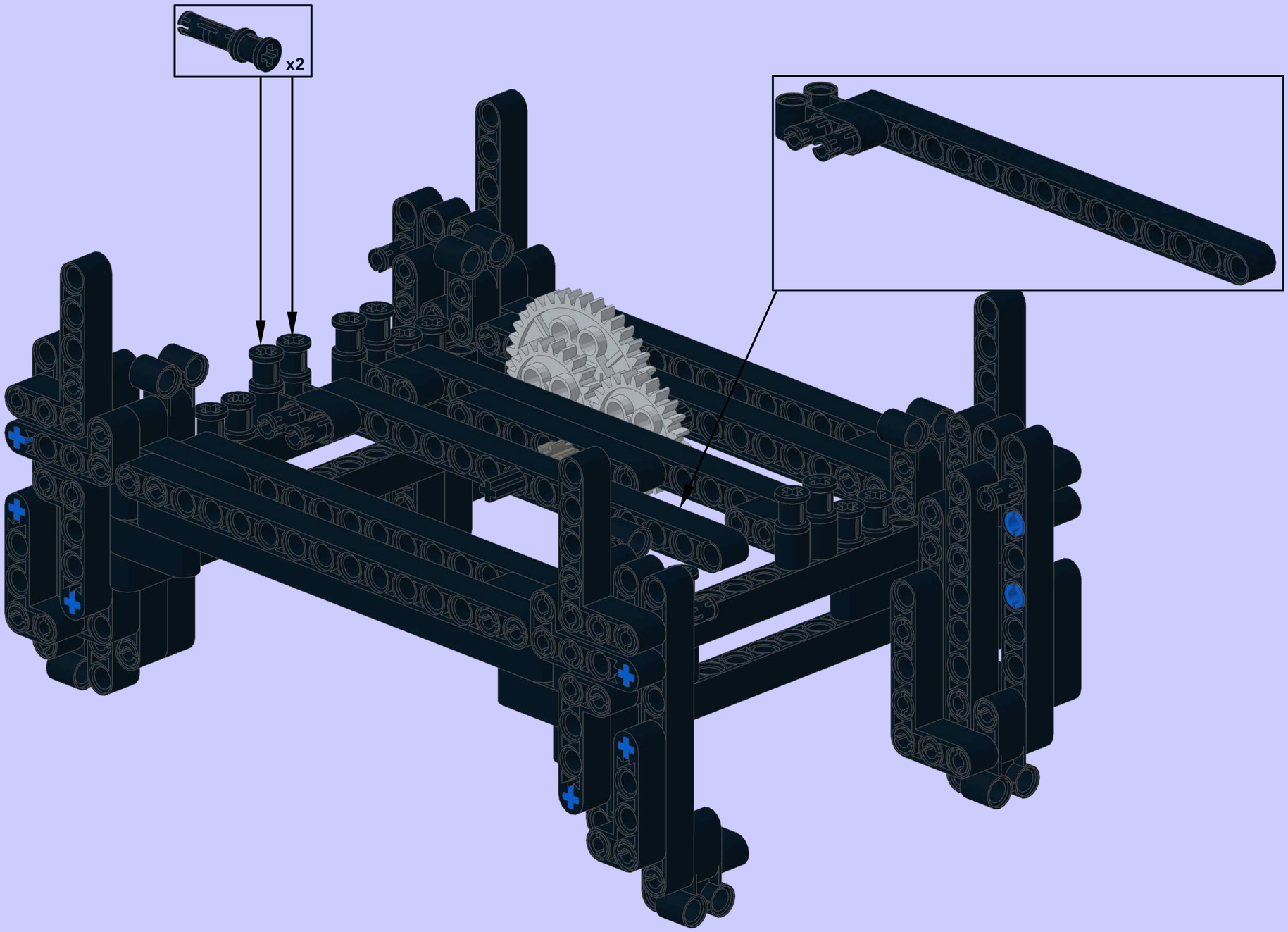

6

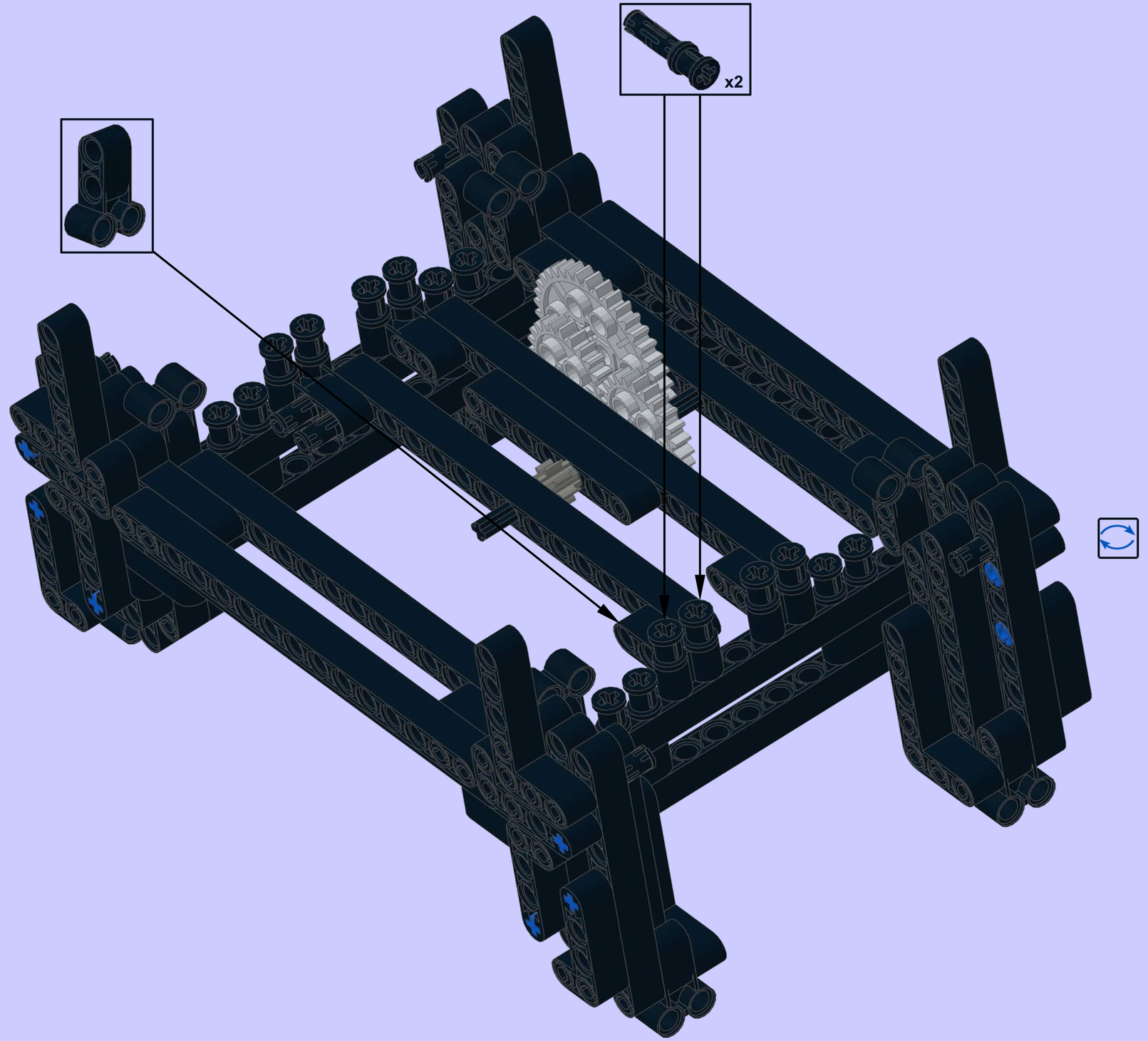

7

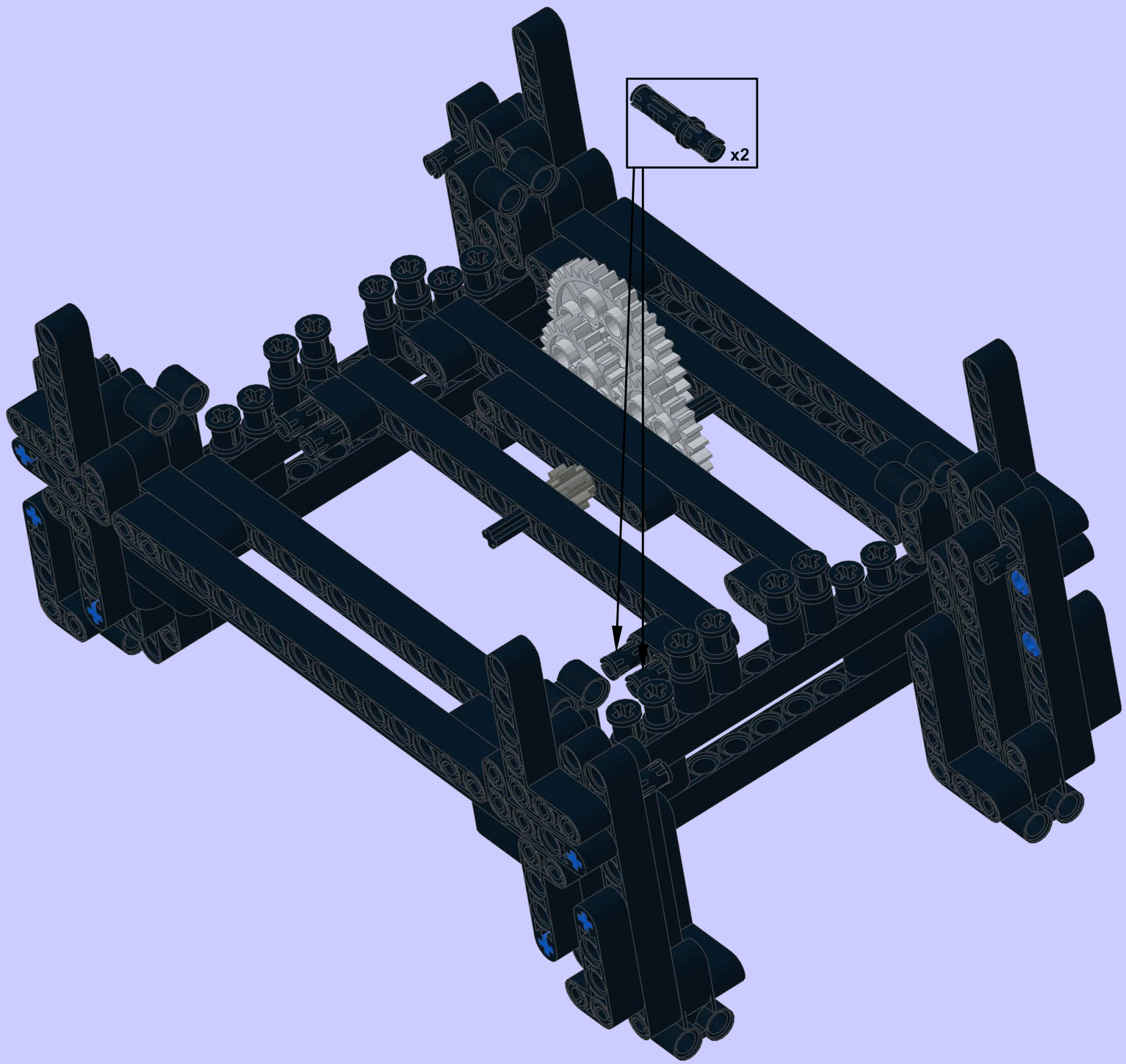

8

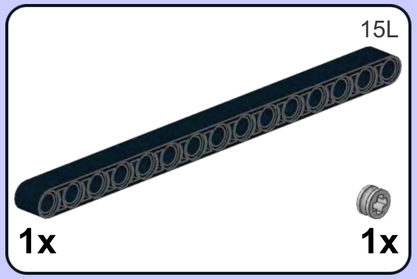


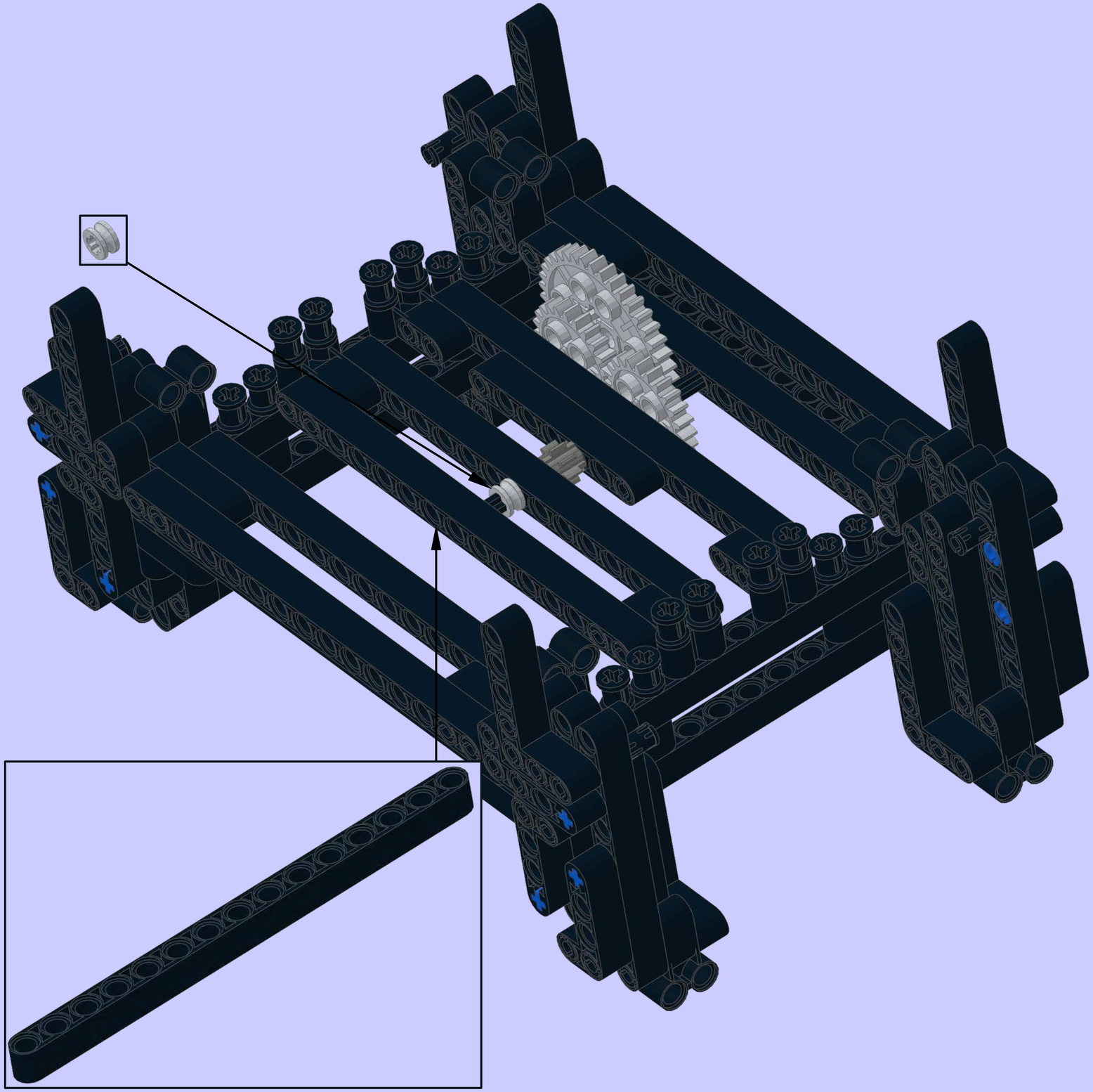

9

12T

1x

40T

1x

6L

1x

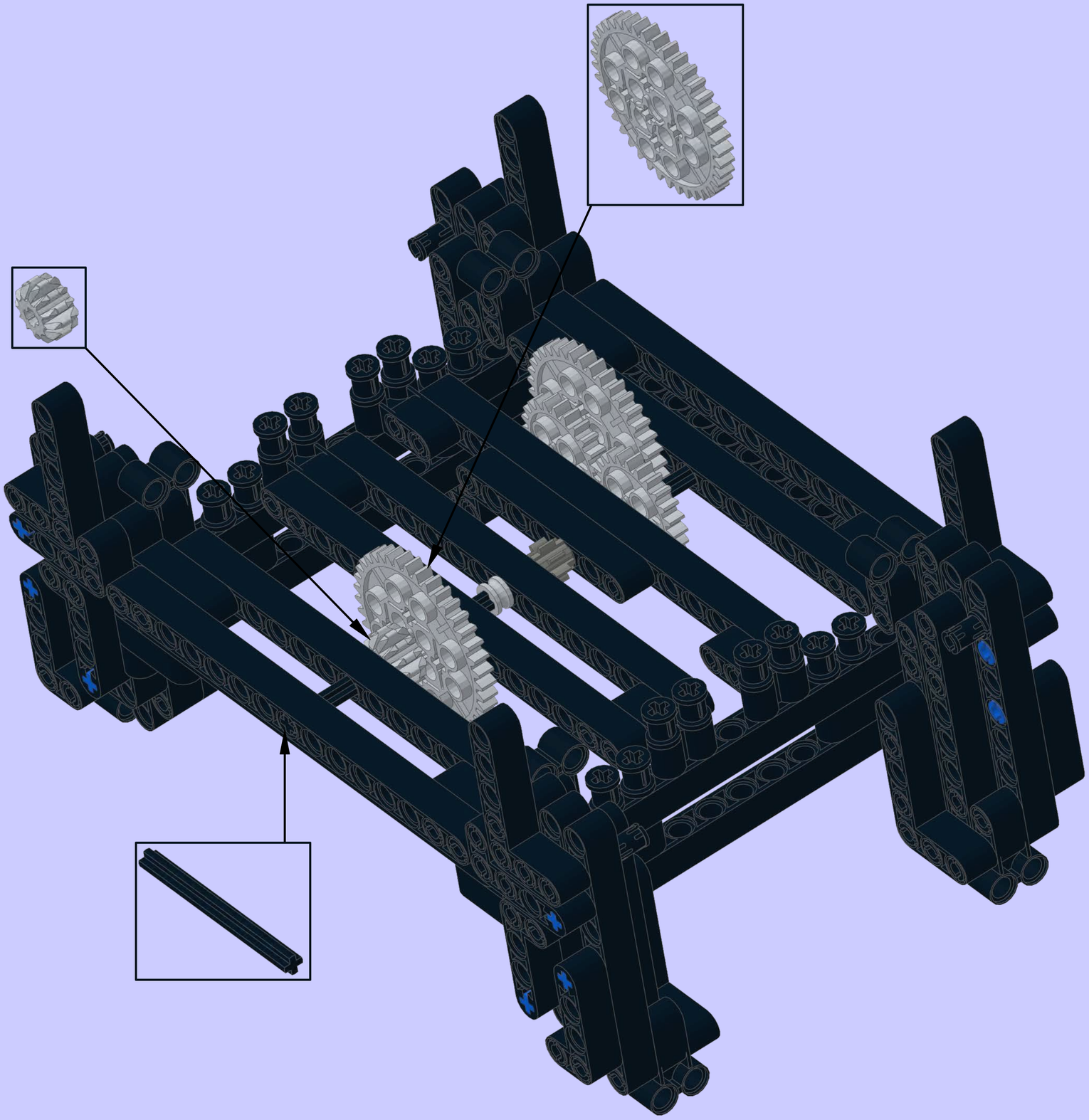

**10**

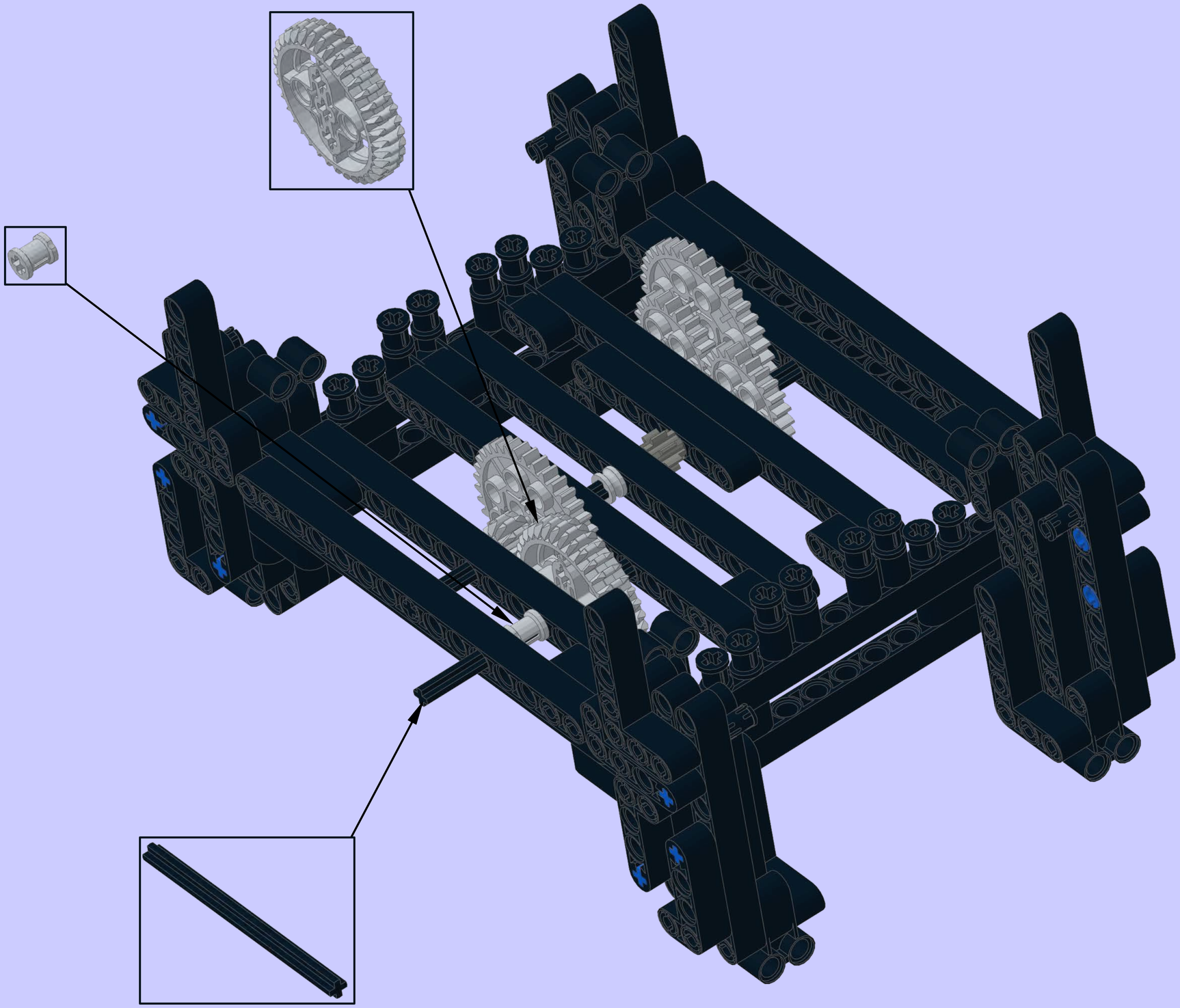

# 11

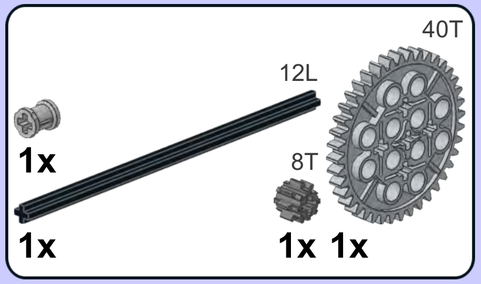


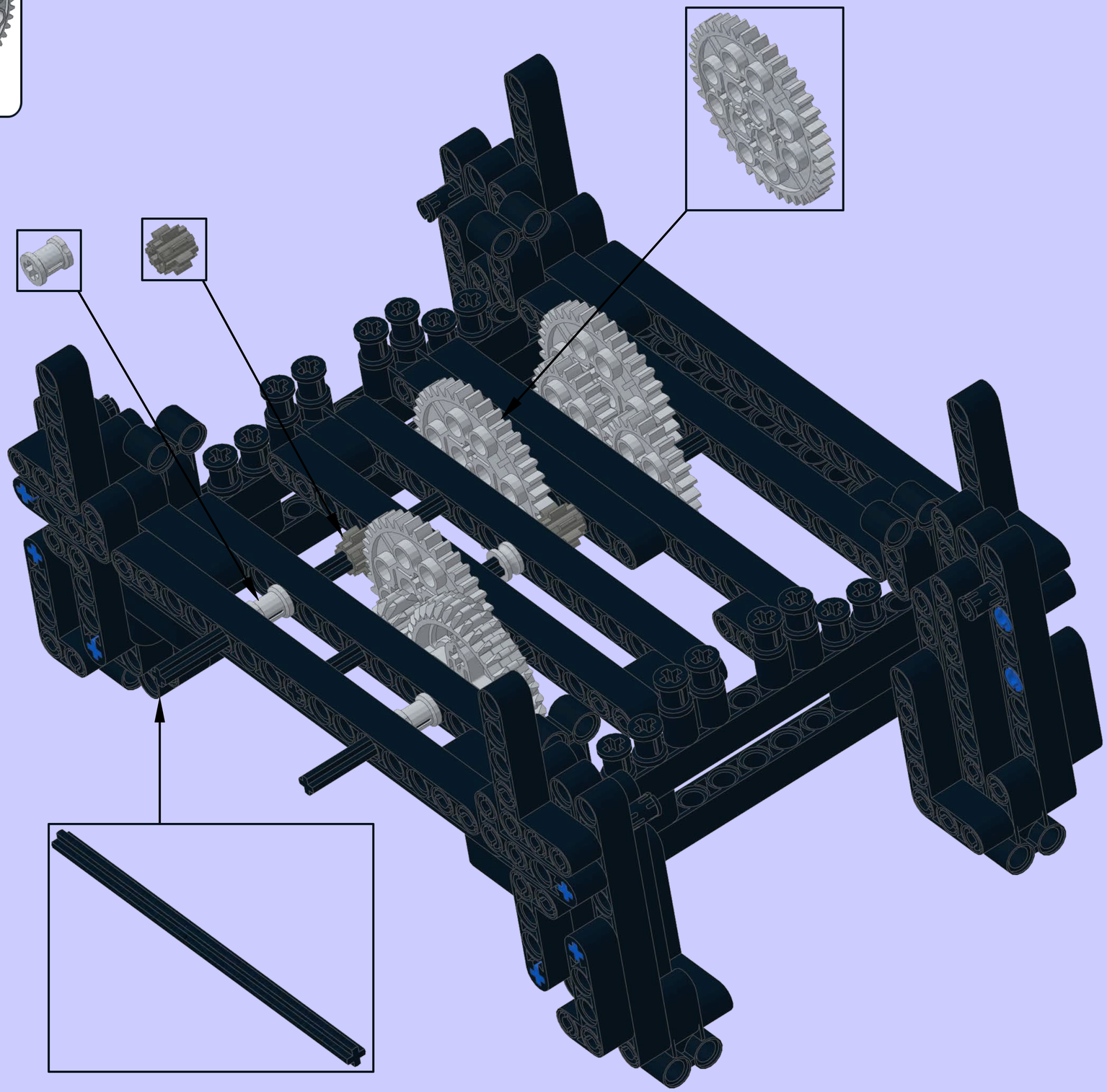

12


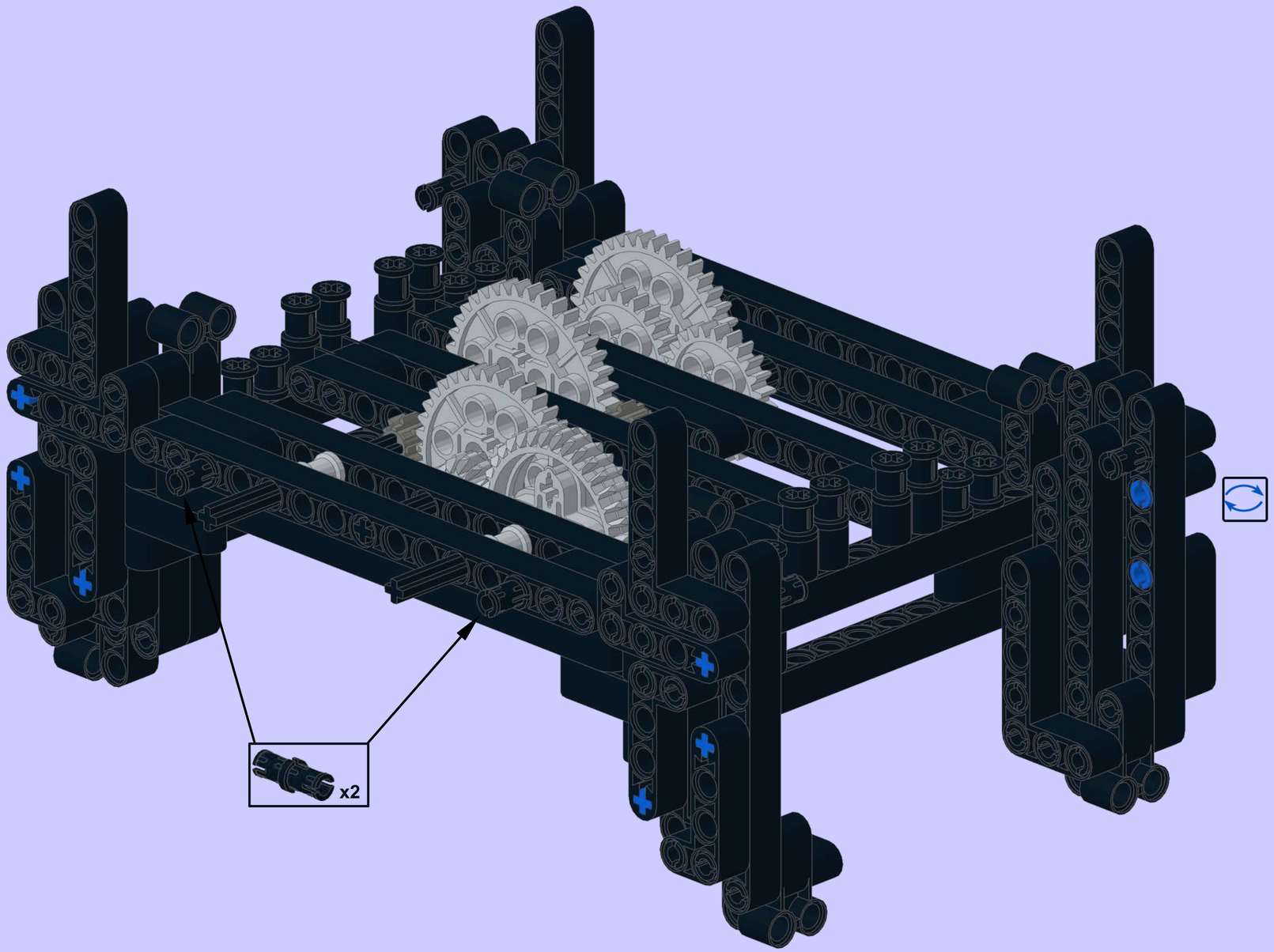

13

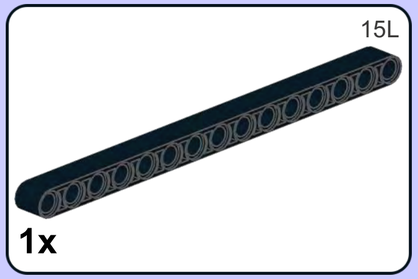


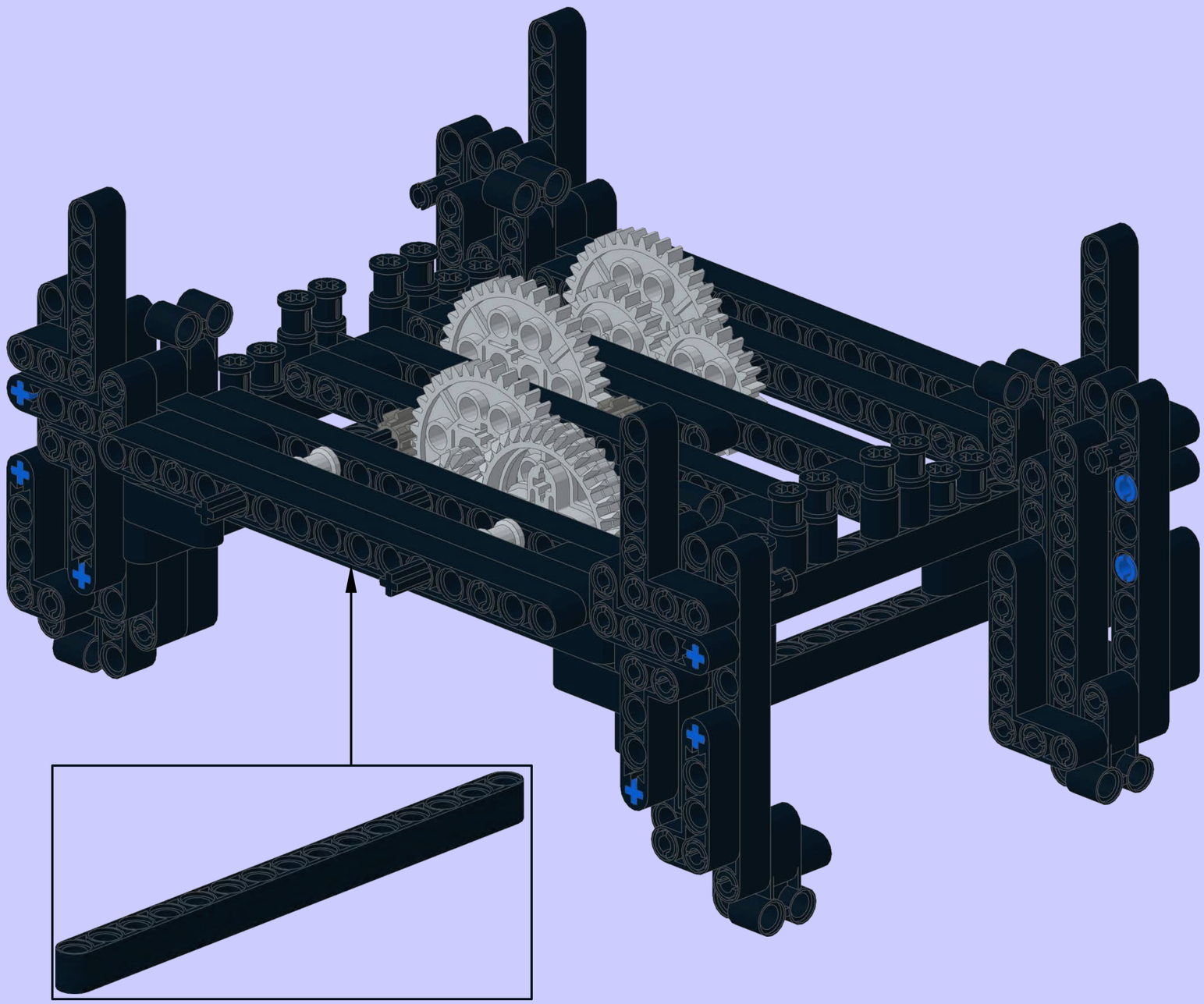

14


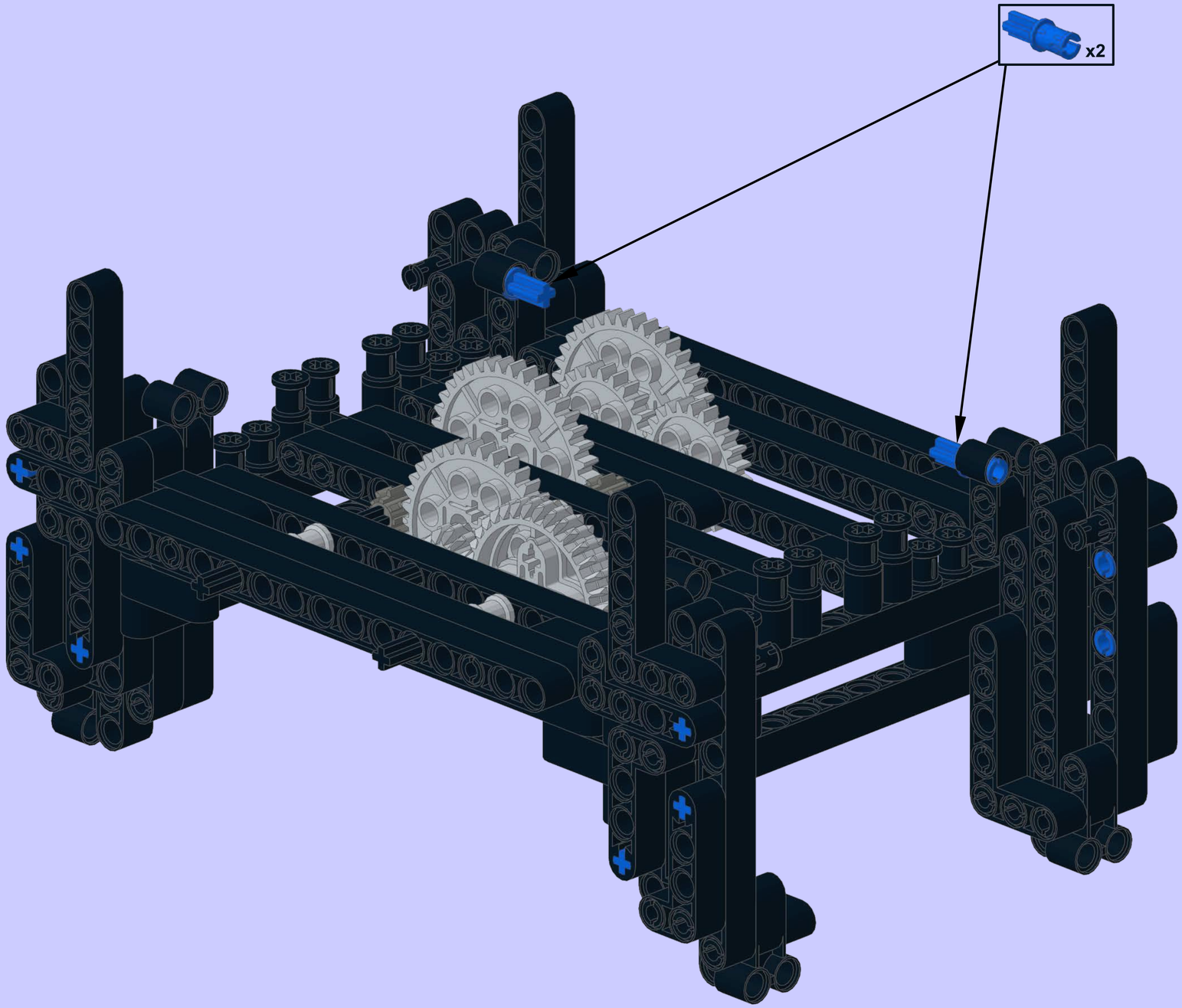

15 4x

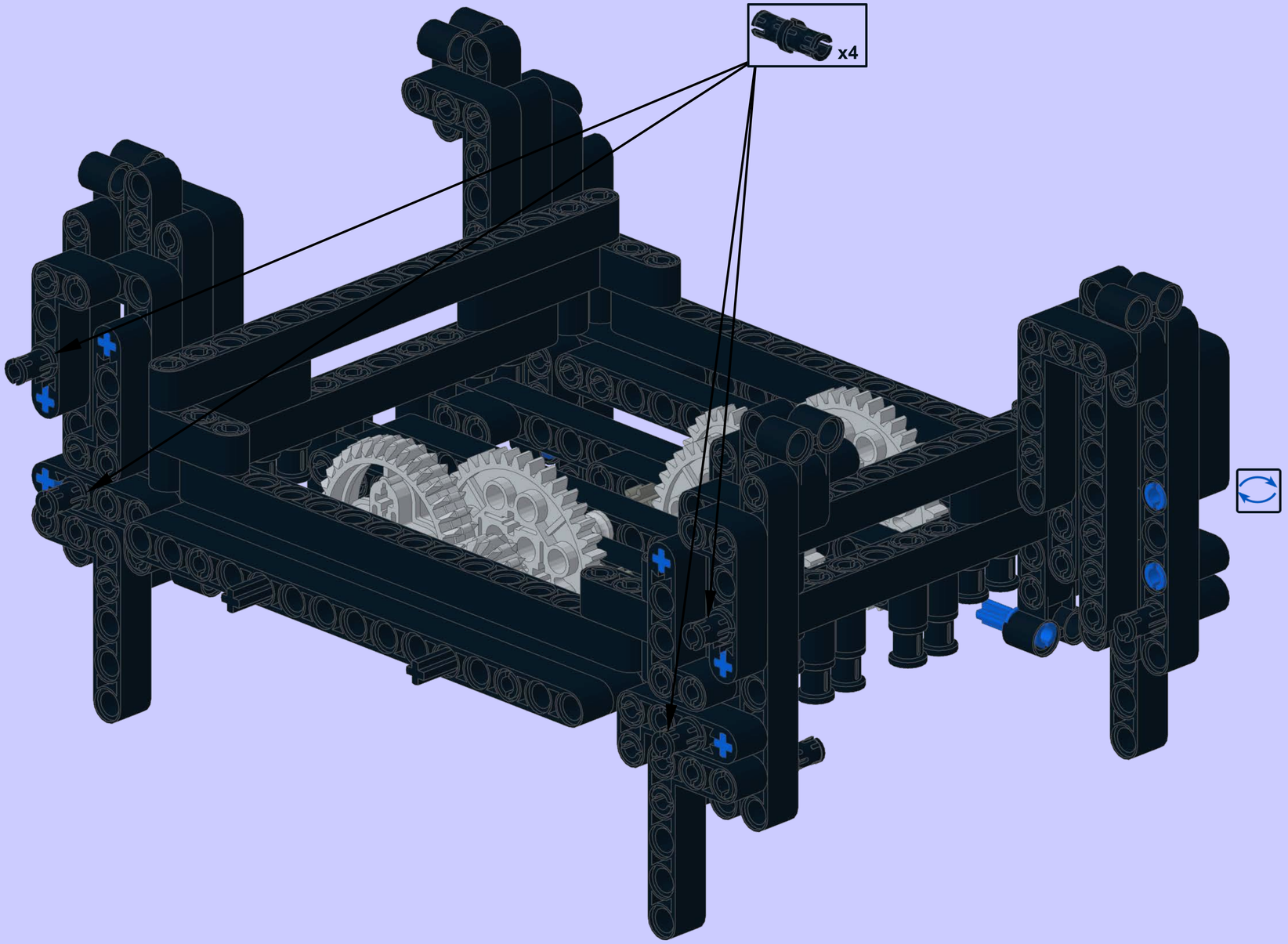

16

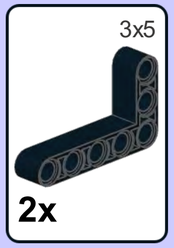


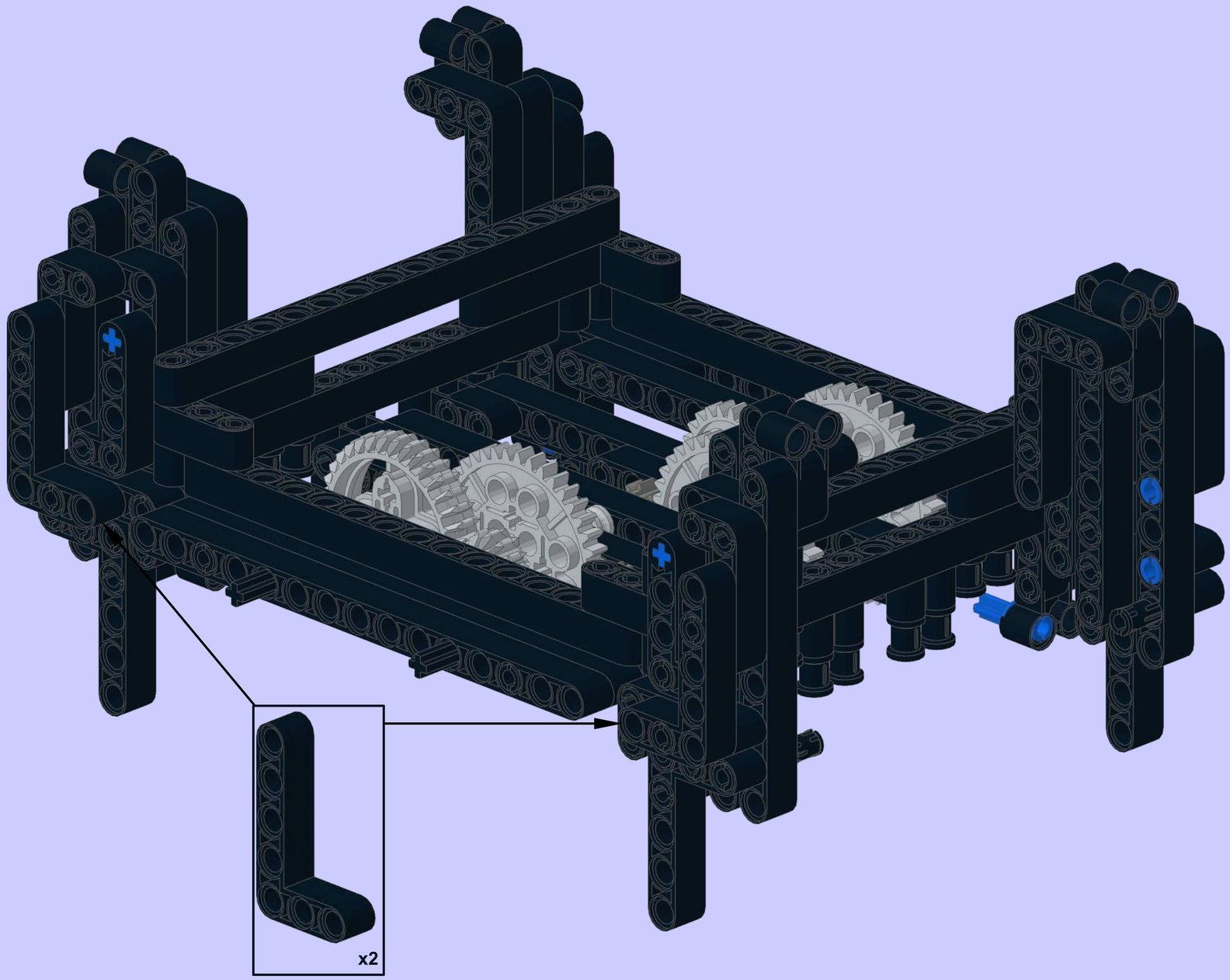

17

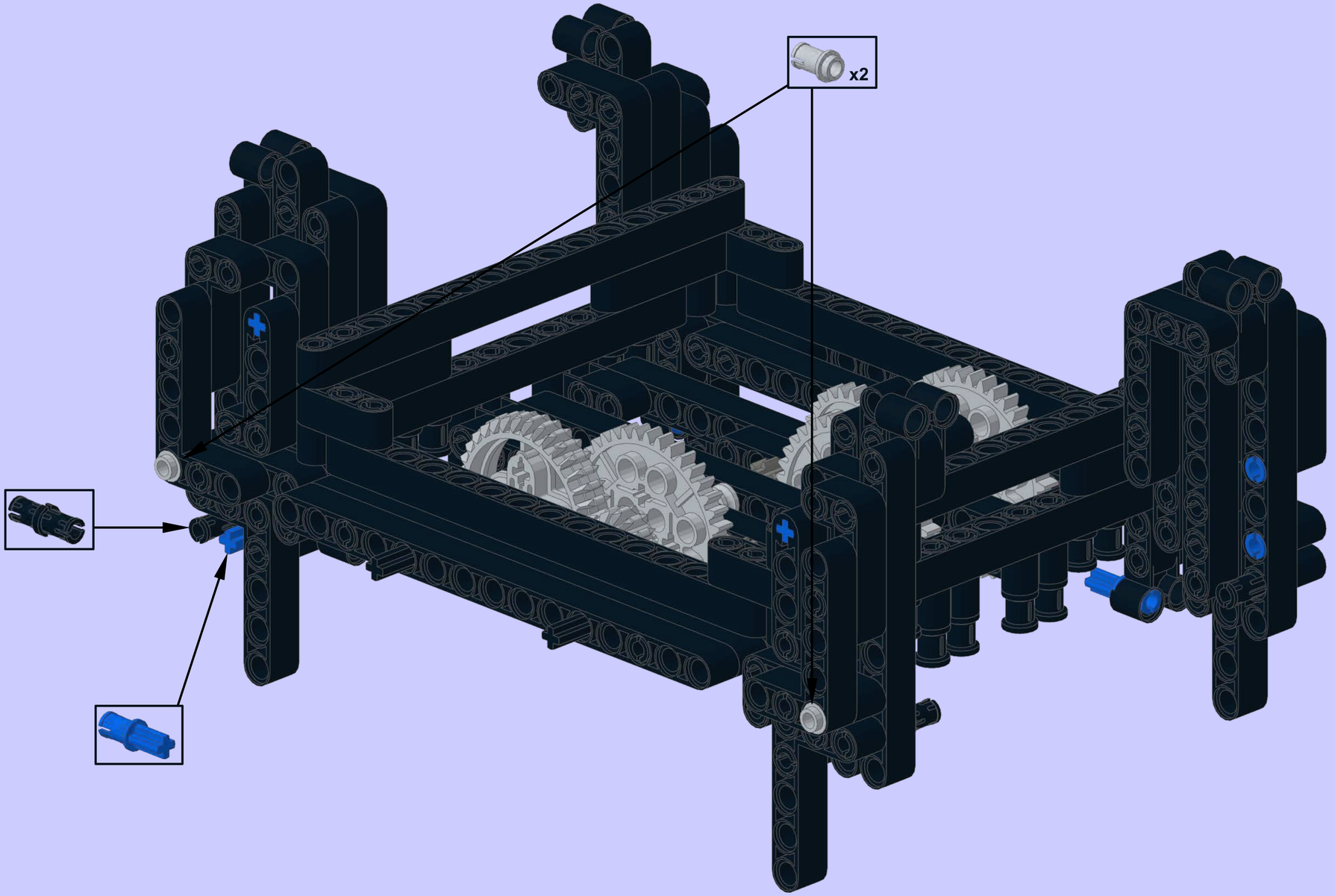

18

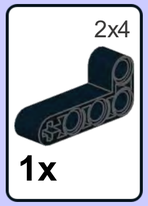


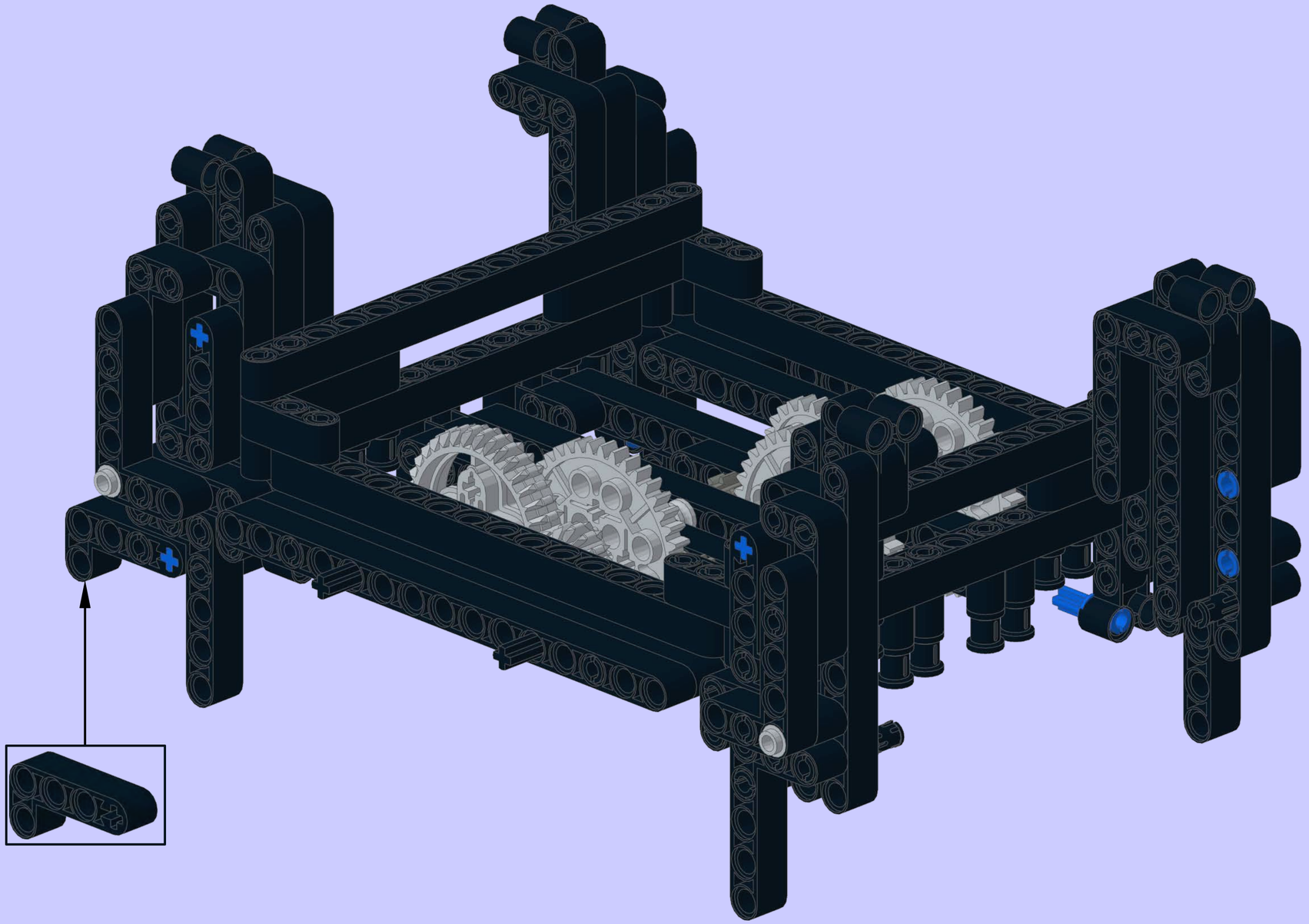

19
2x

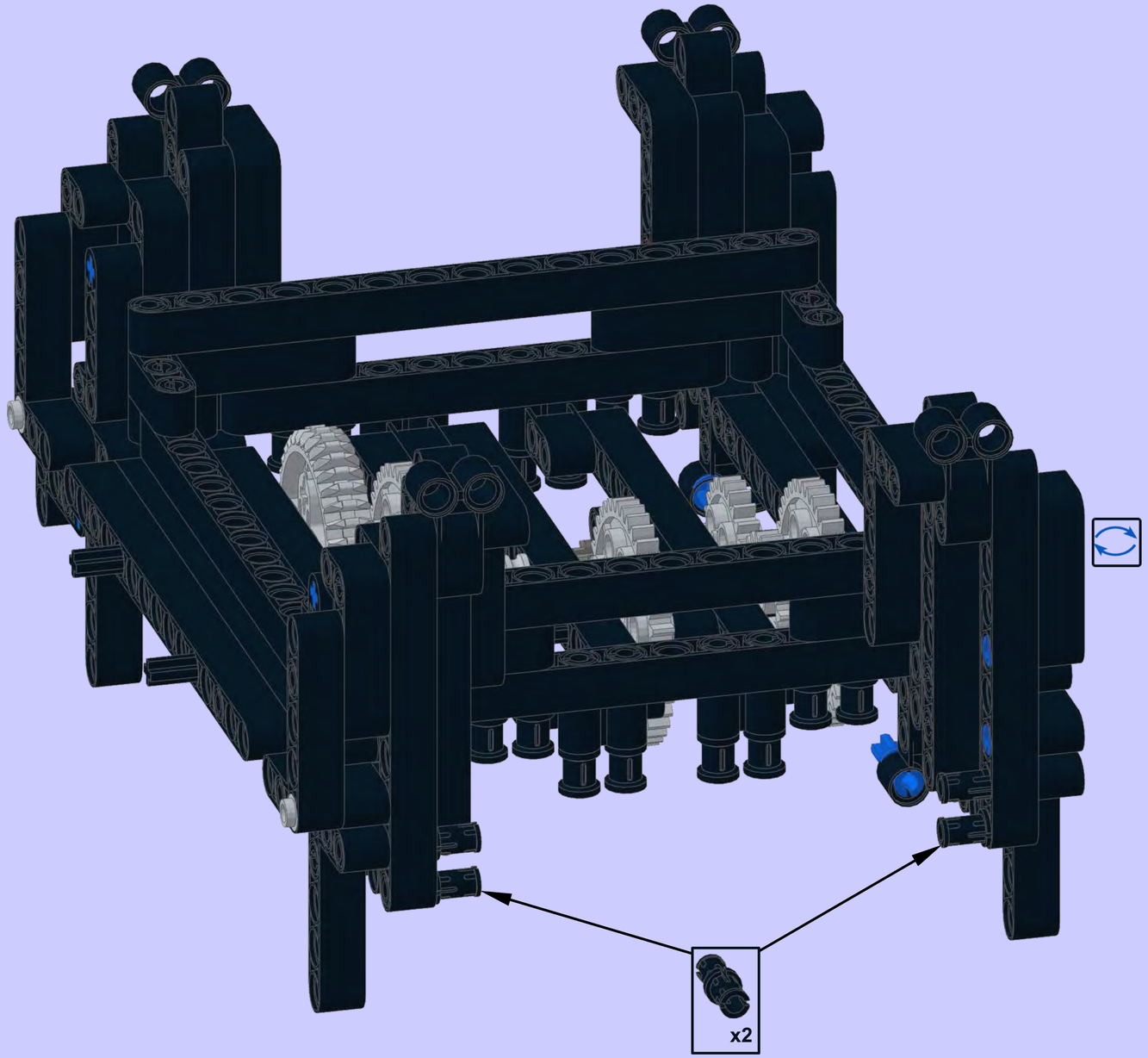

20

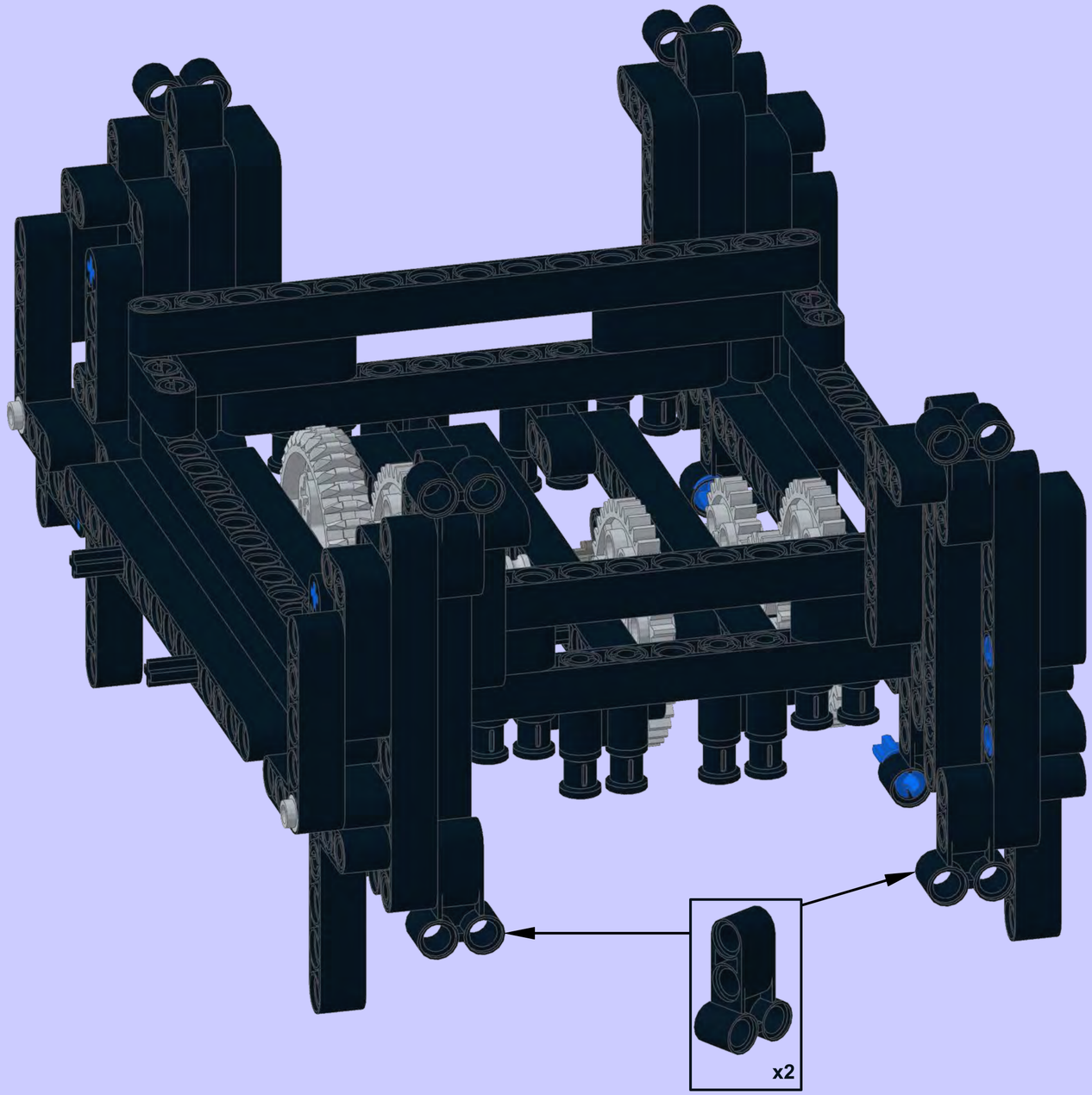

21 2x

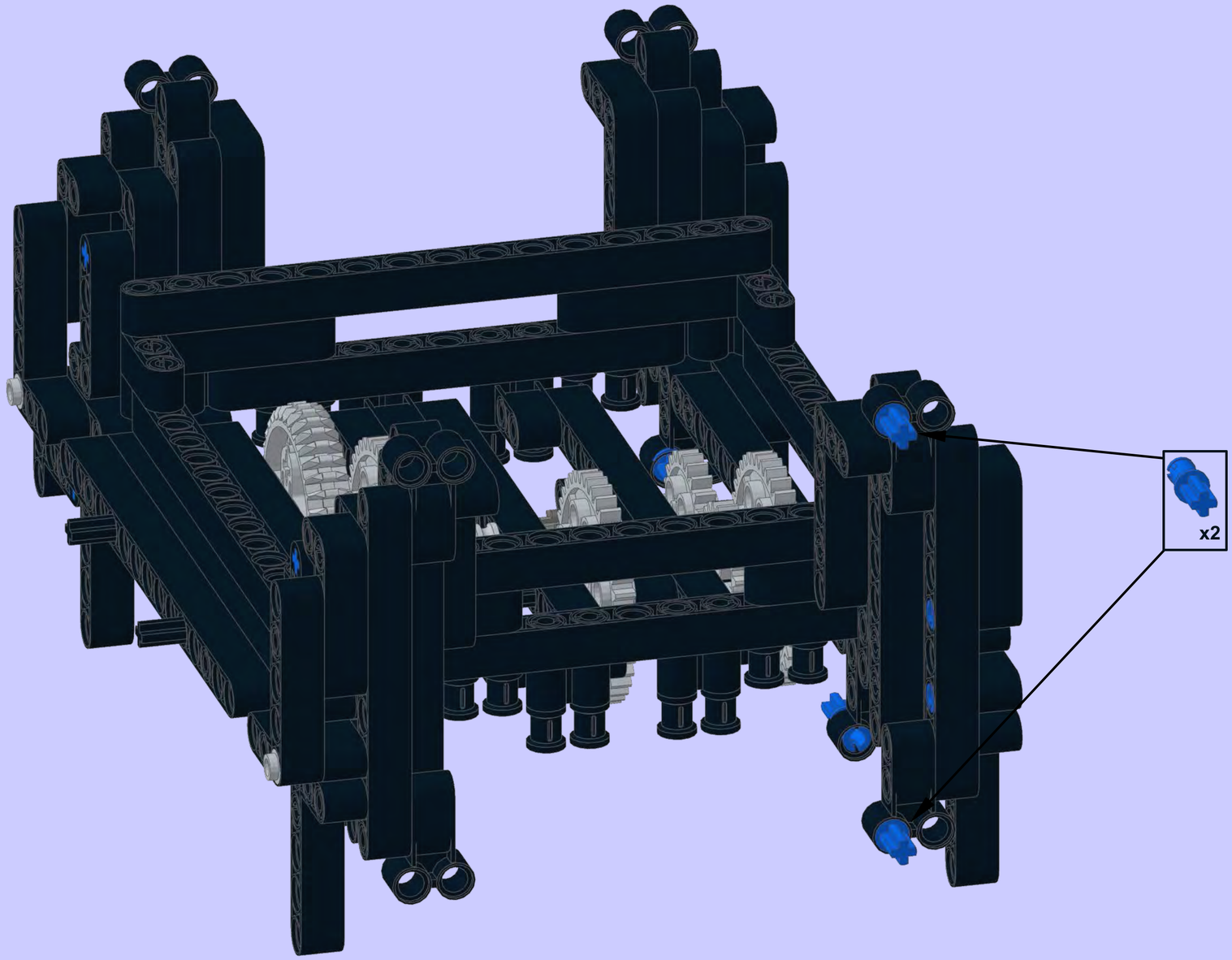

22

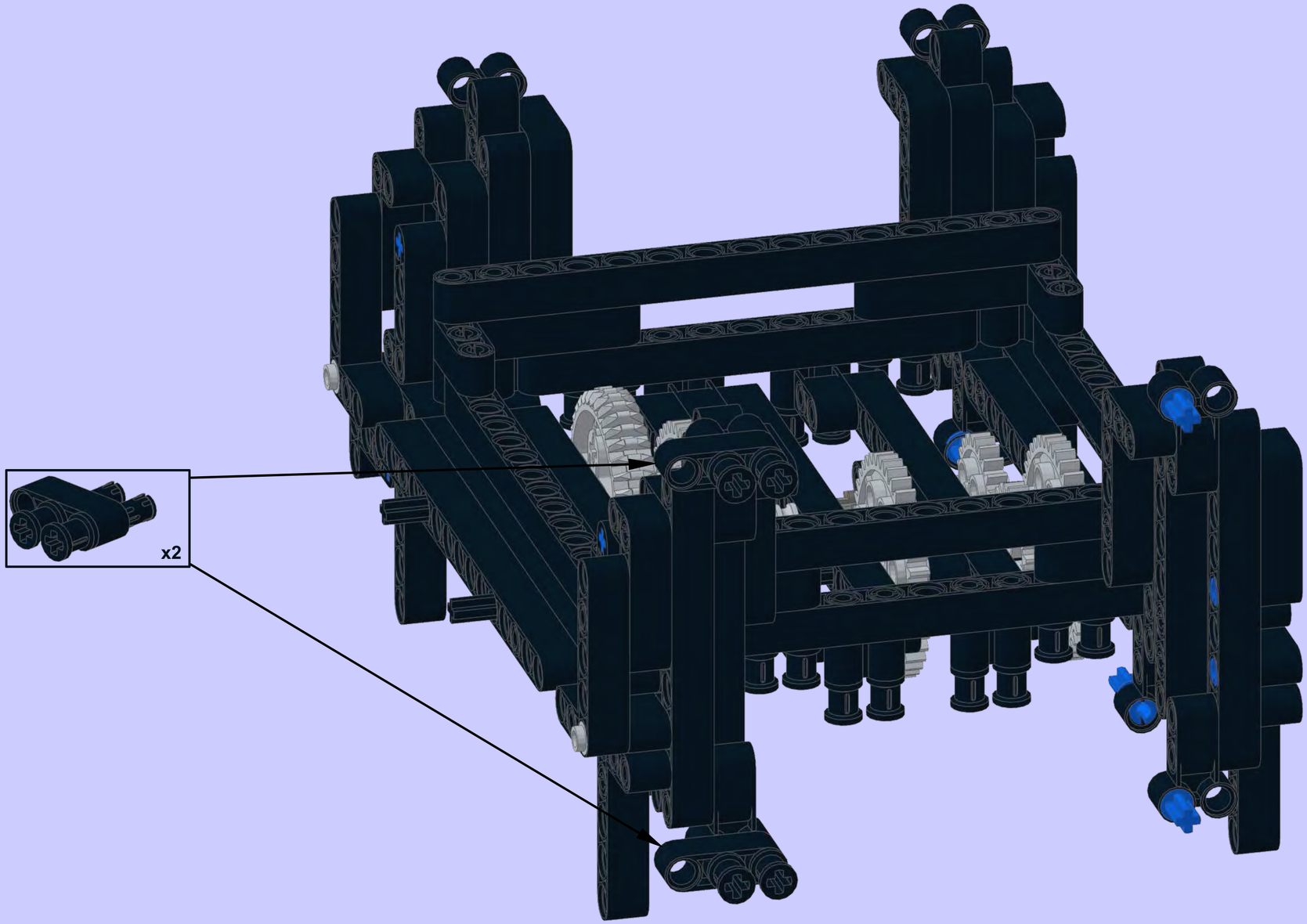

23

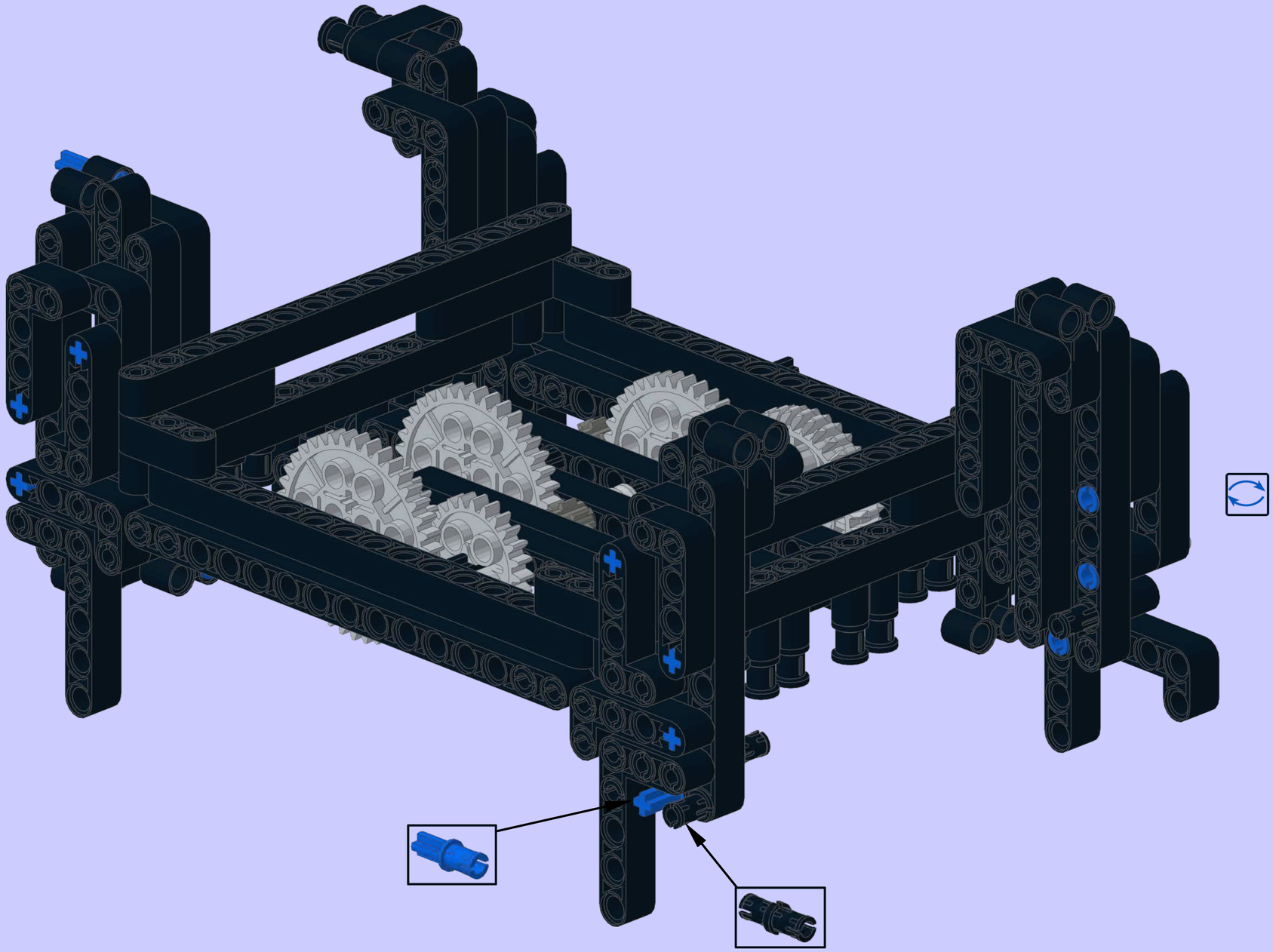

**24**

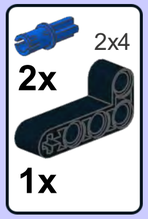


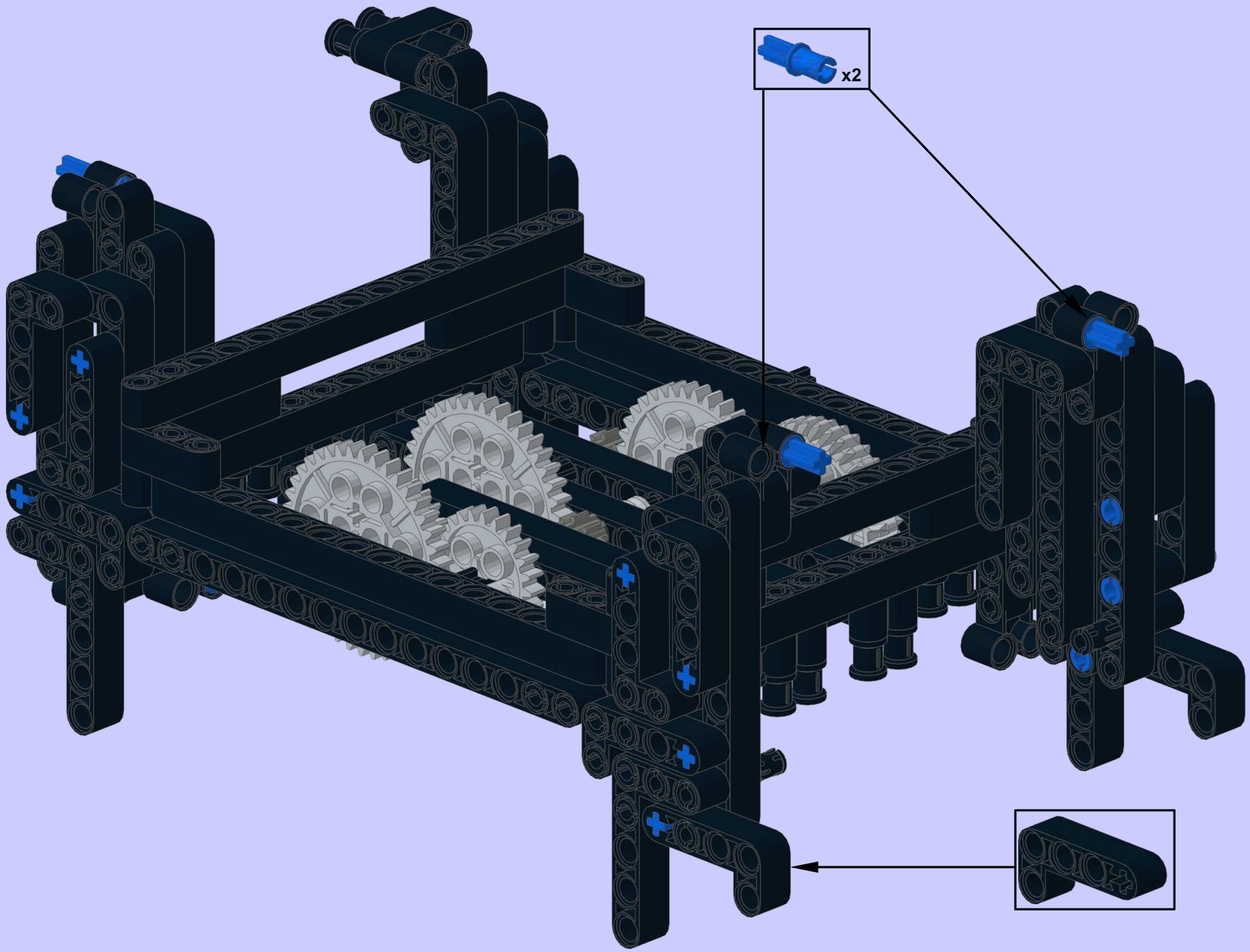

# Right Bottom Front (RBF) calculator - multiplies input from above (years) by 2 and sends output below

**1**

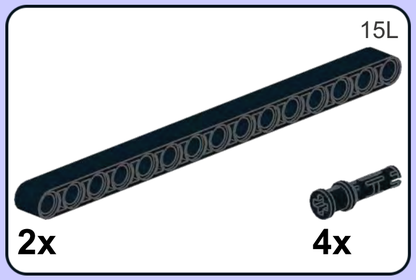


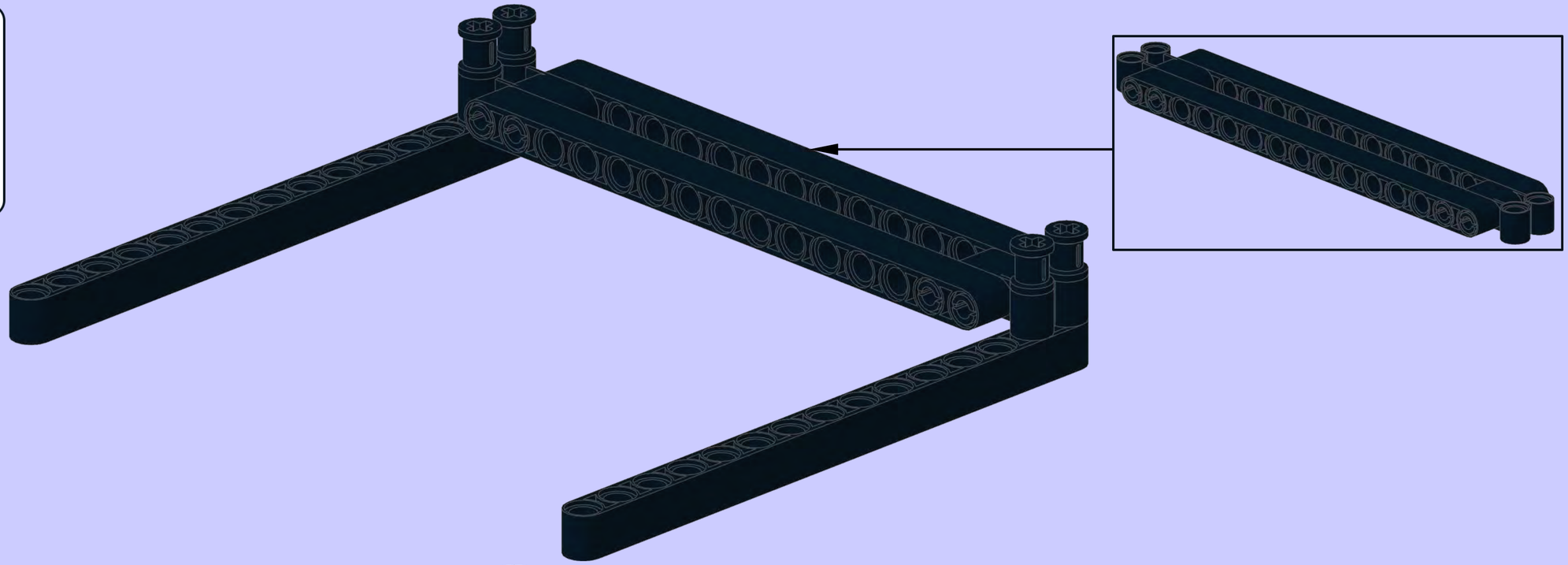

**2**

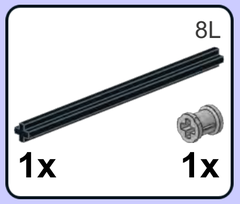


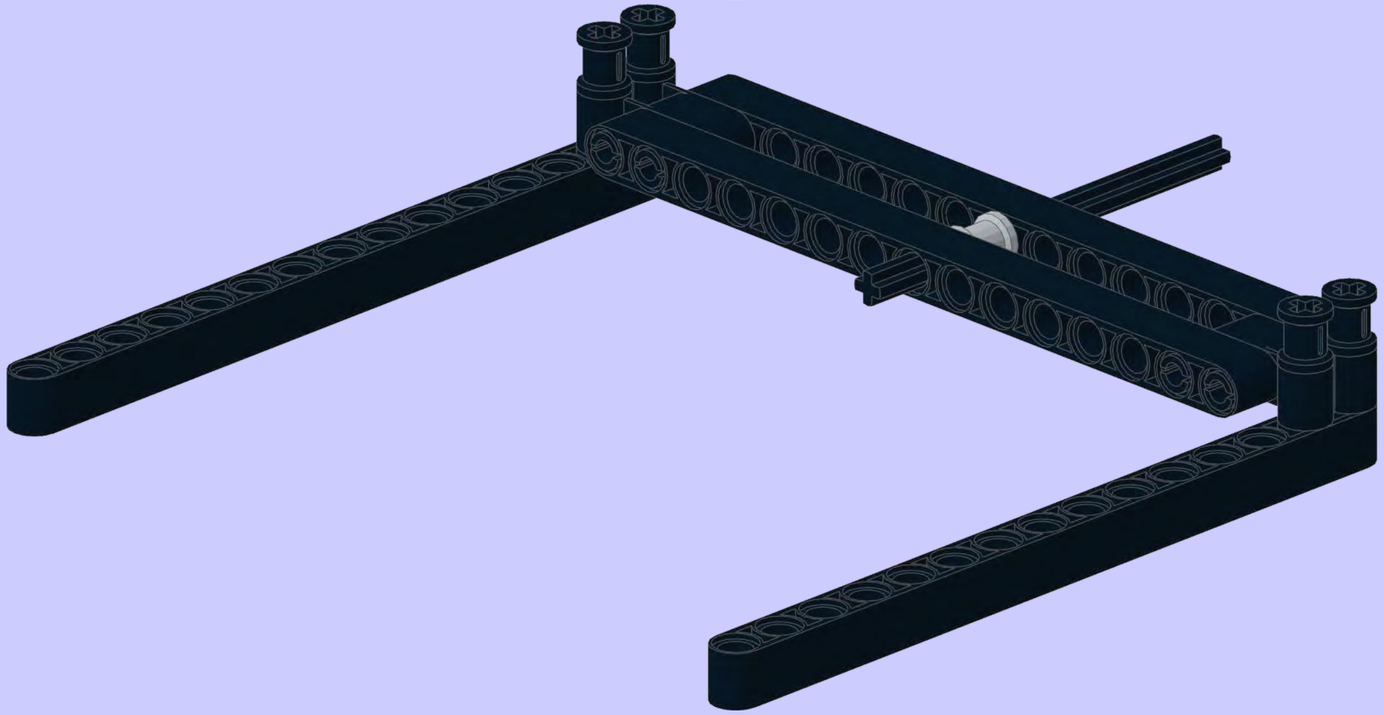

3

40T

2x

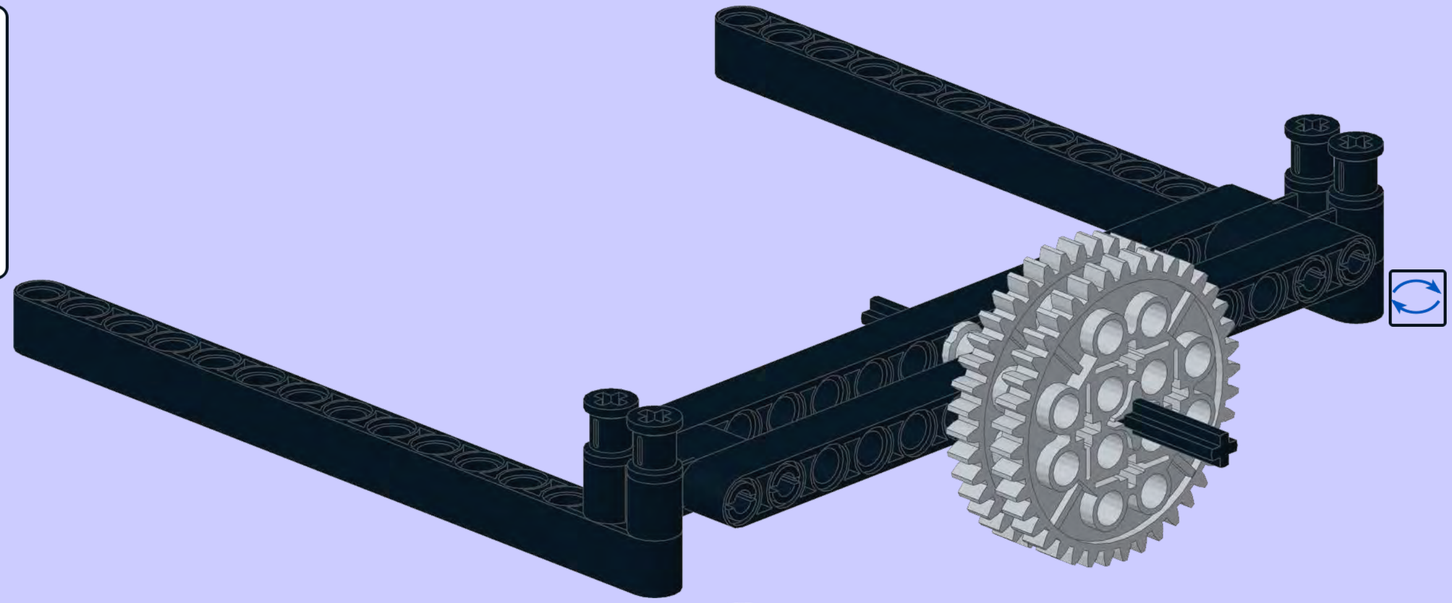

4

3x

2x

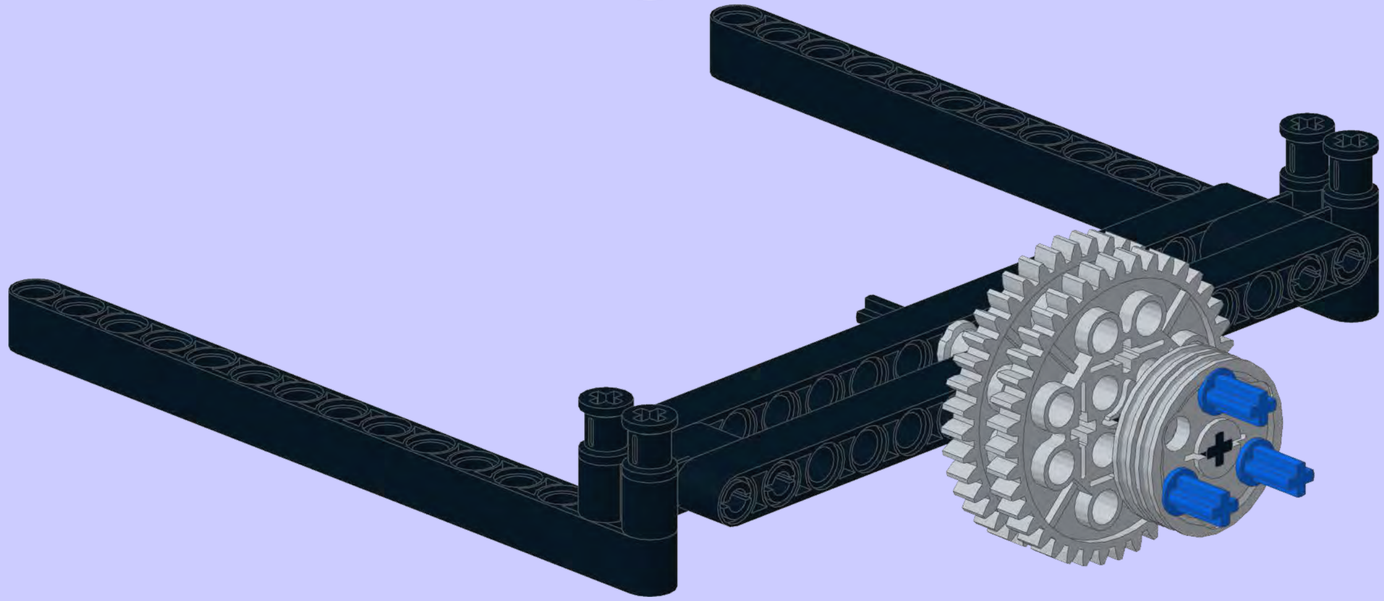

**5**

4x

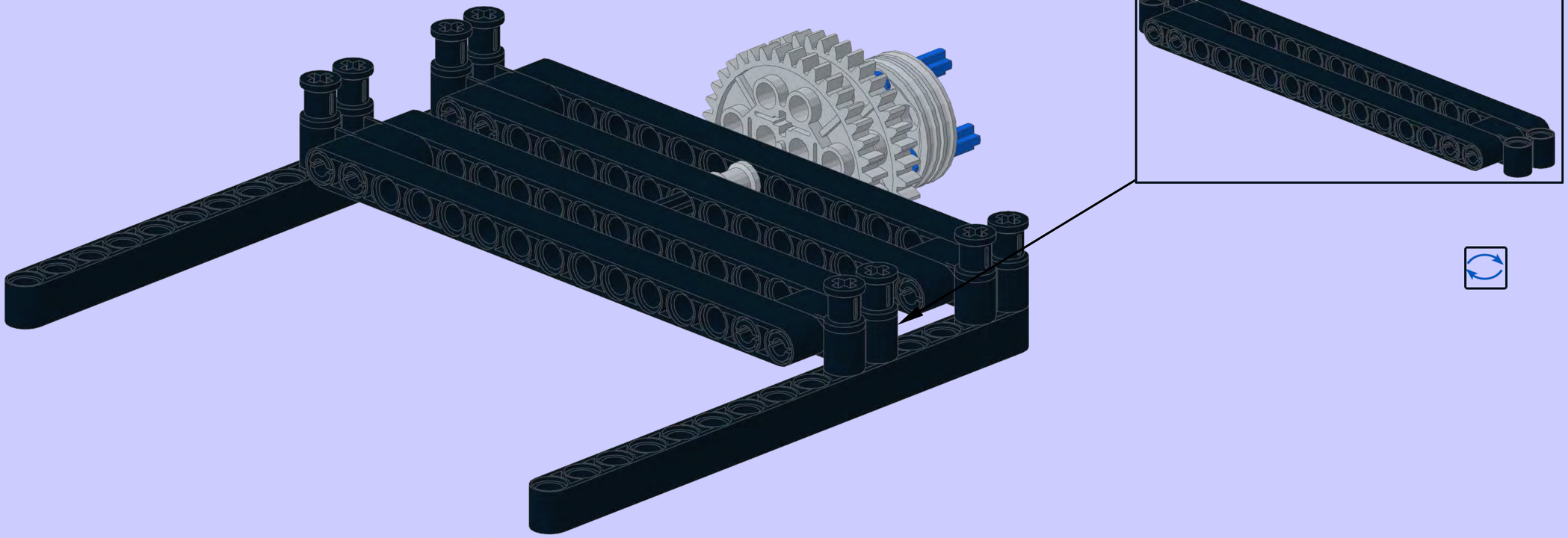

**6**

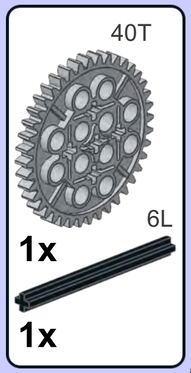


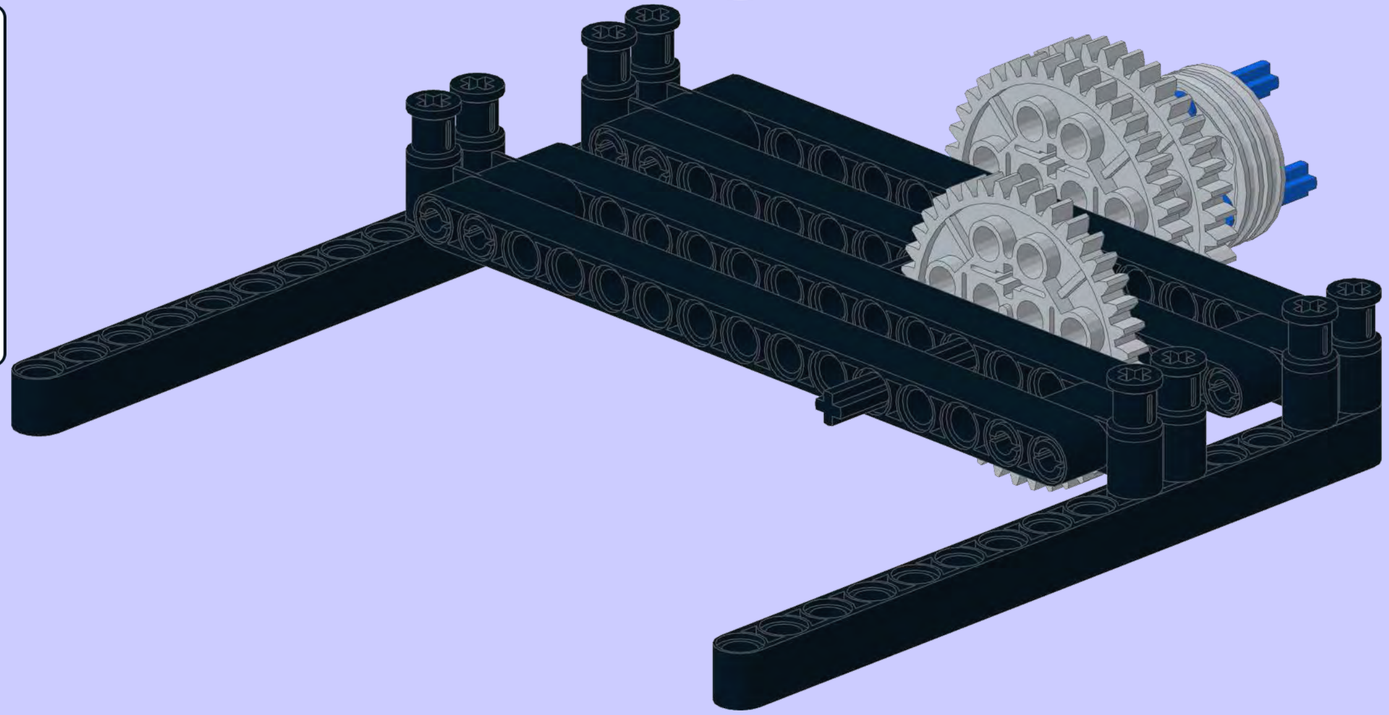

**7**

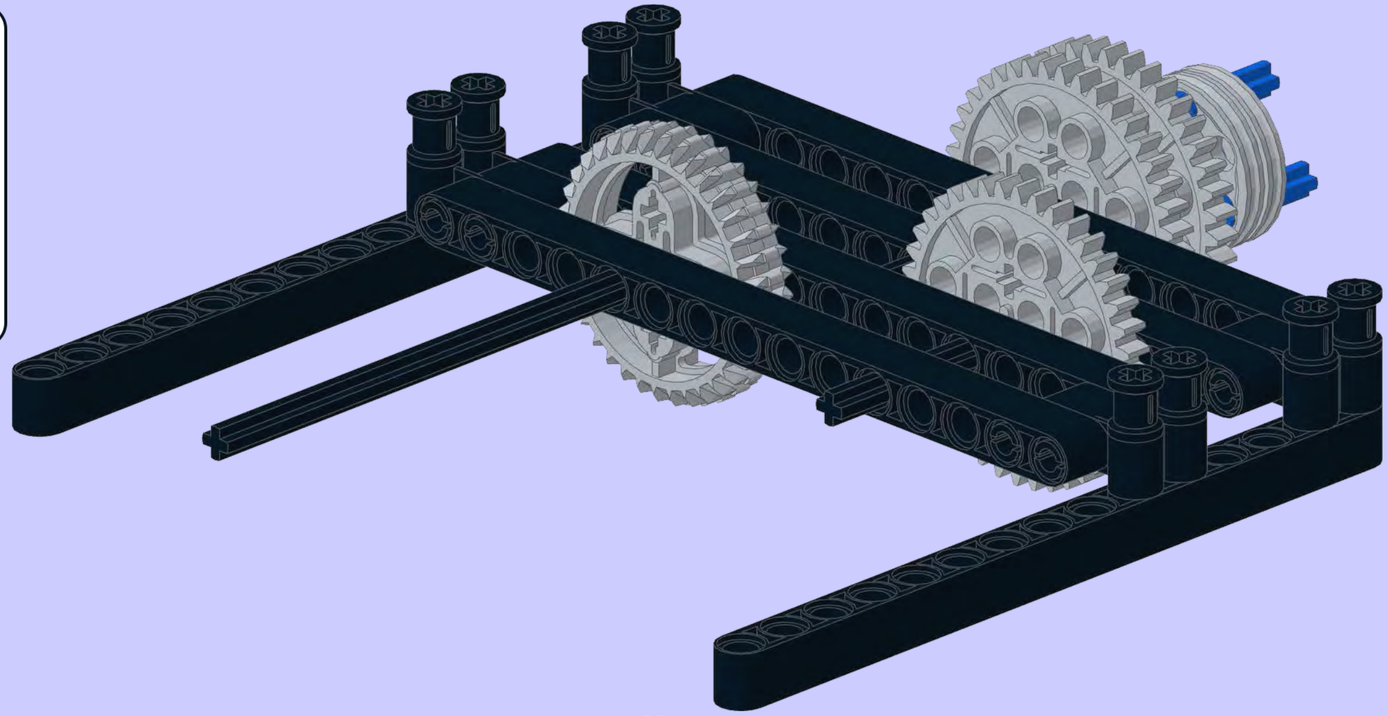

**8**

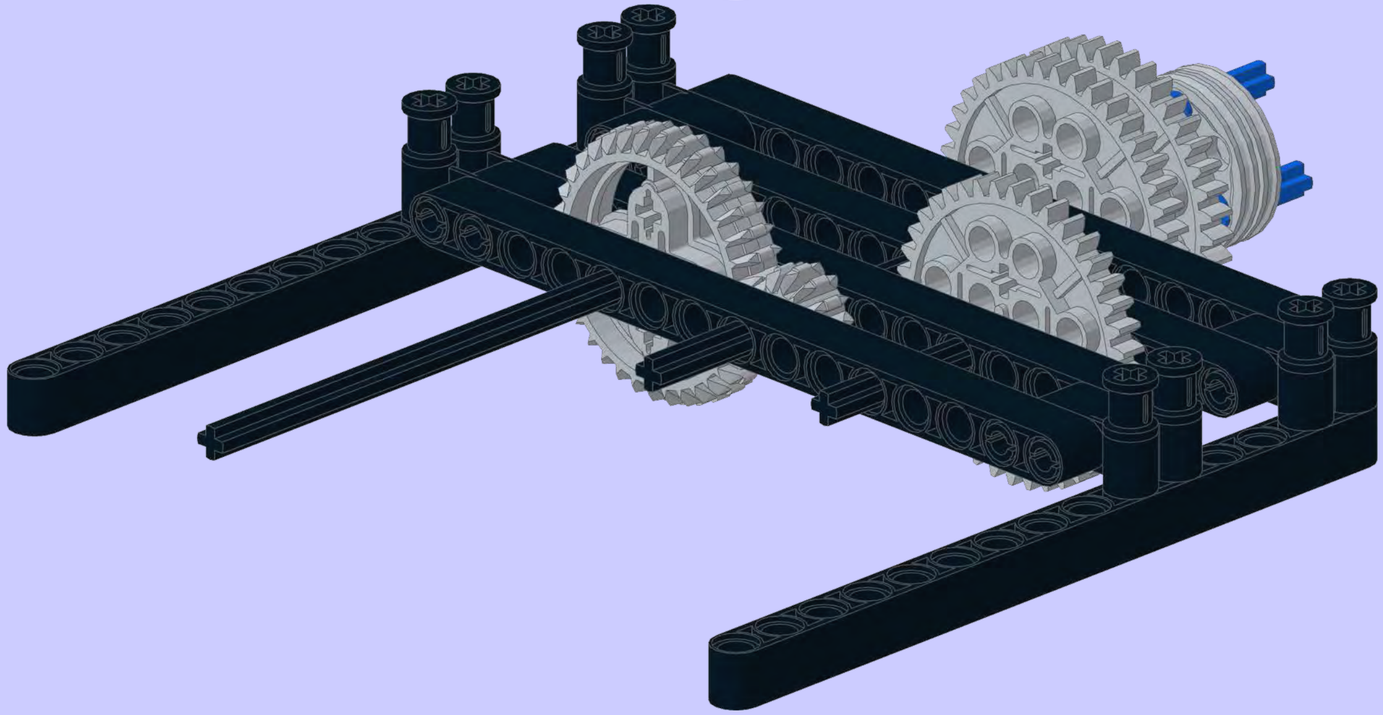

**9**

12T

**2x**

24T

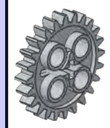

**1x**

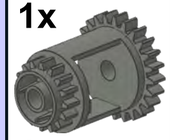

**1x**

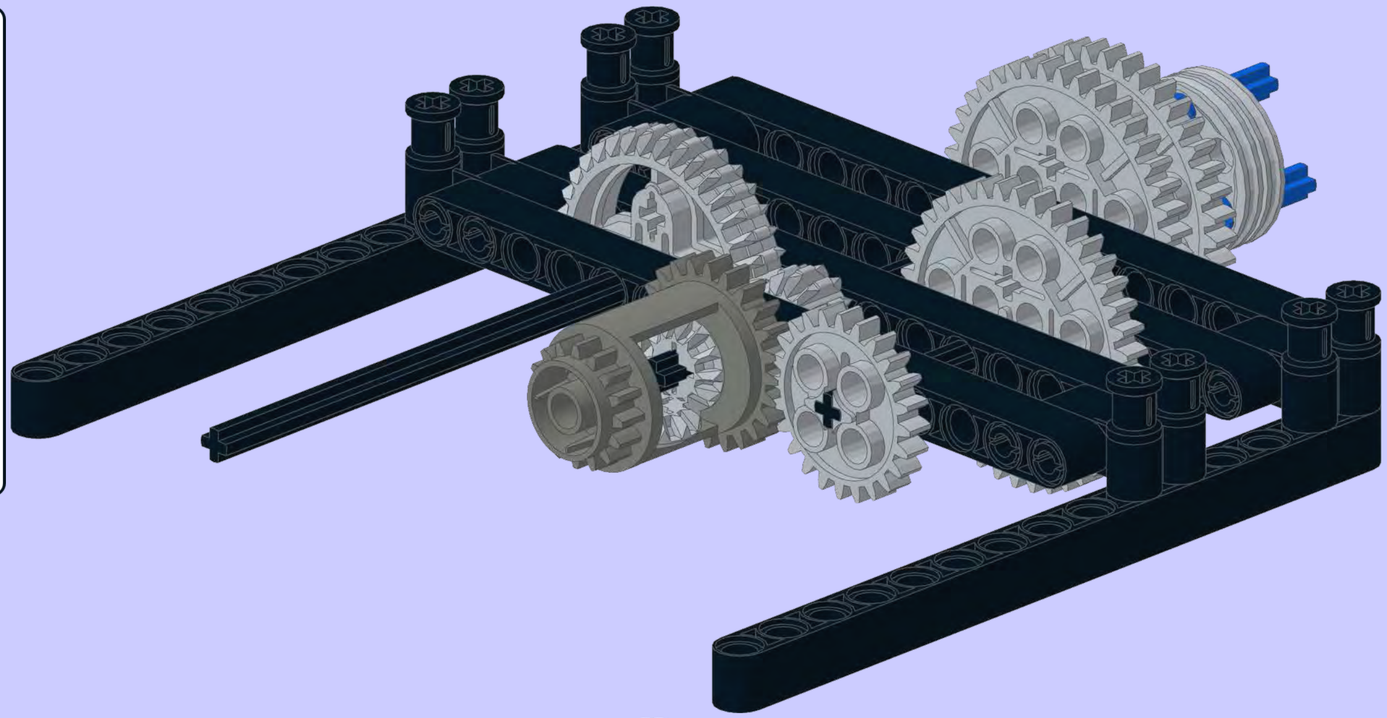

**10**

**4x**

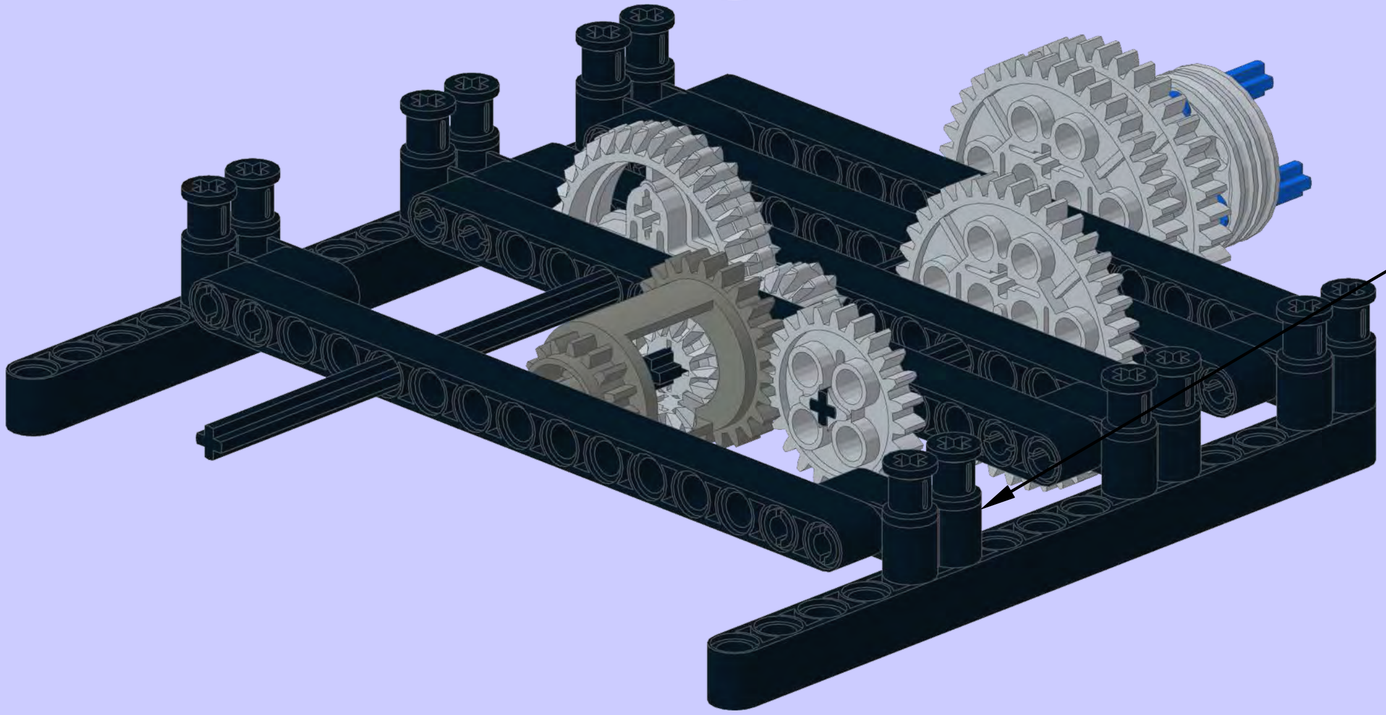

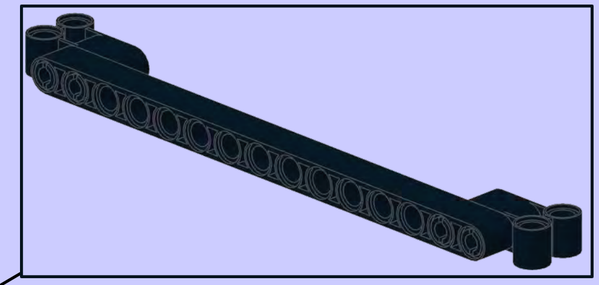

**11**

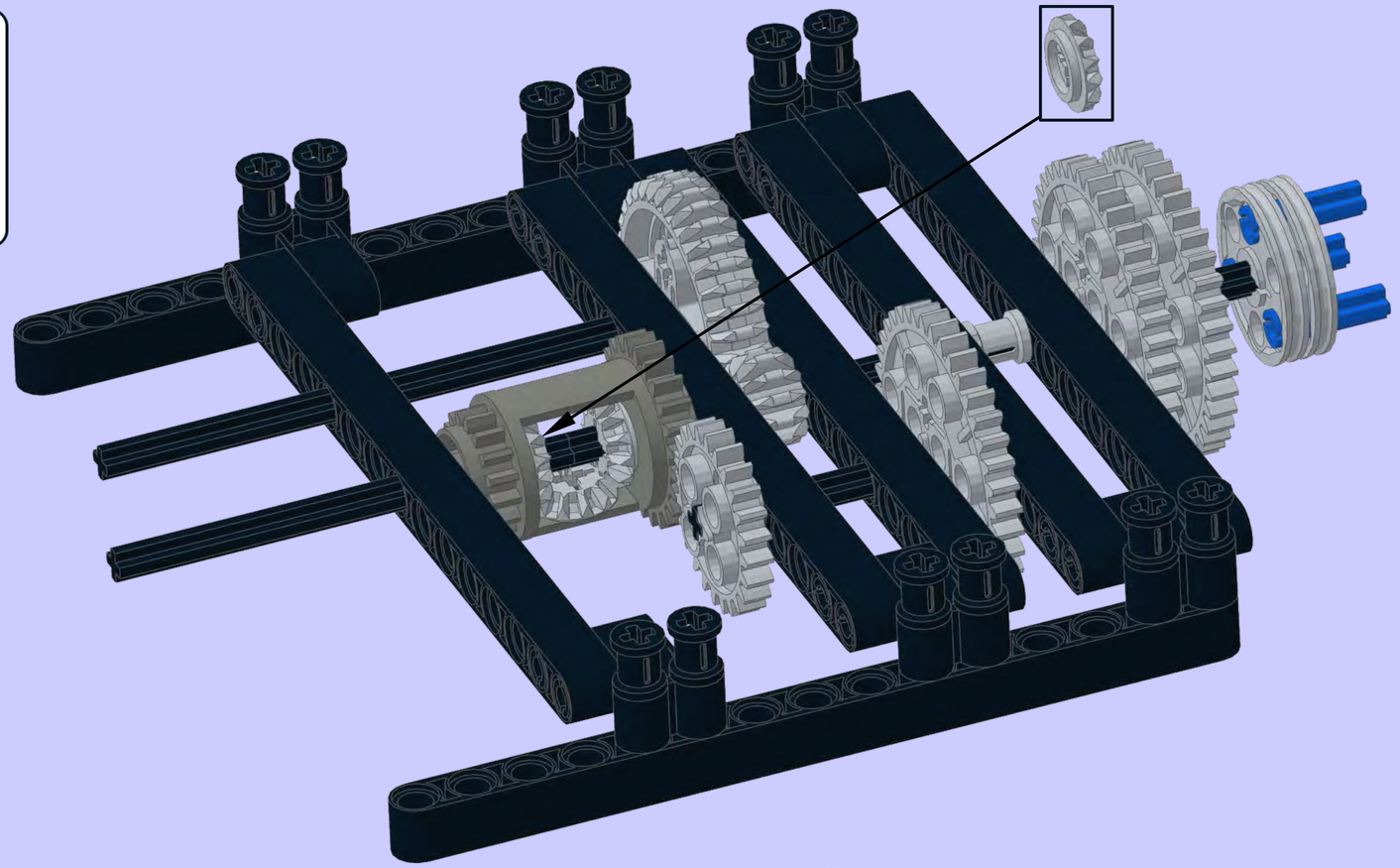

**12**

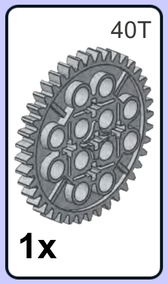


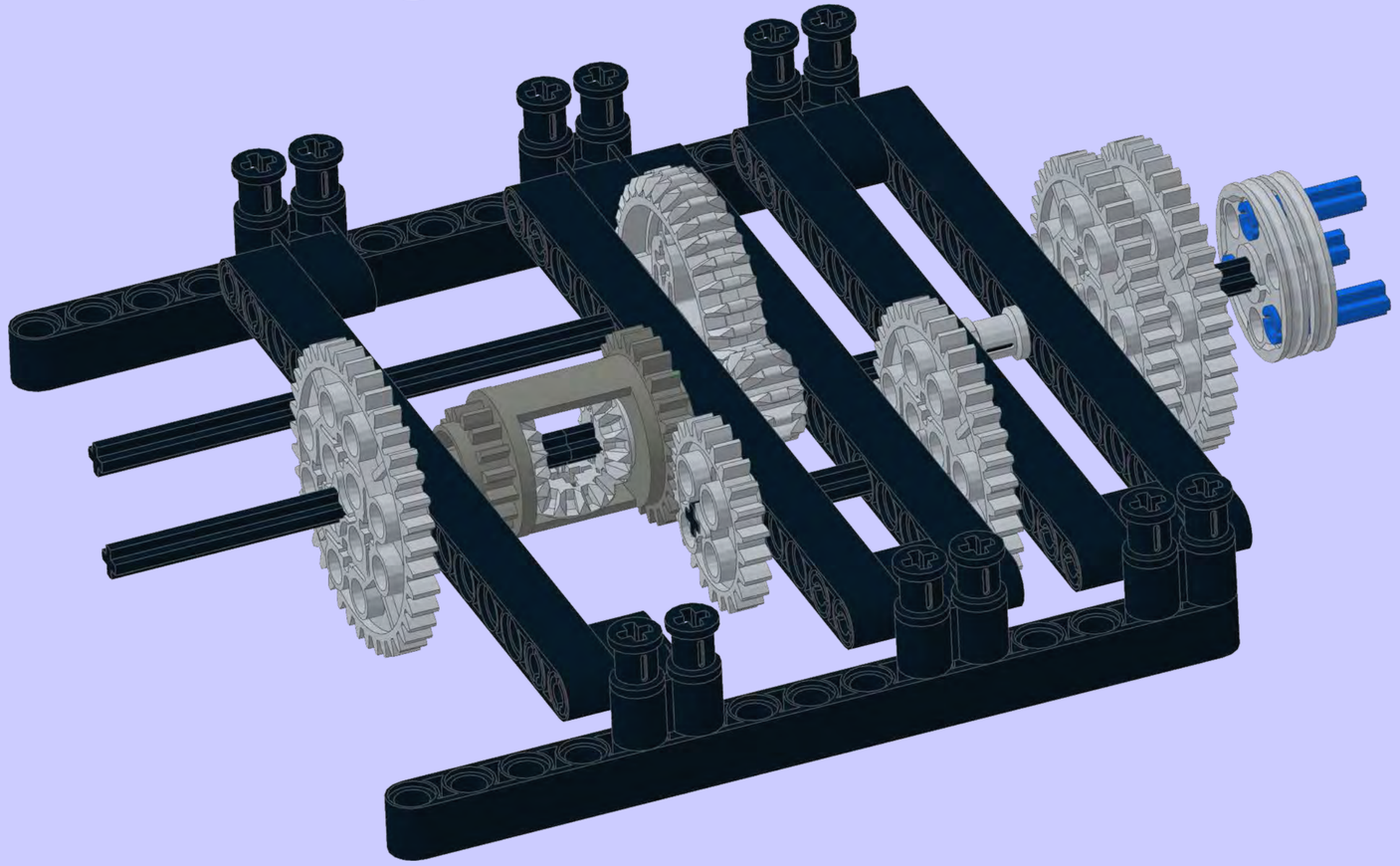

13

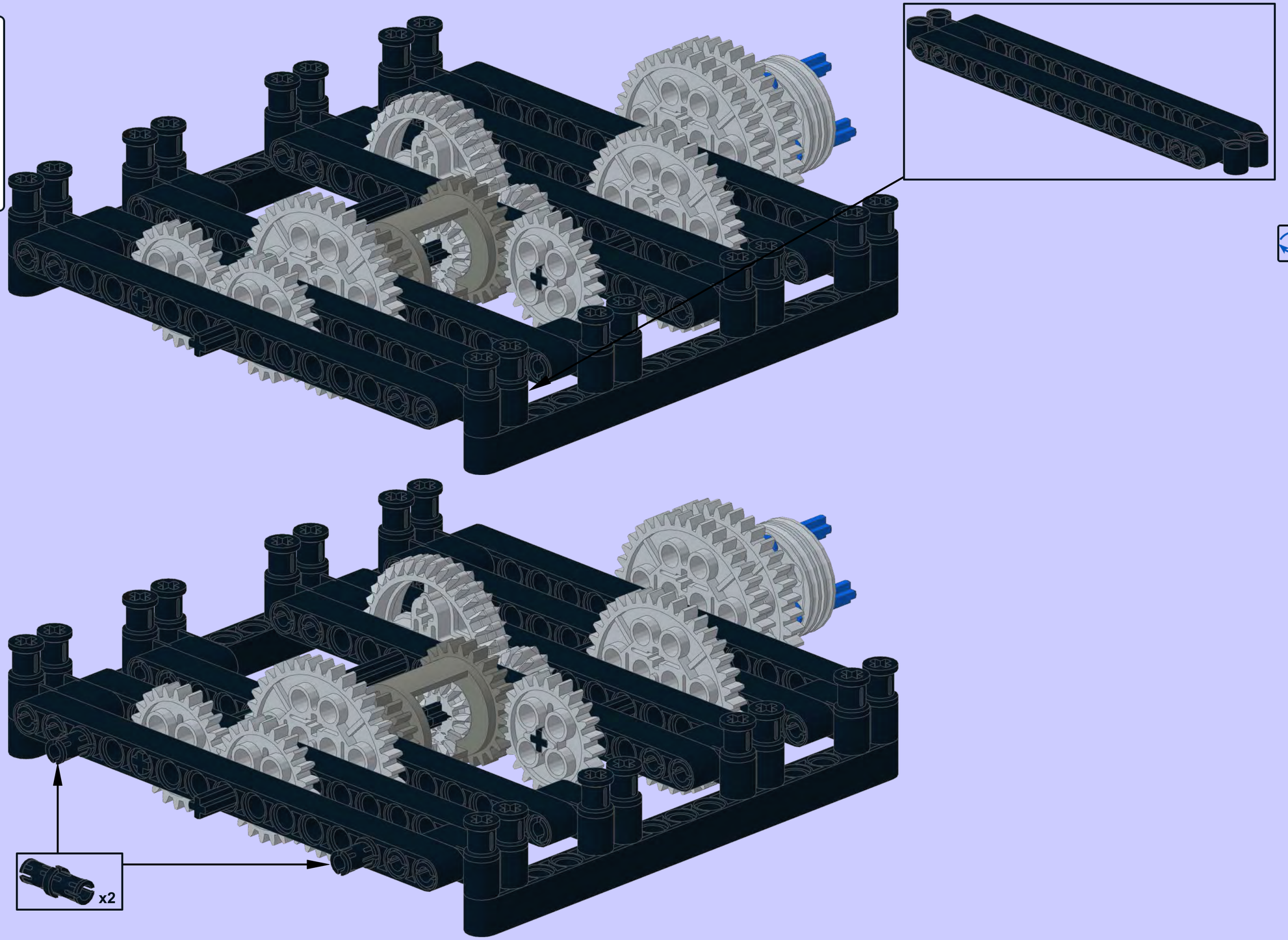

14

**15**

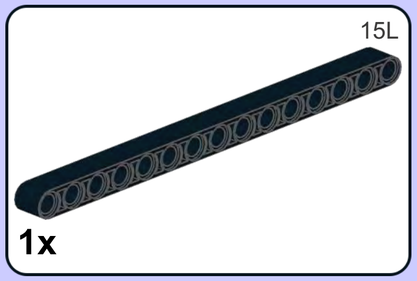


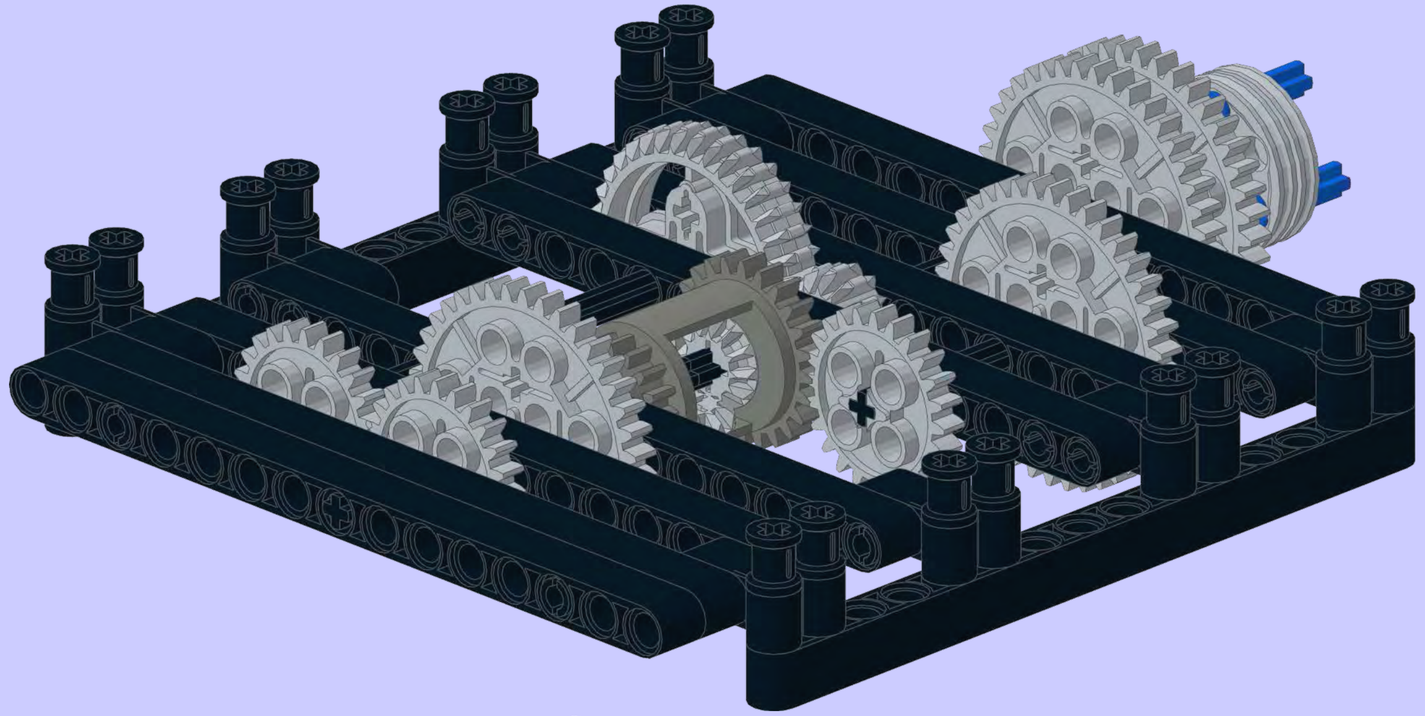

**16**

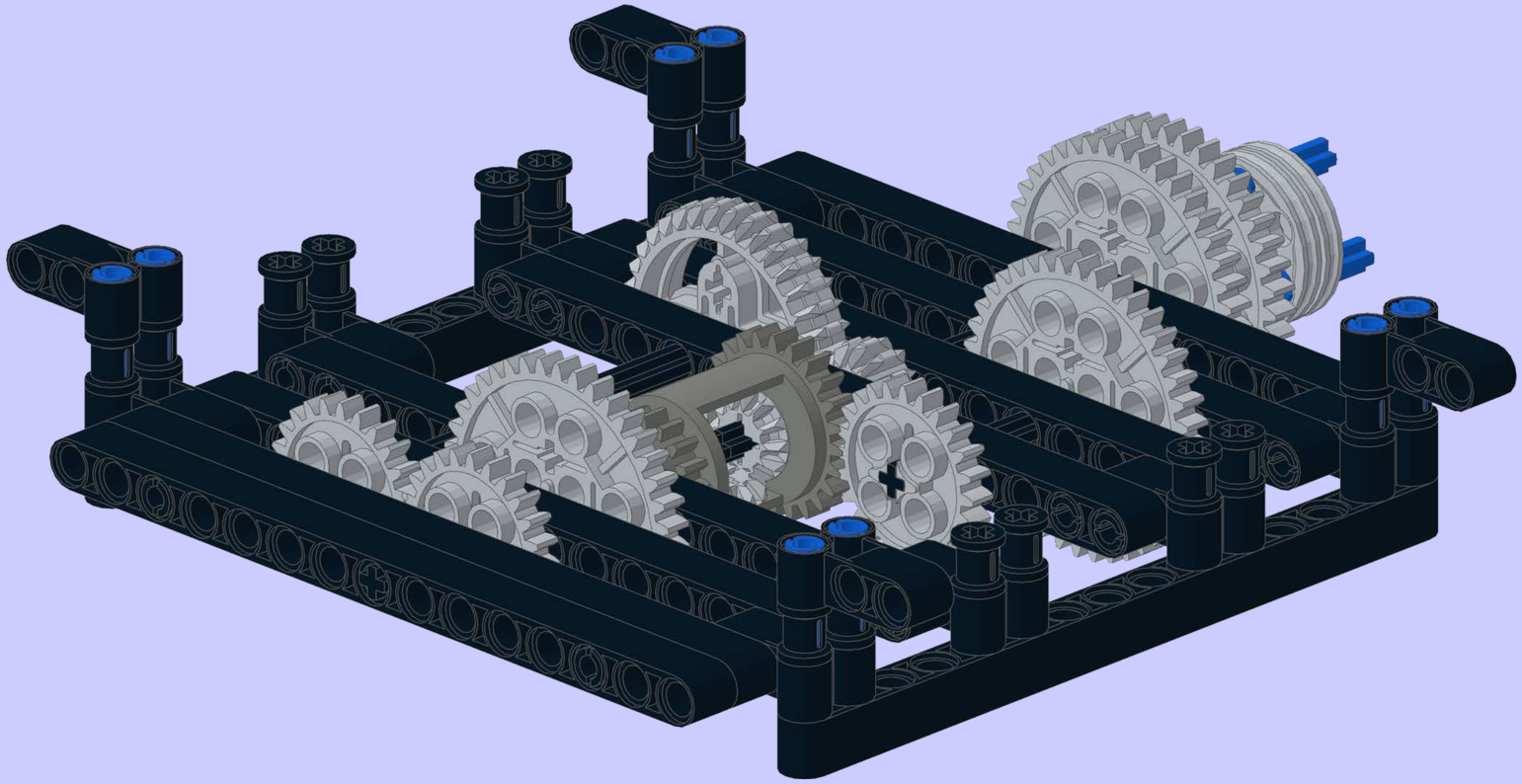

25

4x

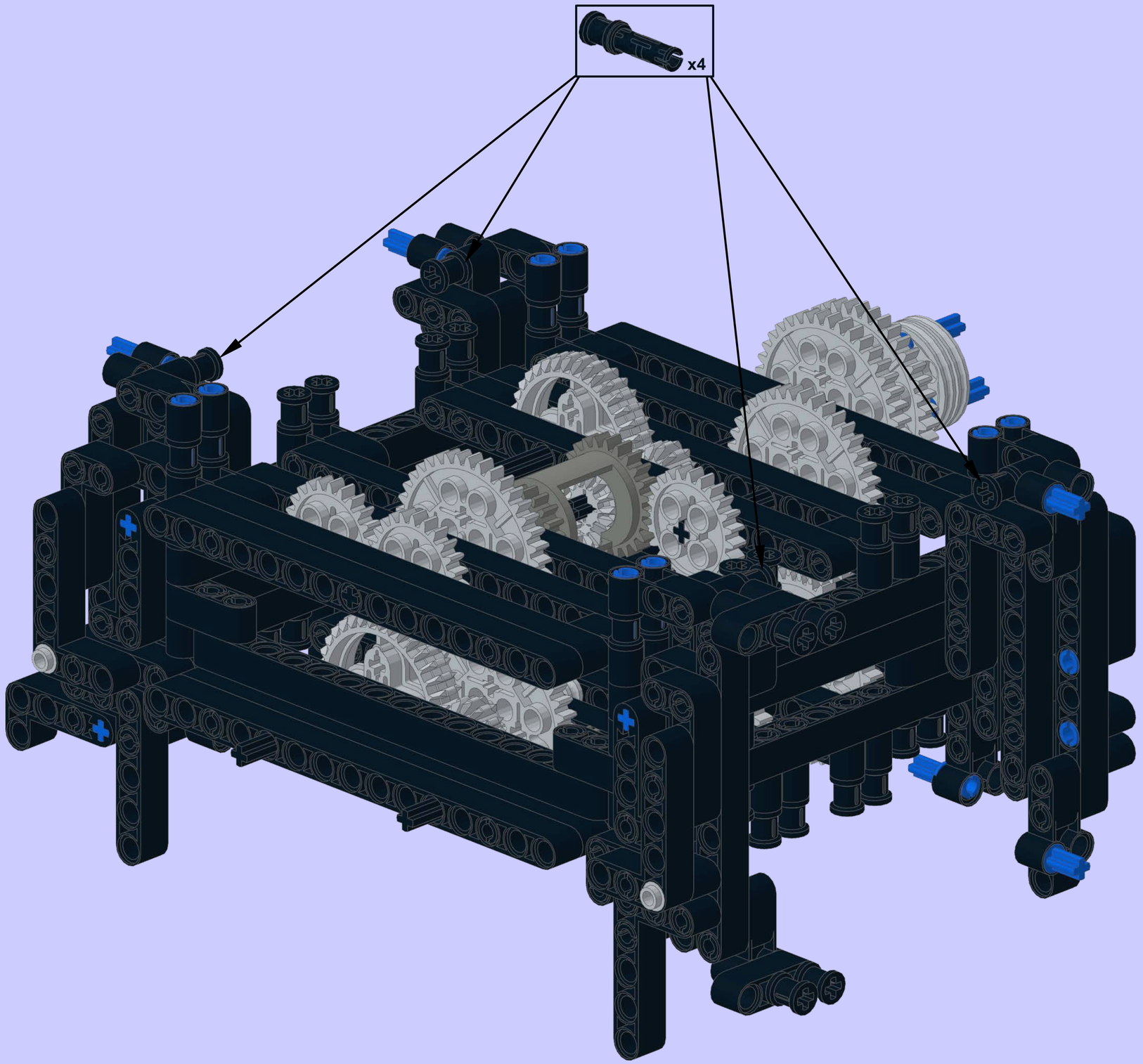

26

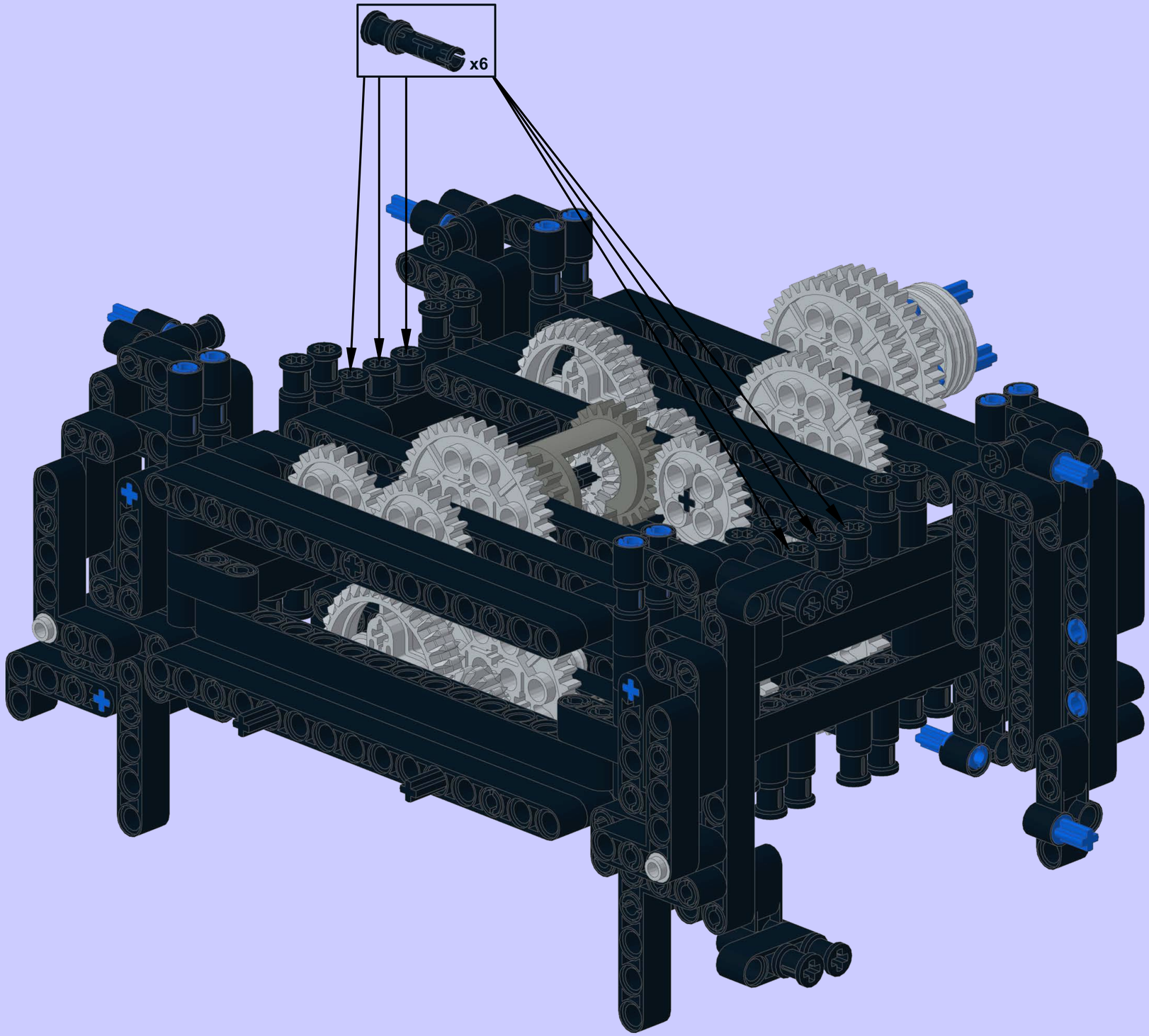

1 4x

## Right Top Front Bottom (RTF) rack - using extended base

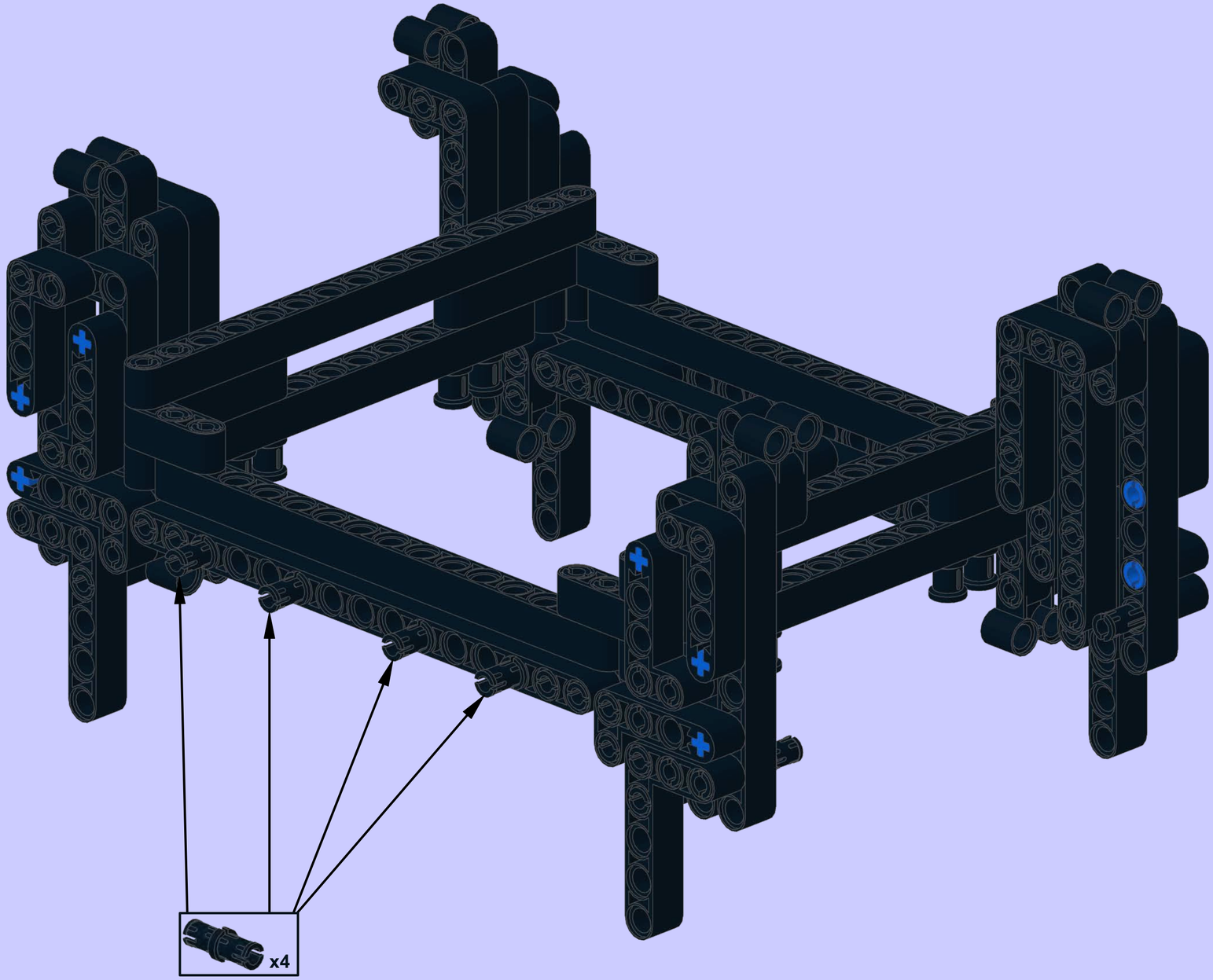

**2**

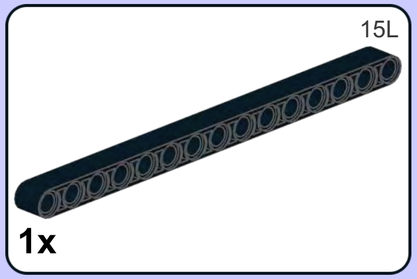


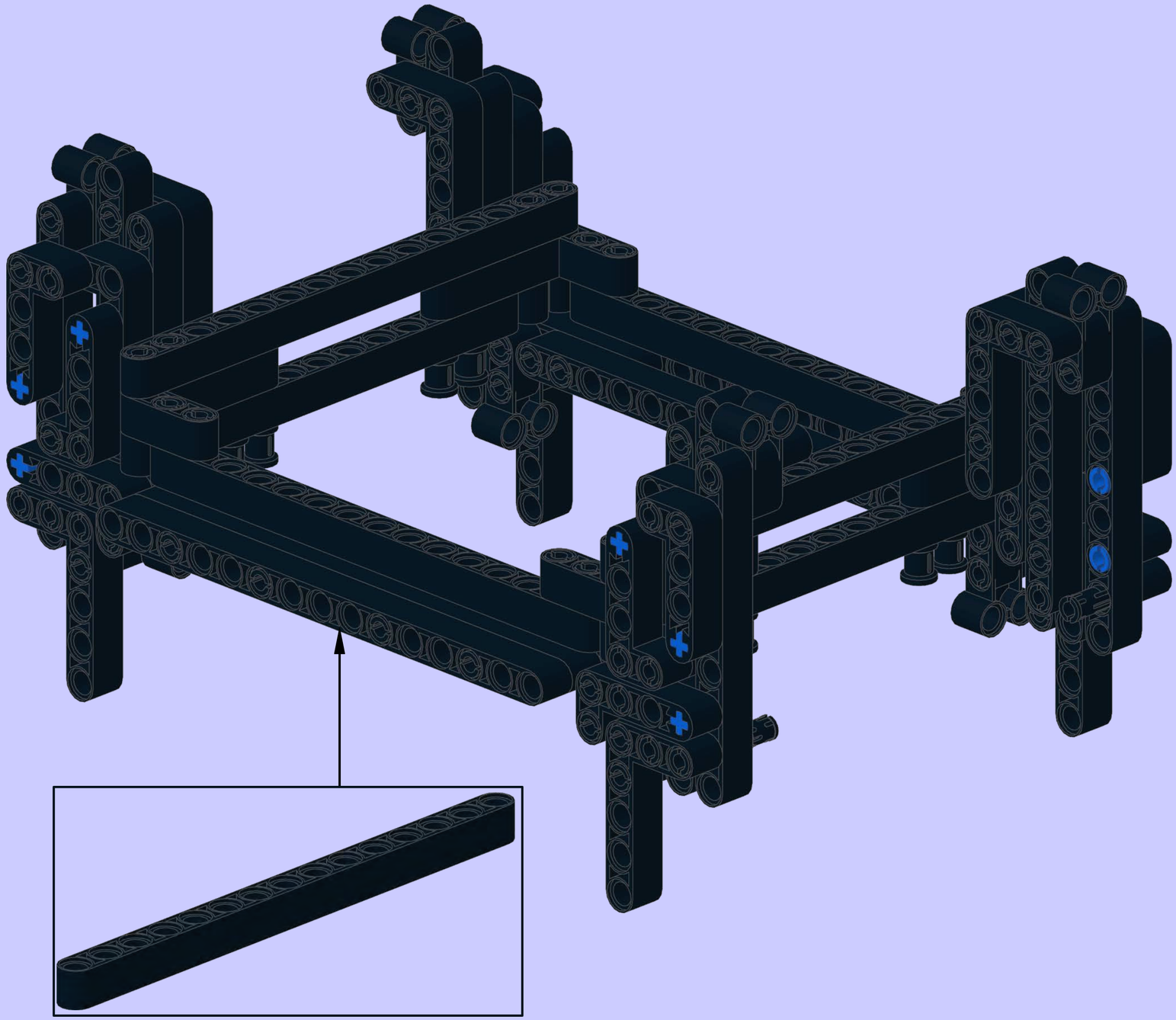

3


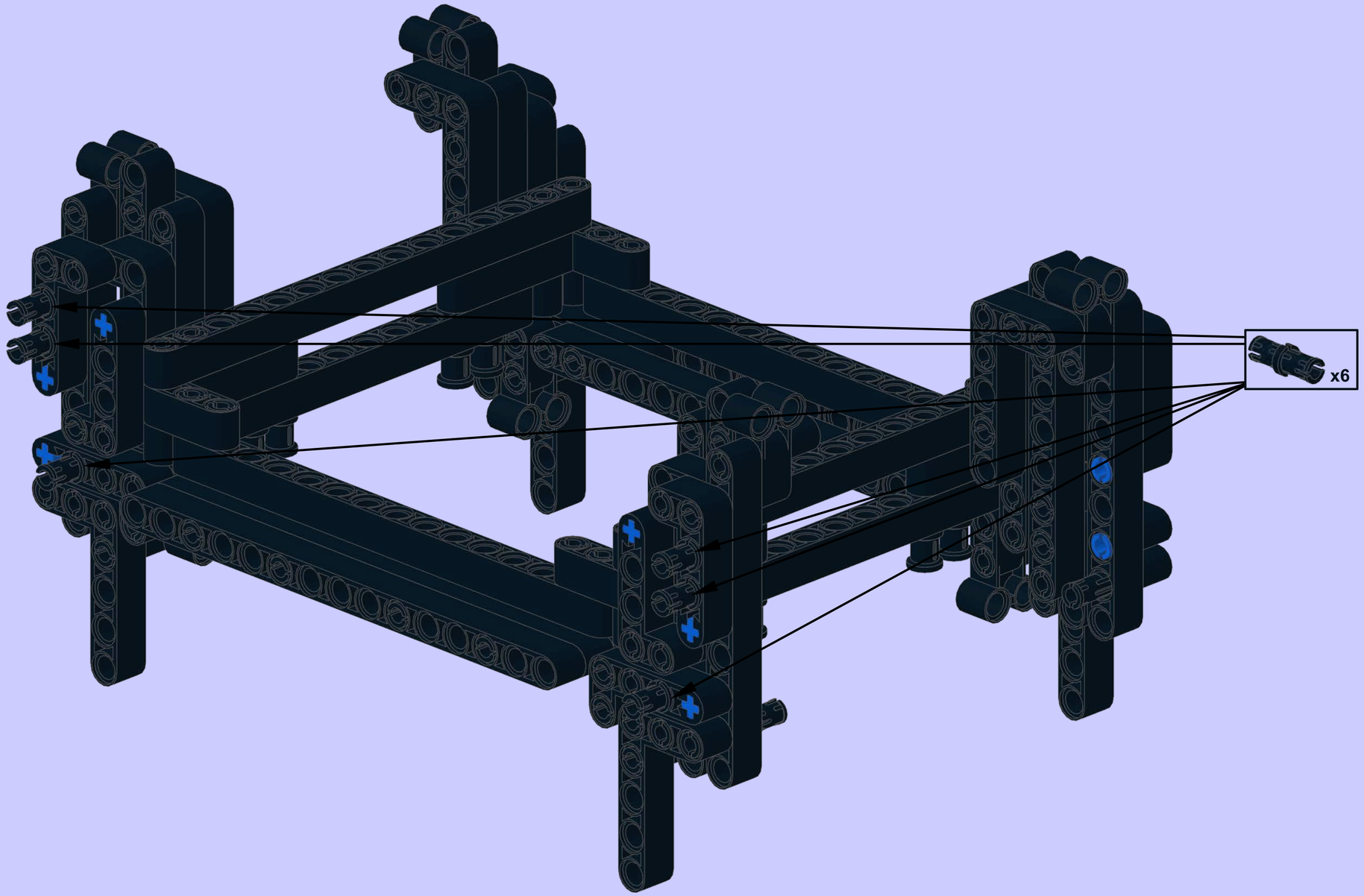

**4**

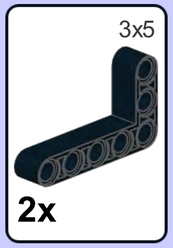


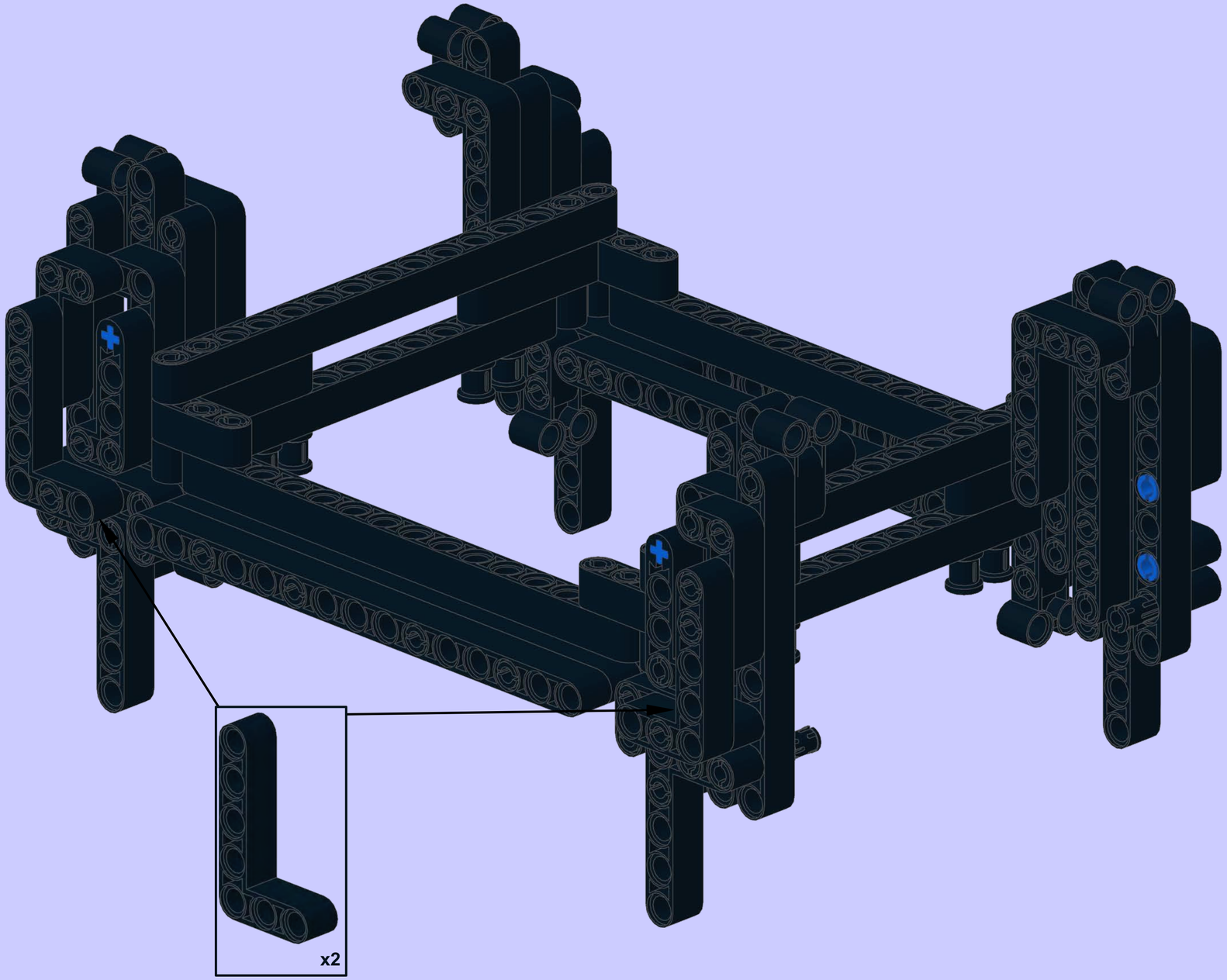

5

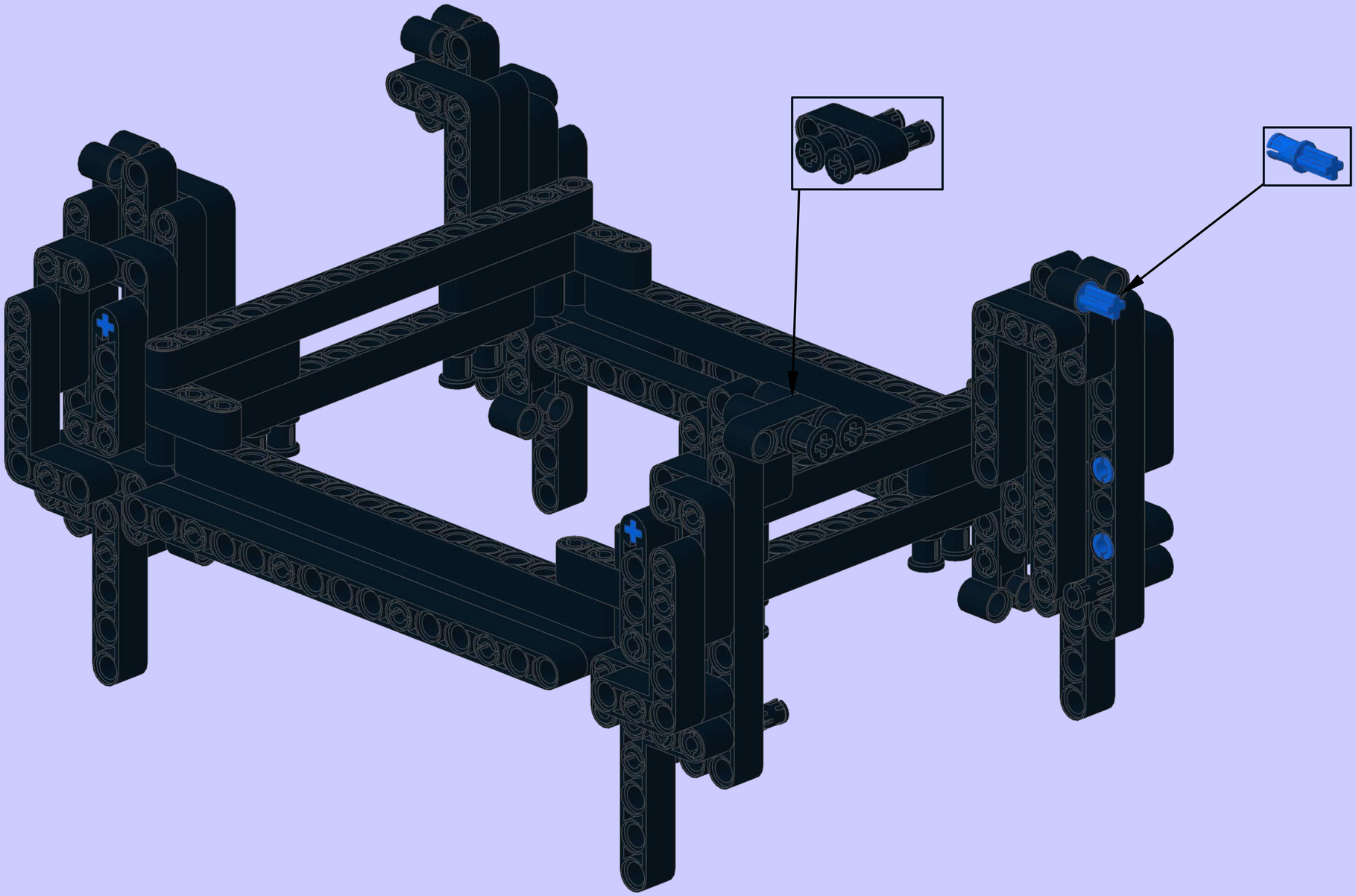

6

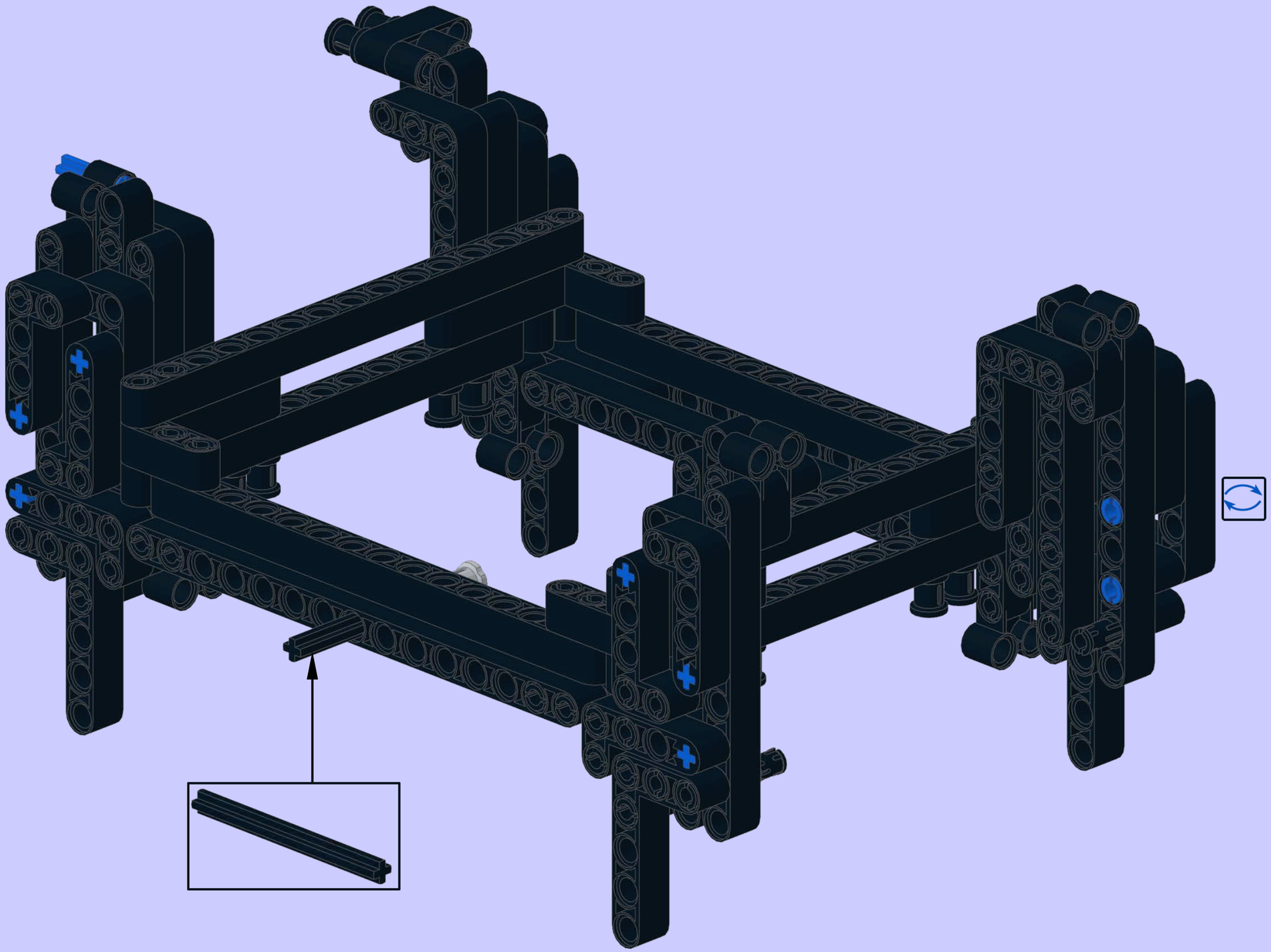

7

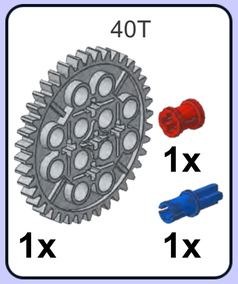


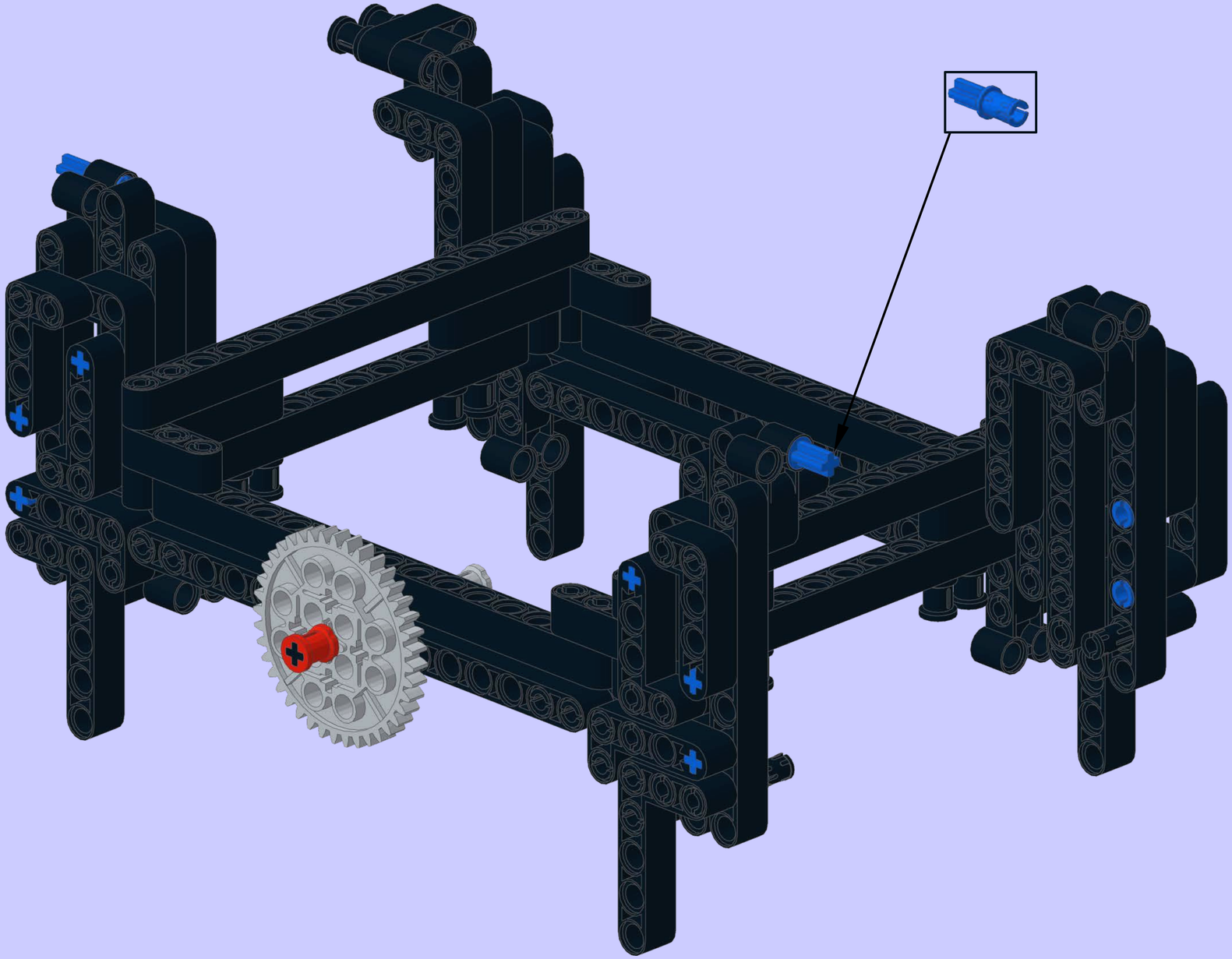

8

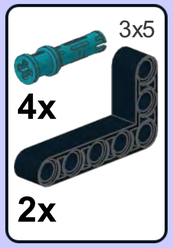


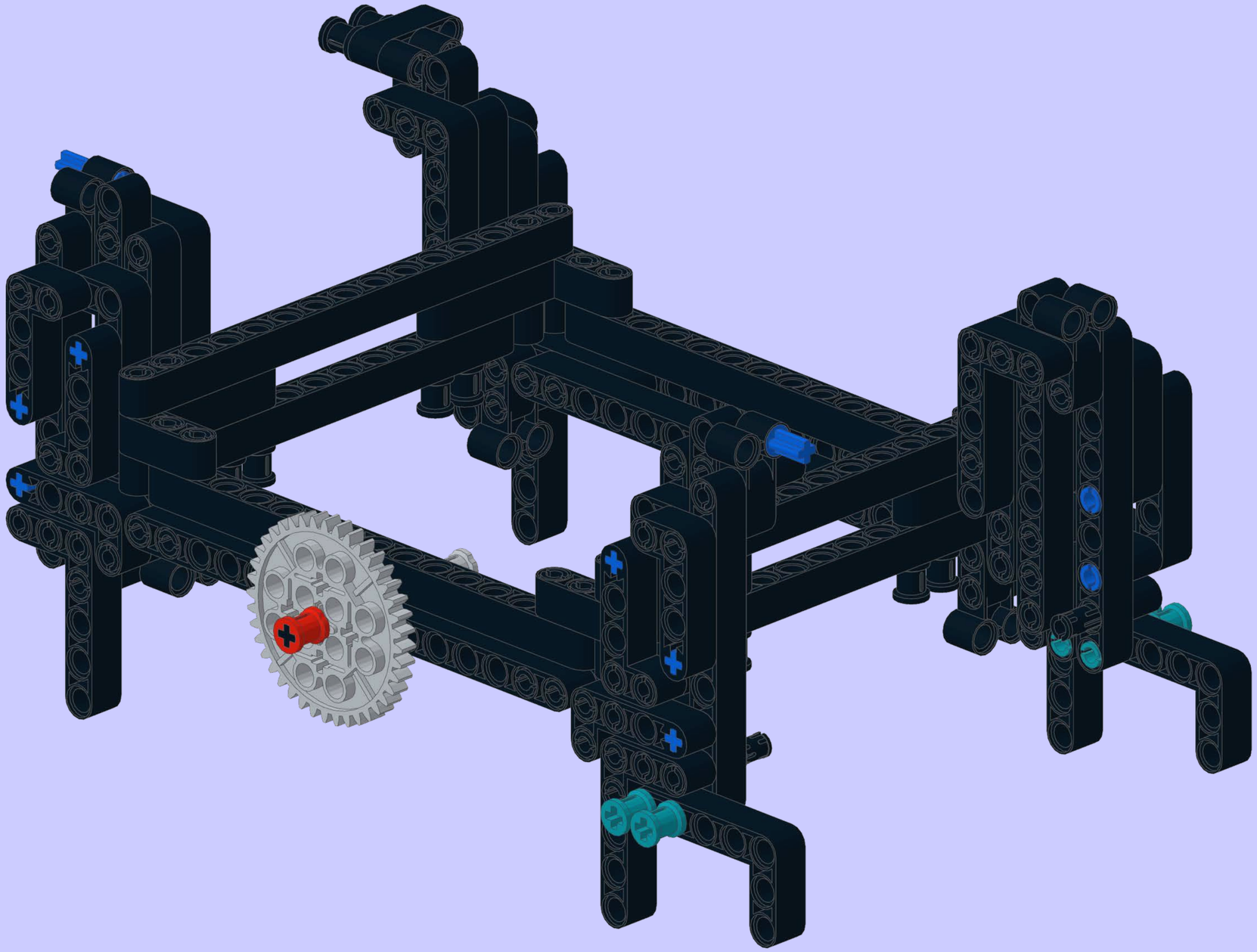

9

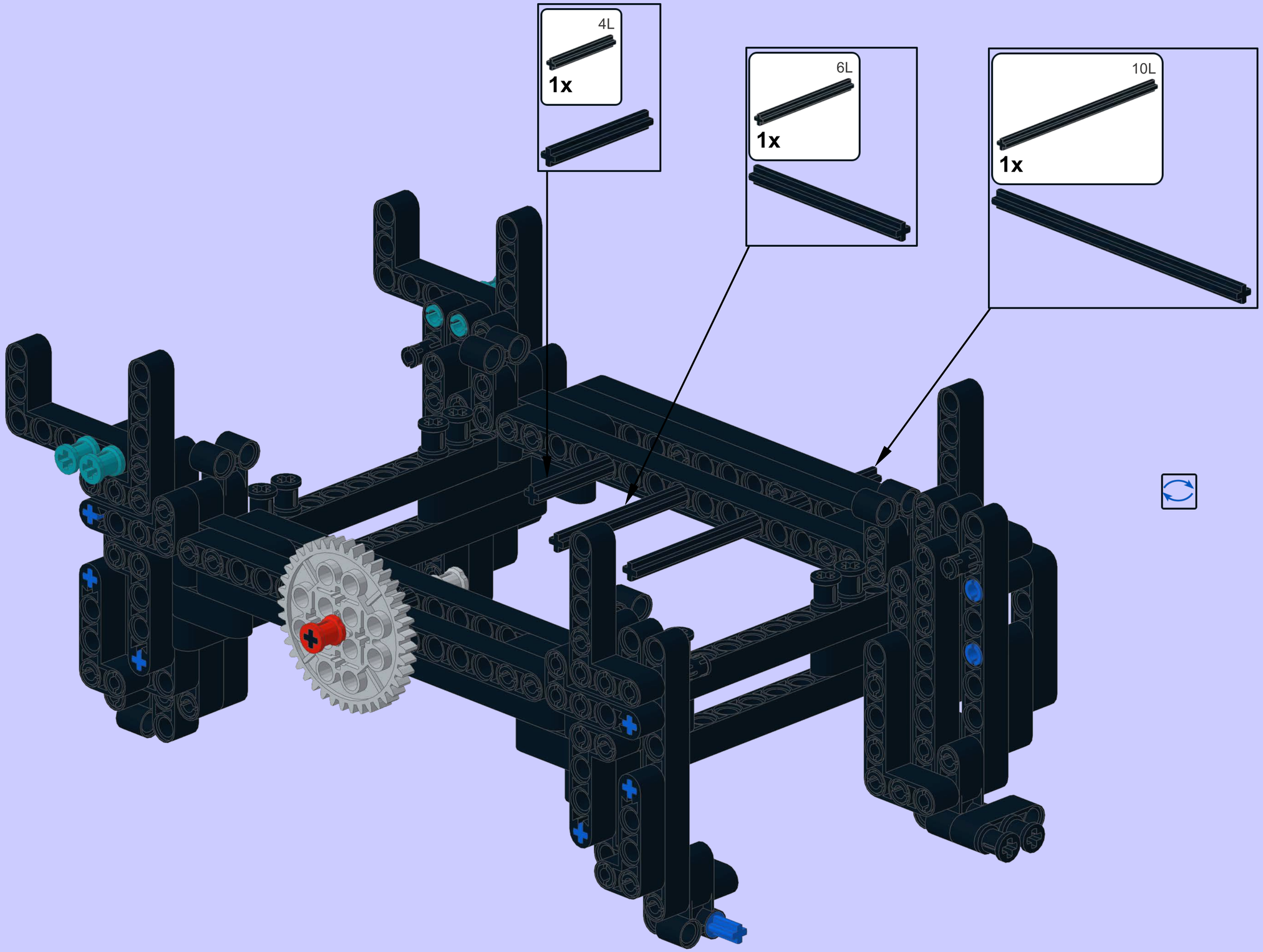

**10**

8T

**1x**

40T

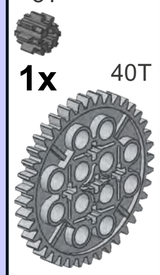

**1x**

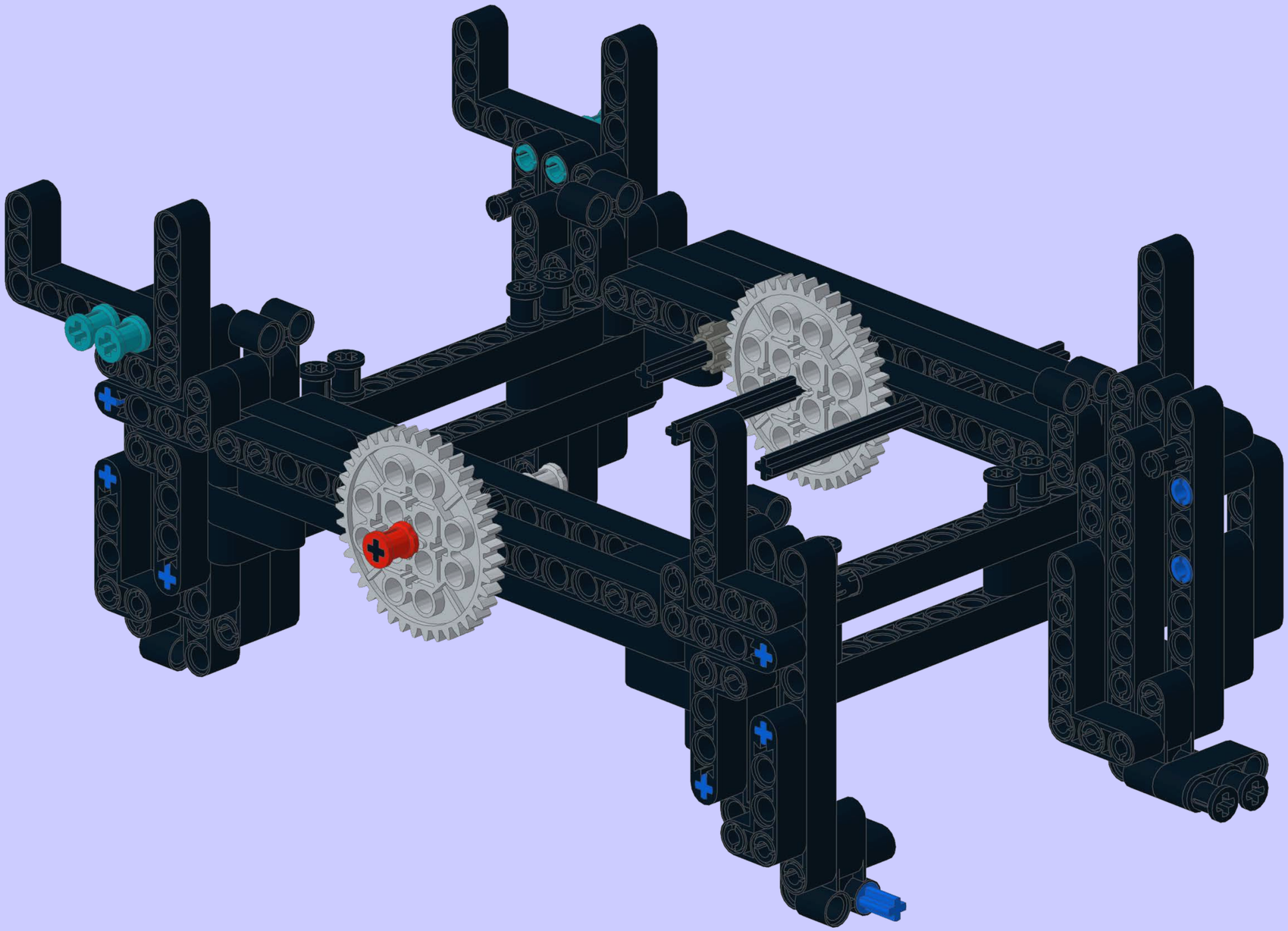

11

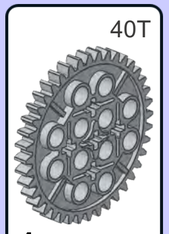


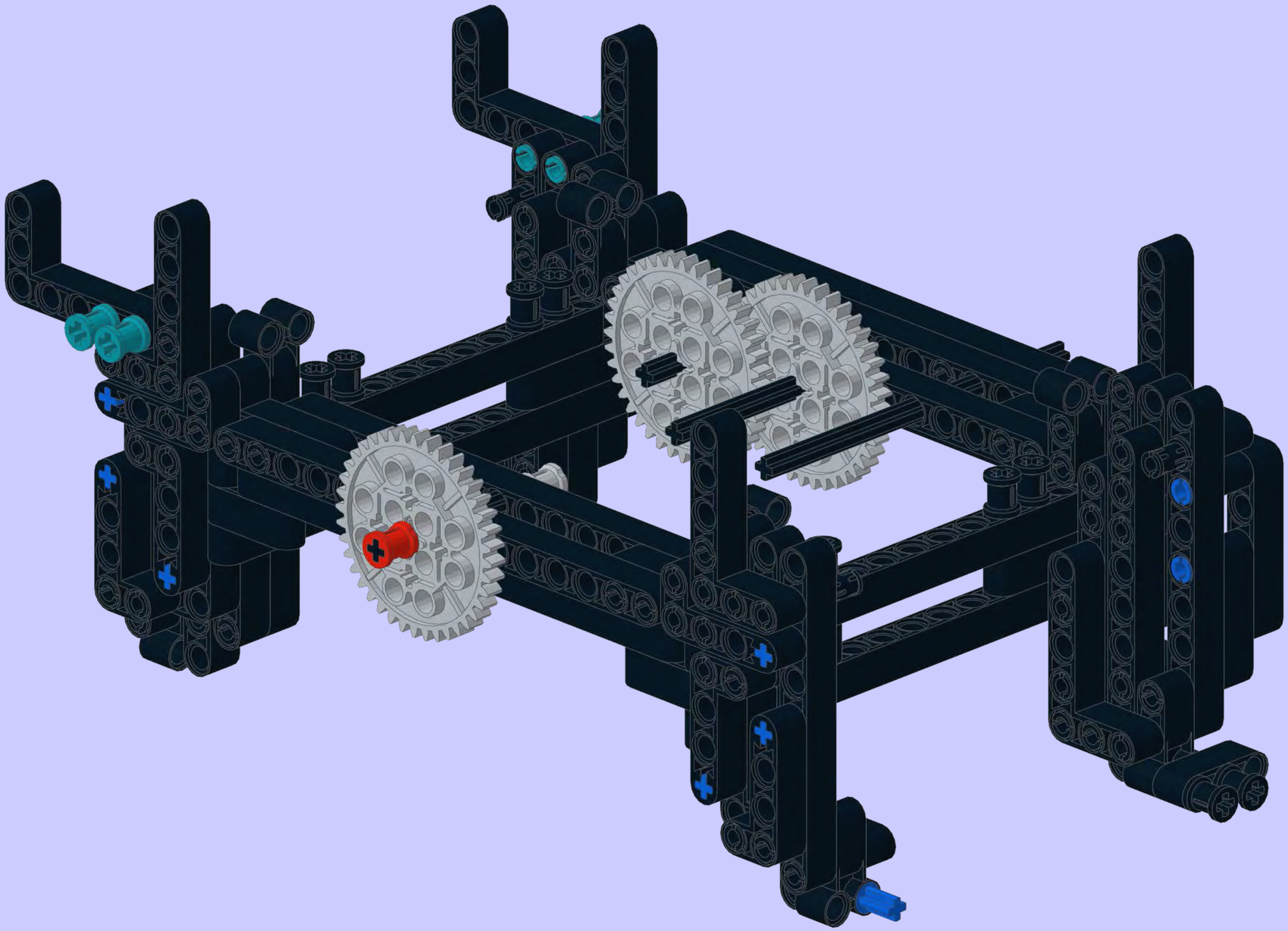

**12**

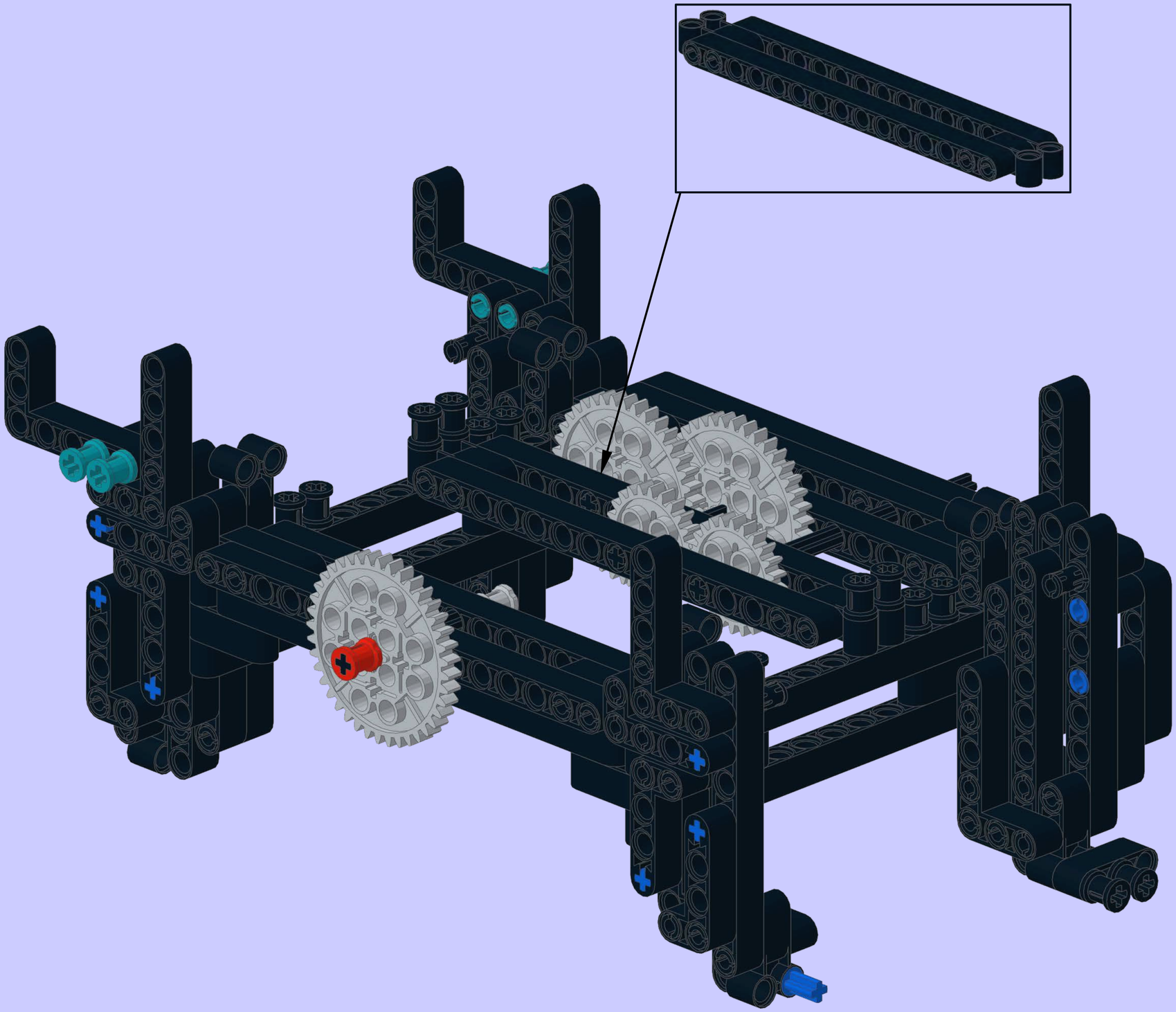

# Right Top Front (RTF) calculator - RTB drives the Moon, RBF divided by 25 drives Sun, RBF divided by 20 is sent below

1

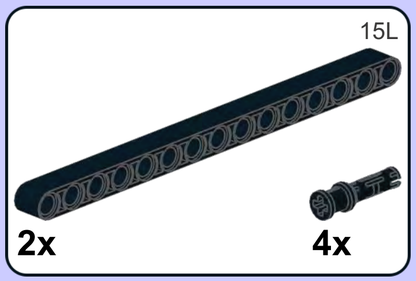


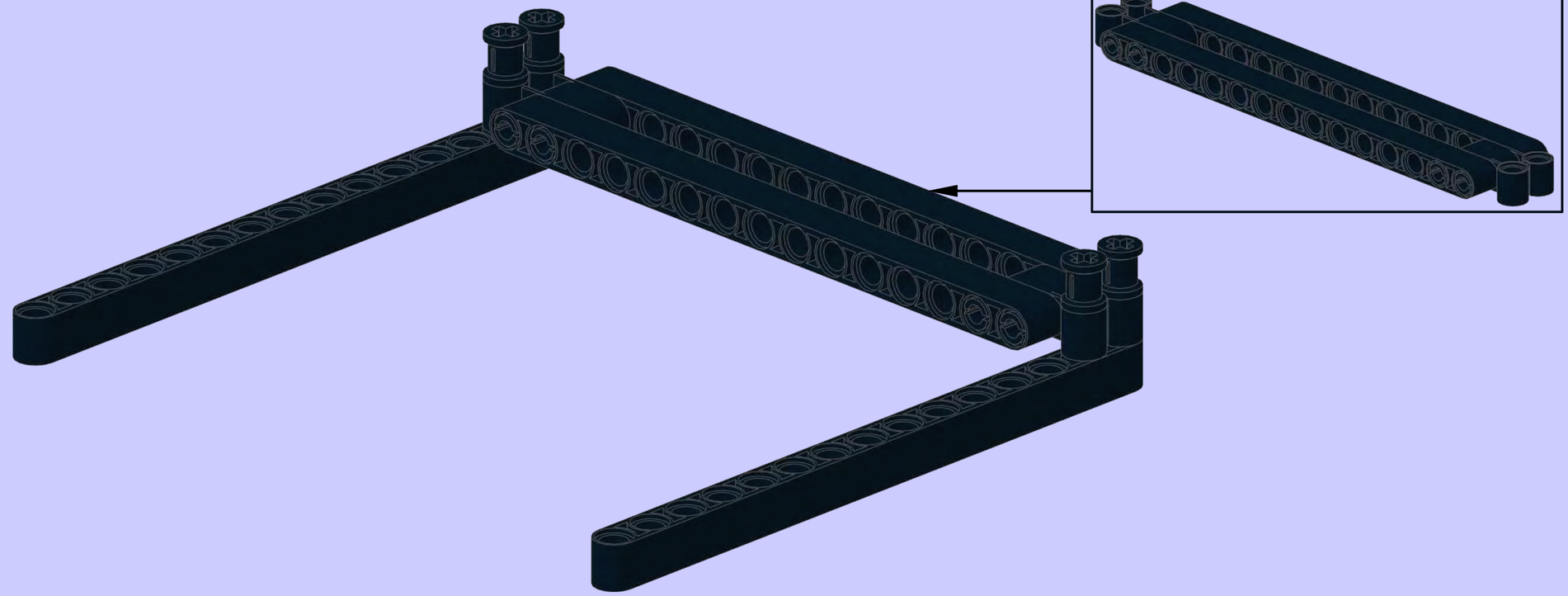

2

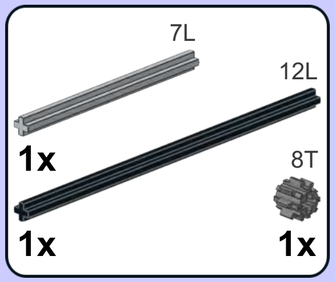


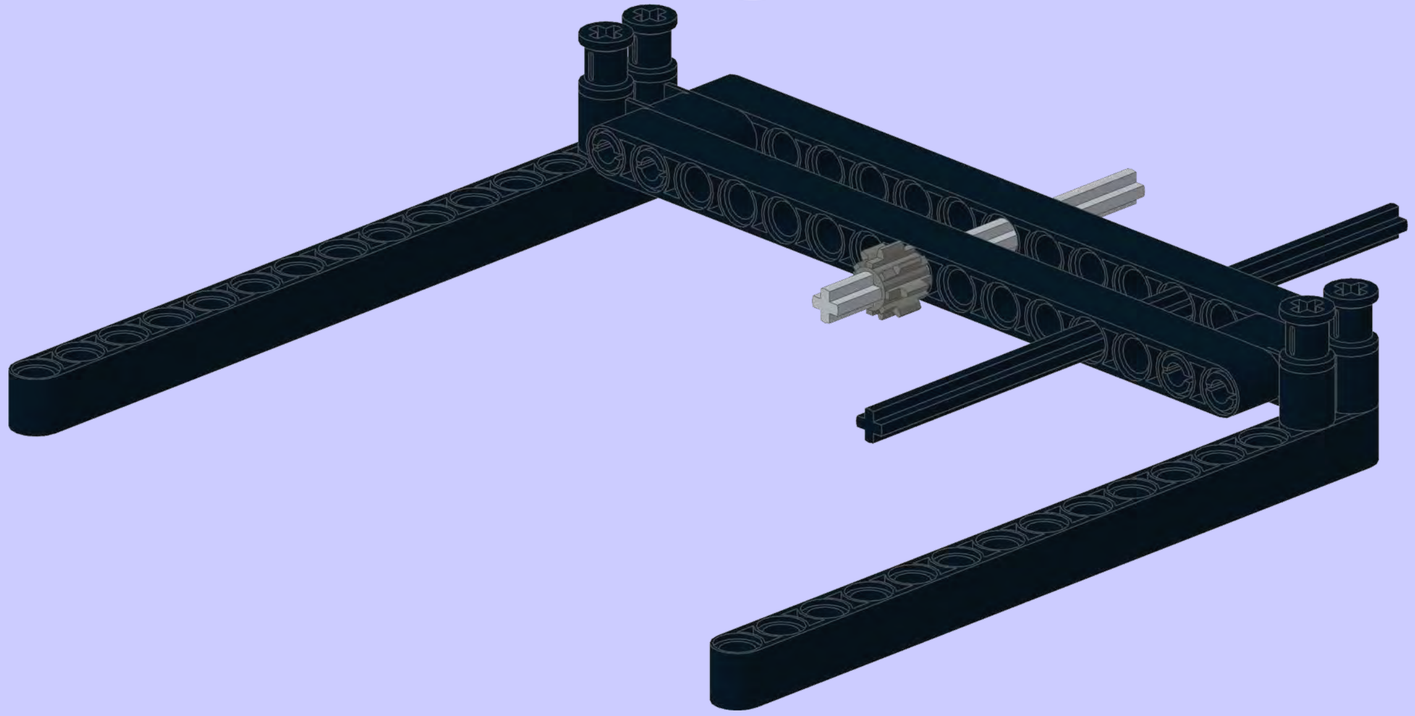

3

1x

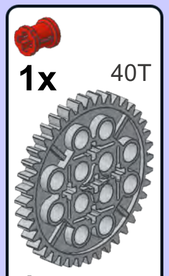


1x

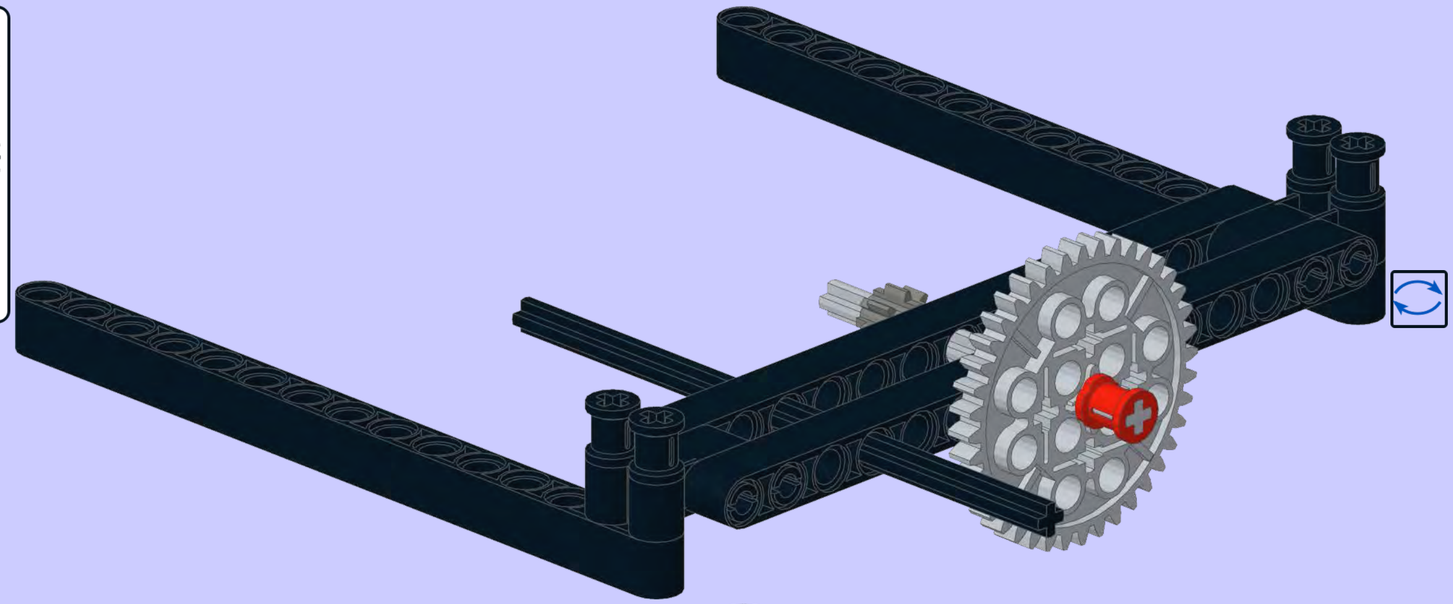

4

3x

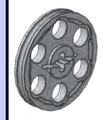

2x

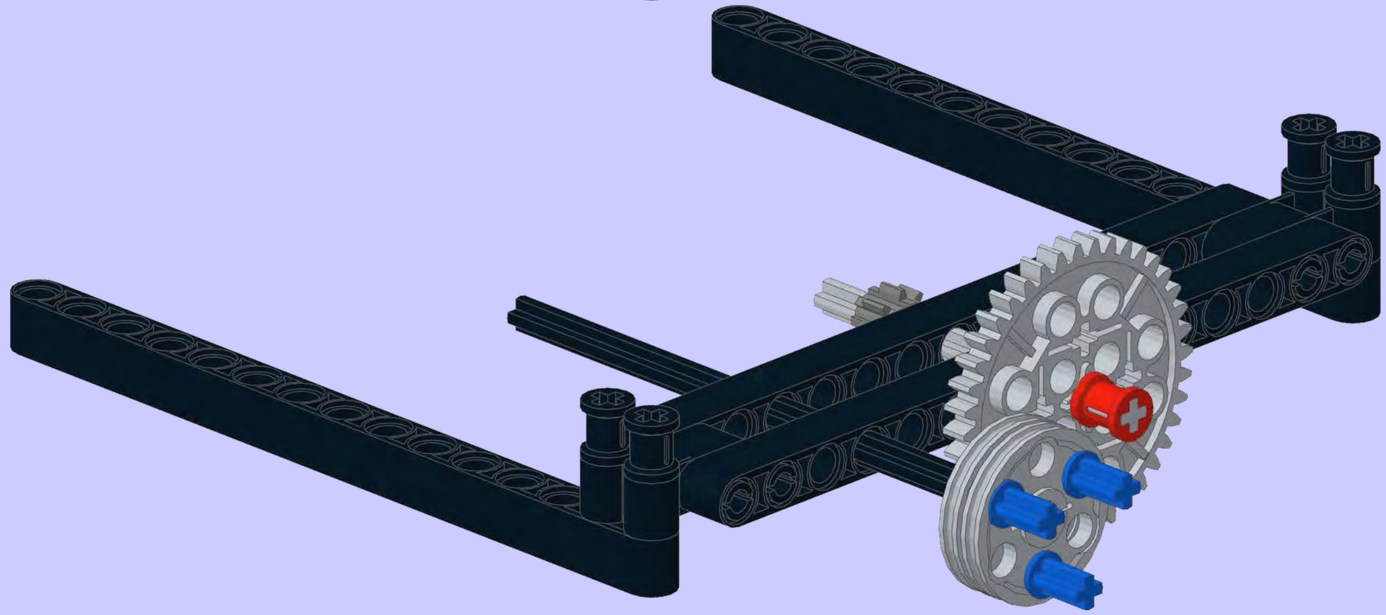

**5**

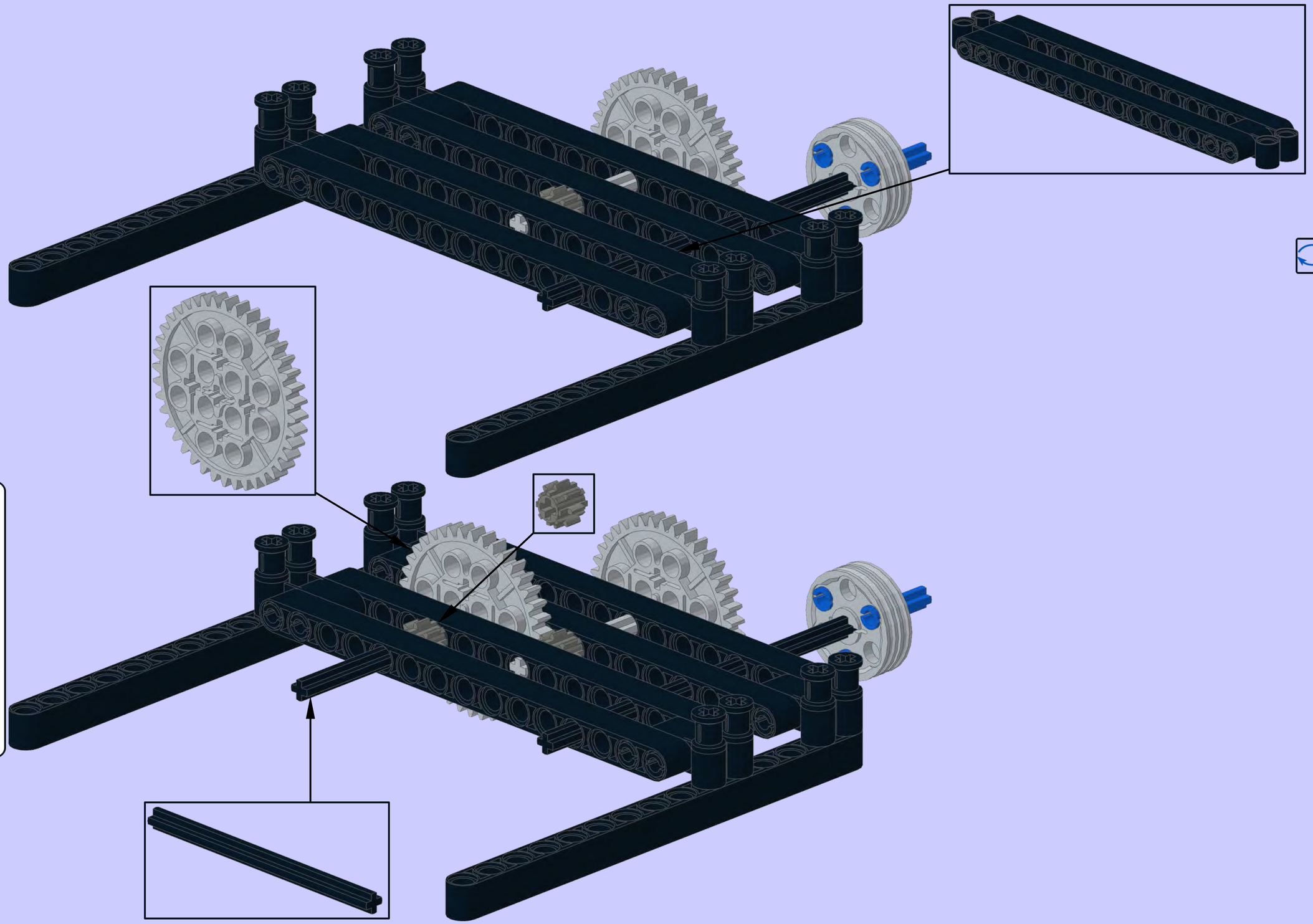

**6**

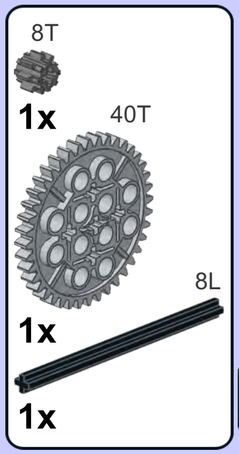

**7**

3L

**1x**

40T

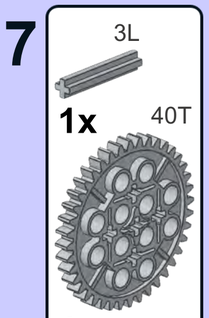

**1x**

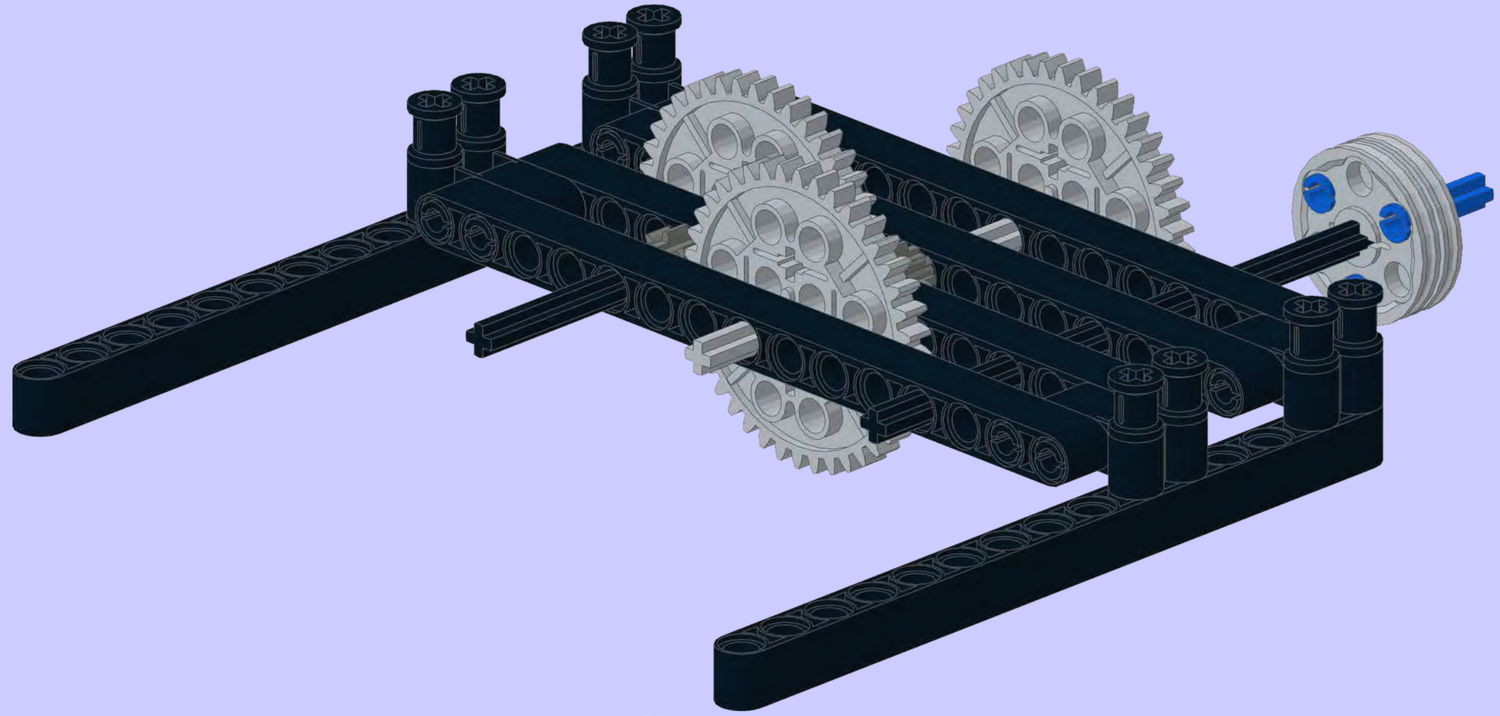

**8**

12L

**1x**

**1x**

**2x**

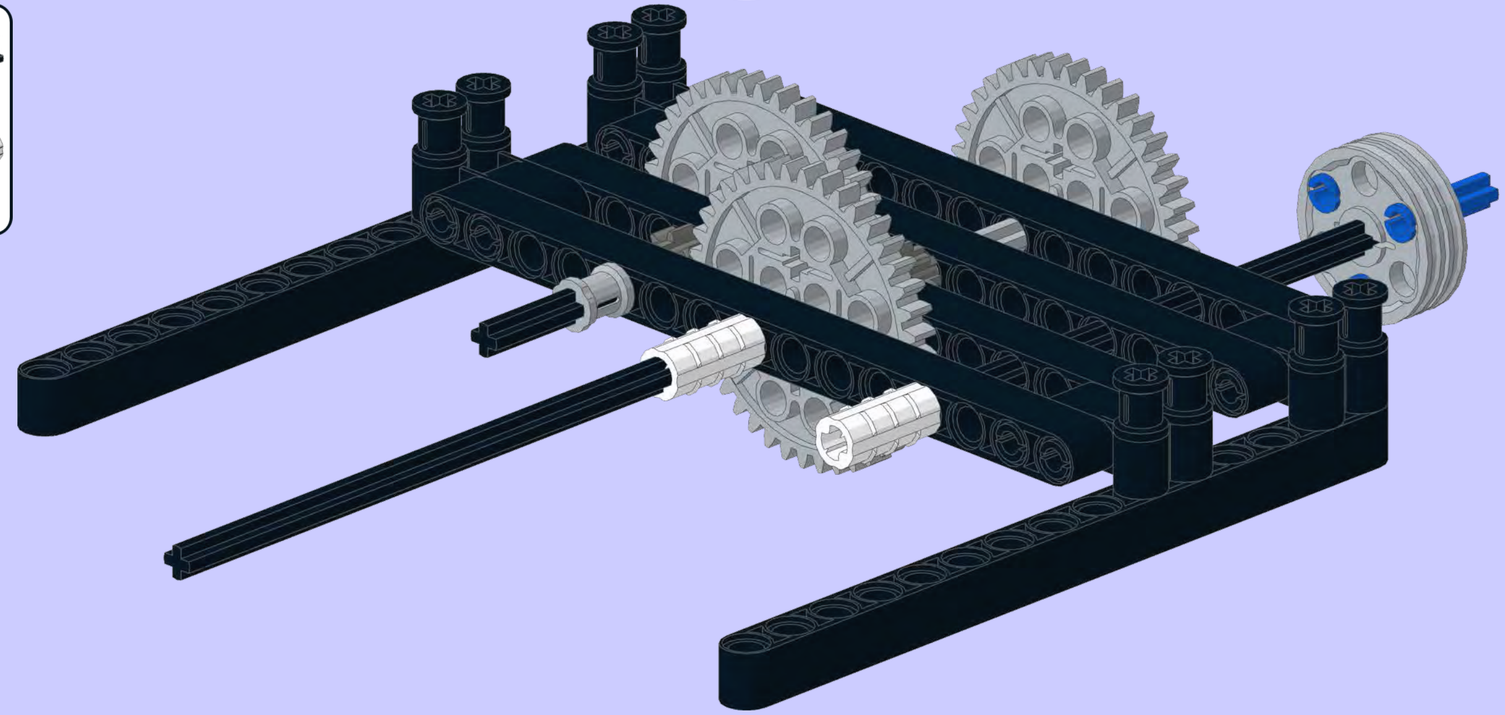

**9**

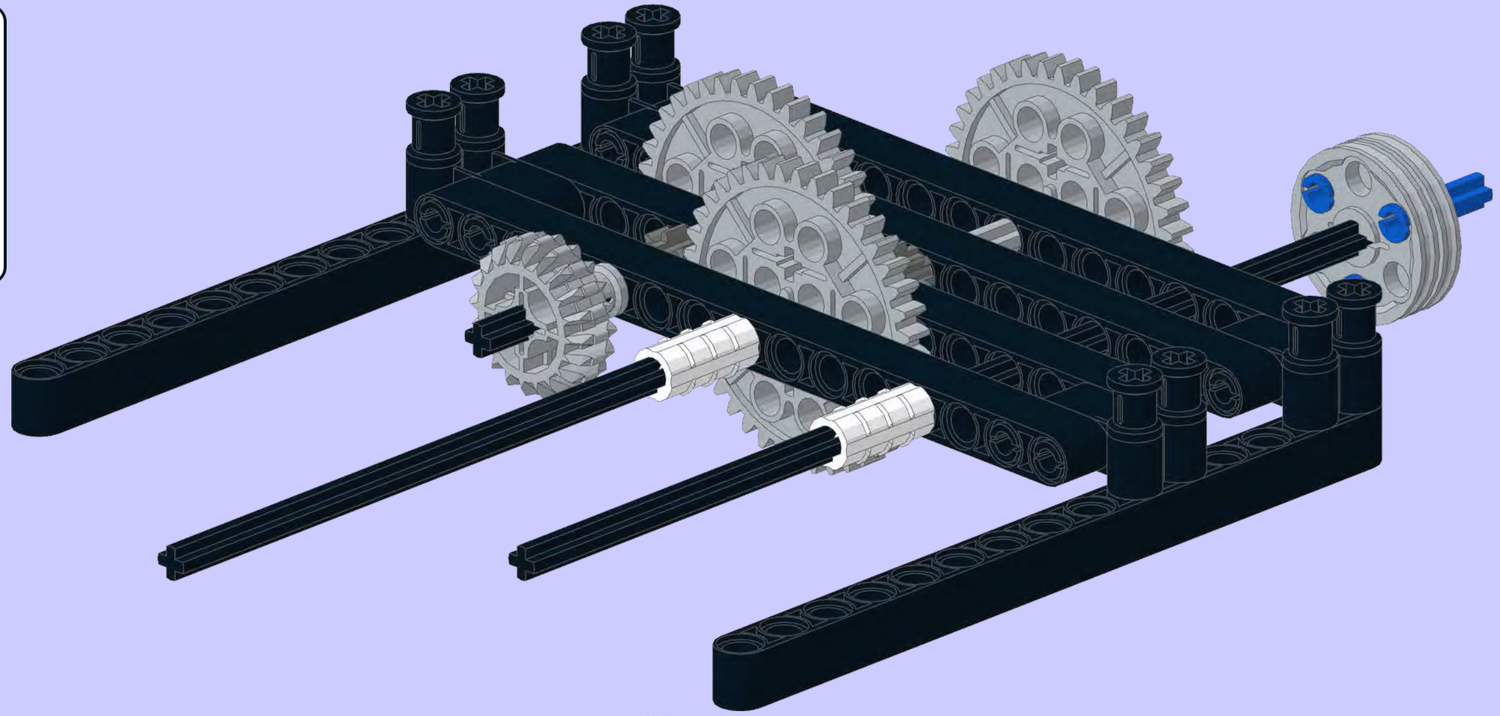

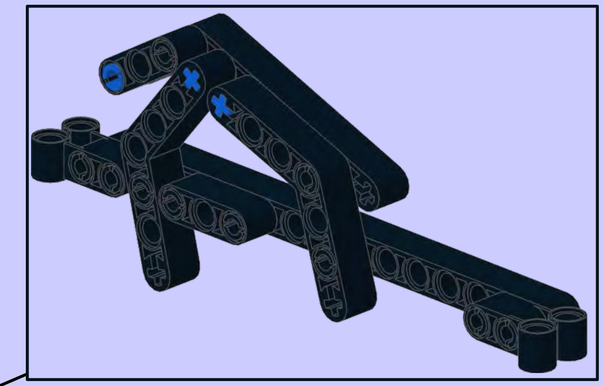

**10**

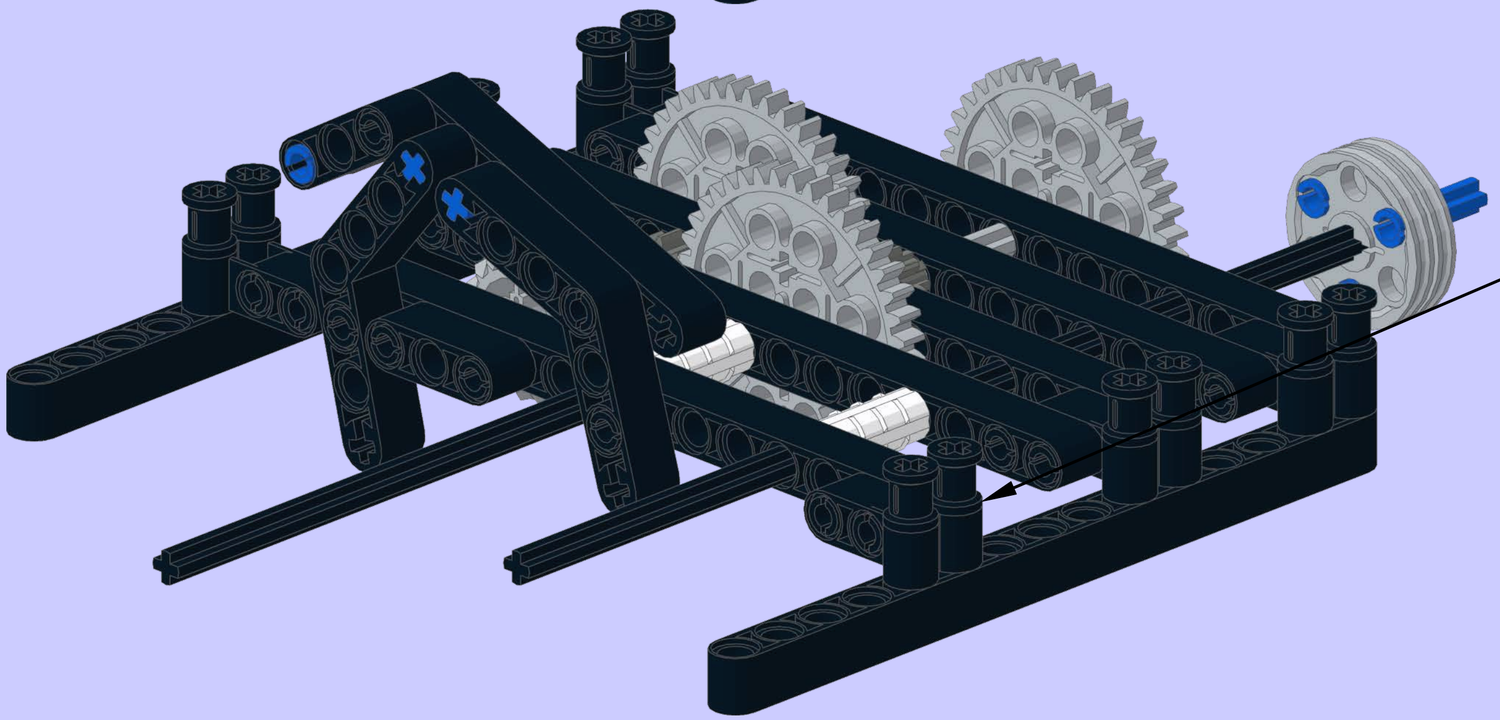

**11**

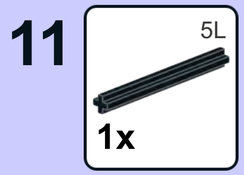


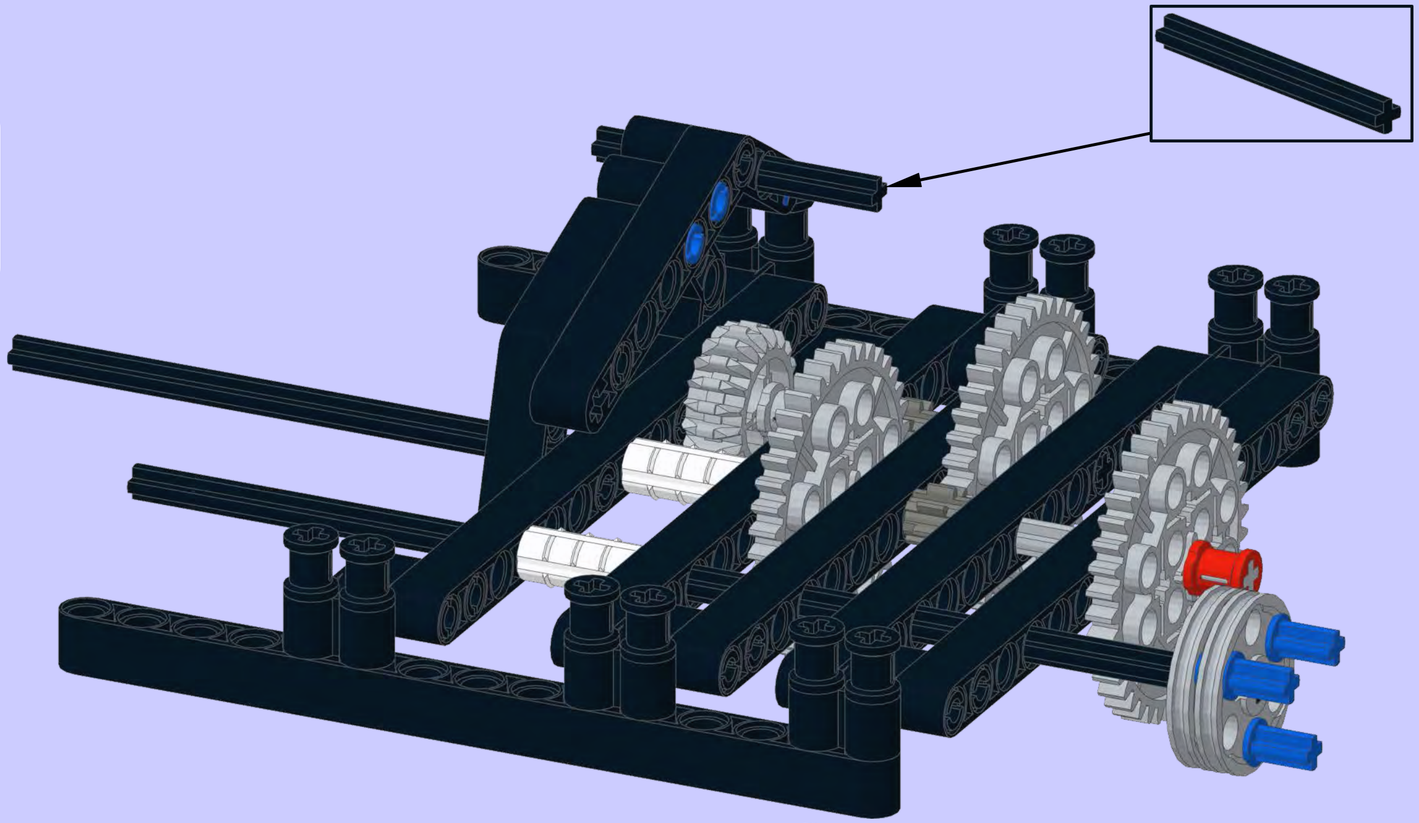

**12**

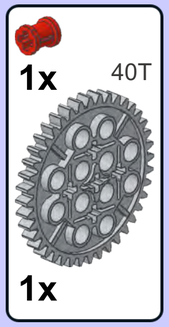


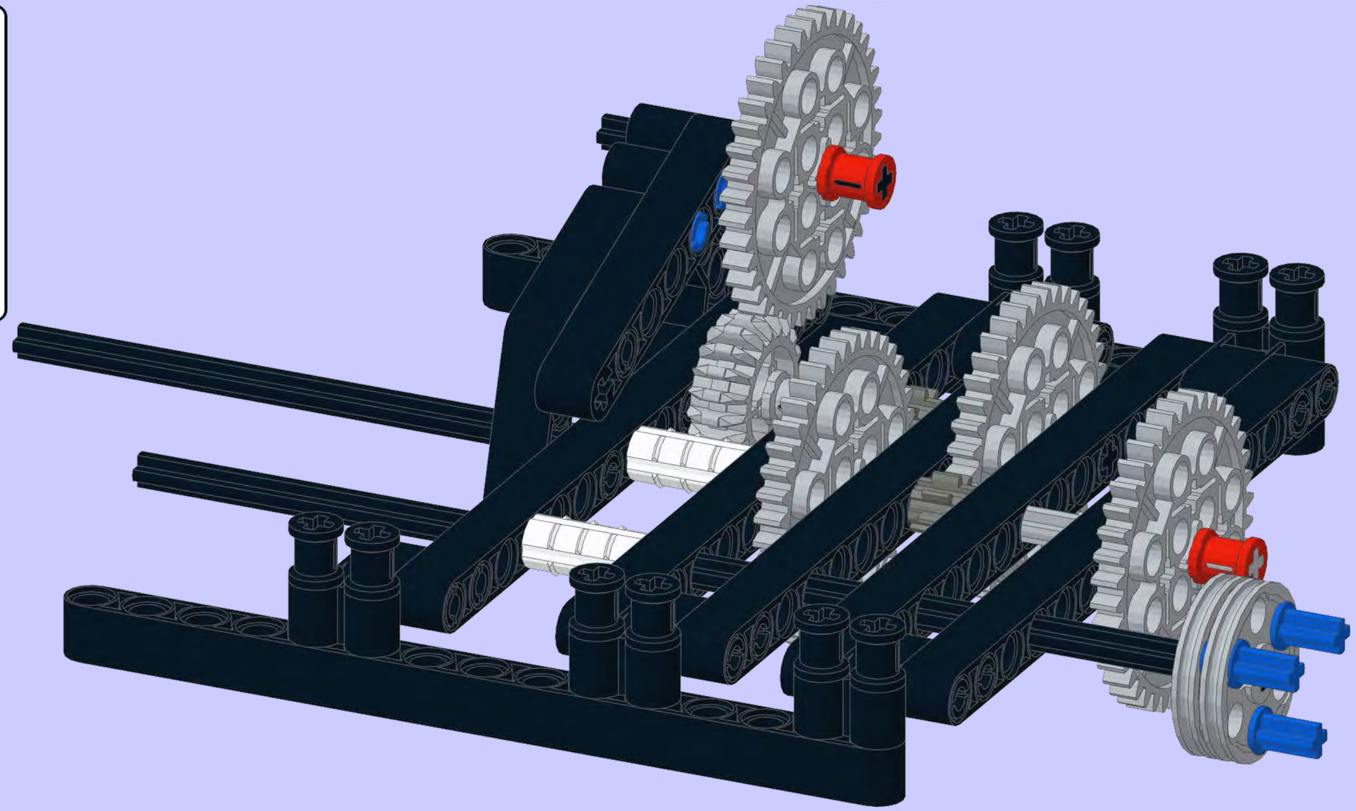

13

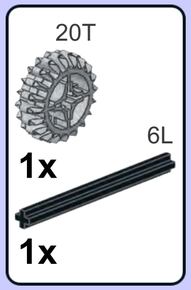


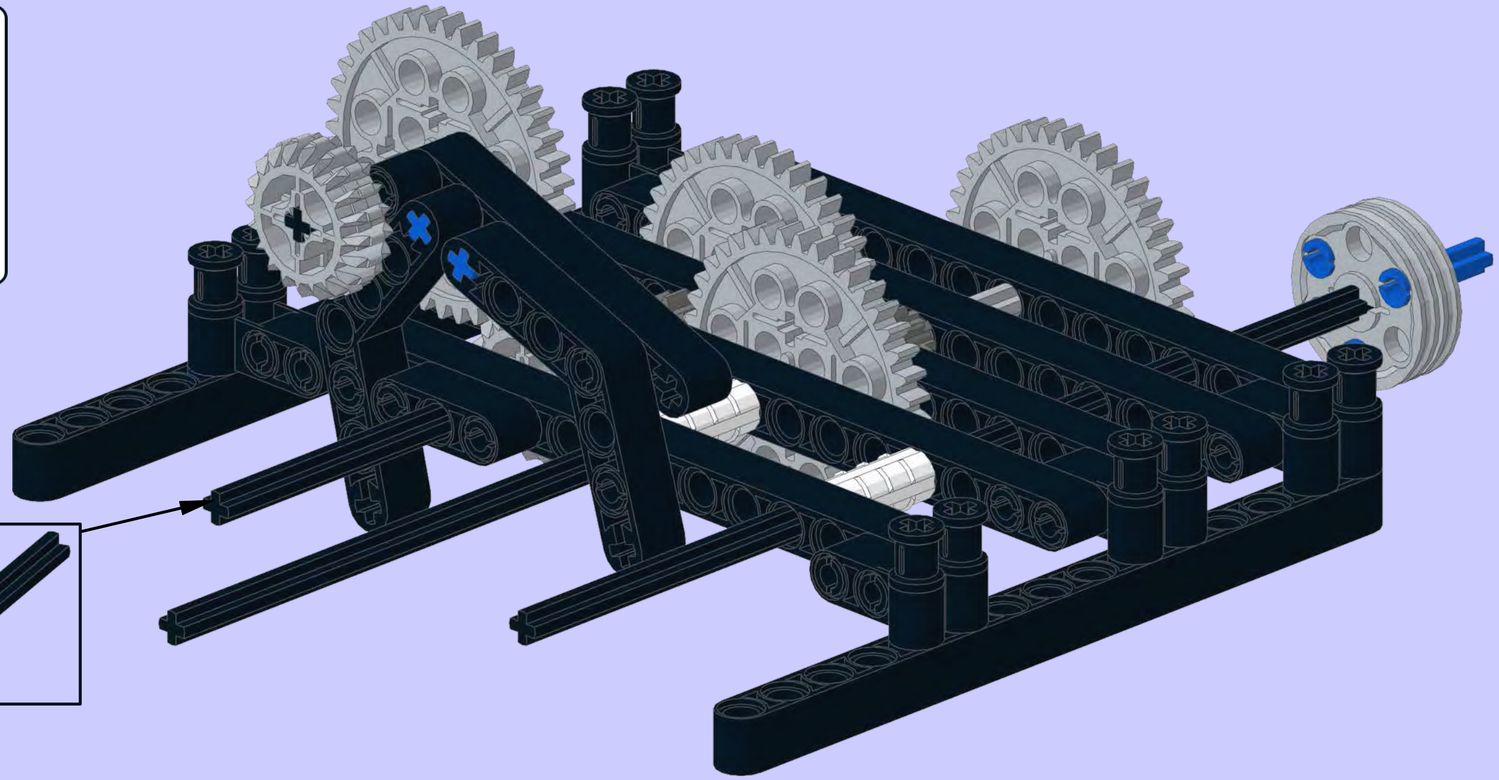

14

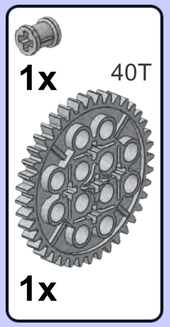


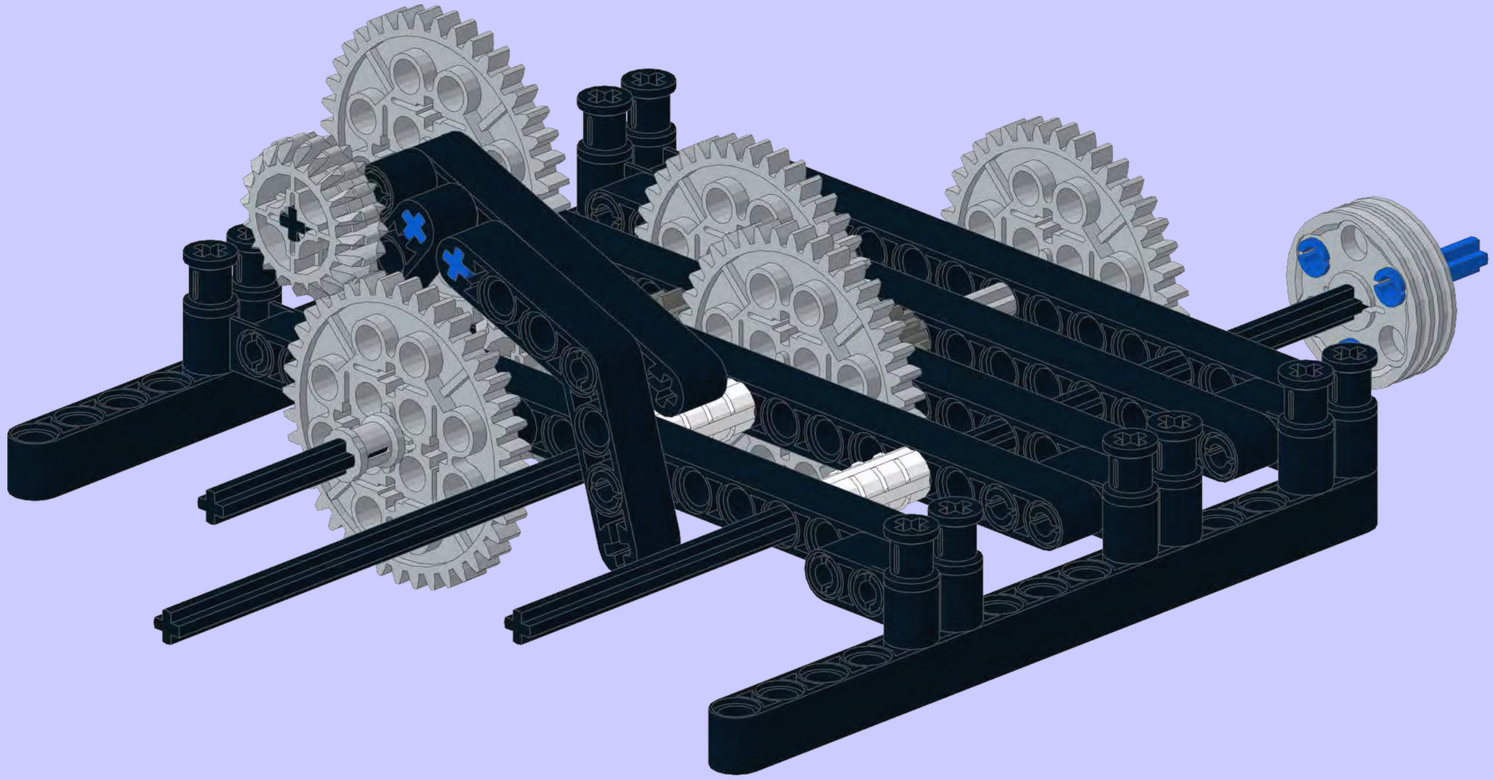

**15**

16T

**1x**

**4x**

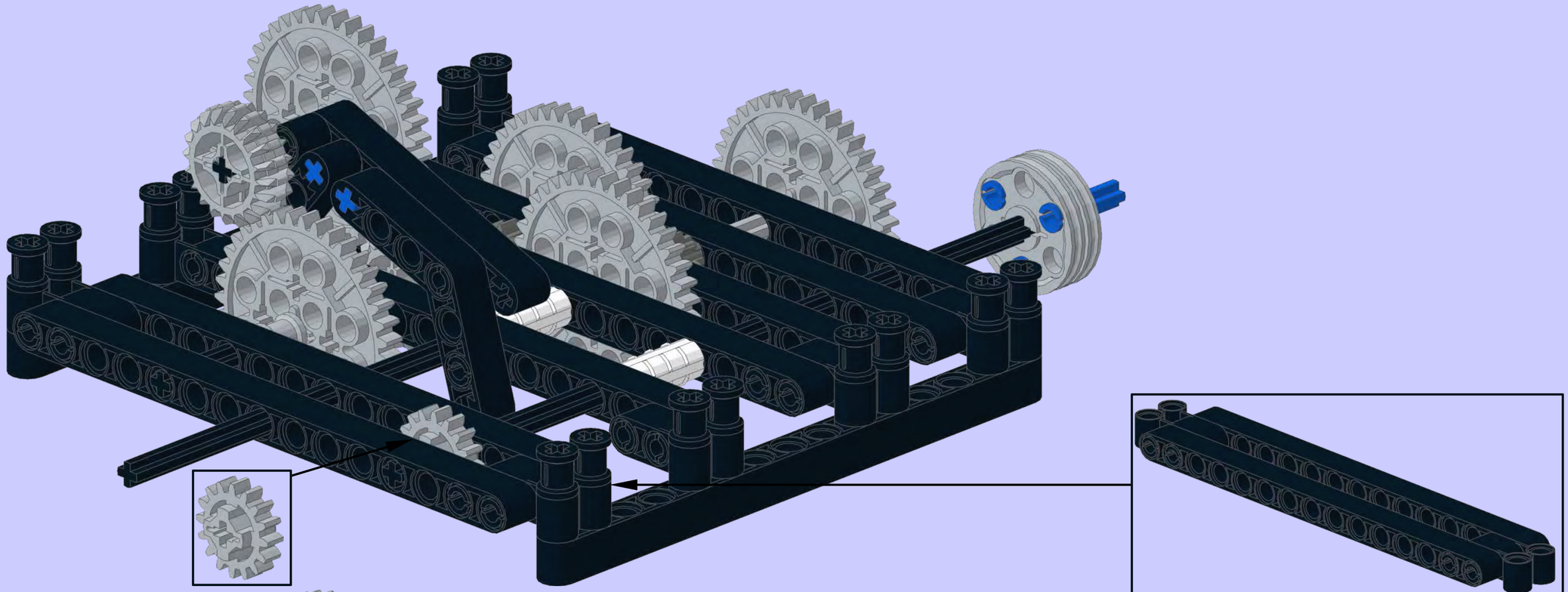

**16**

16T

**1x**

5L

**1x**

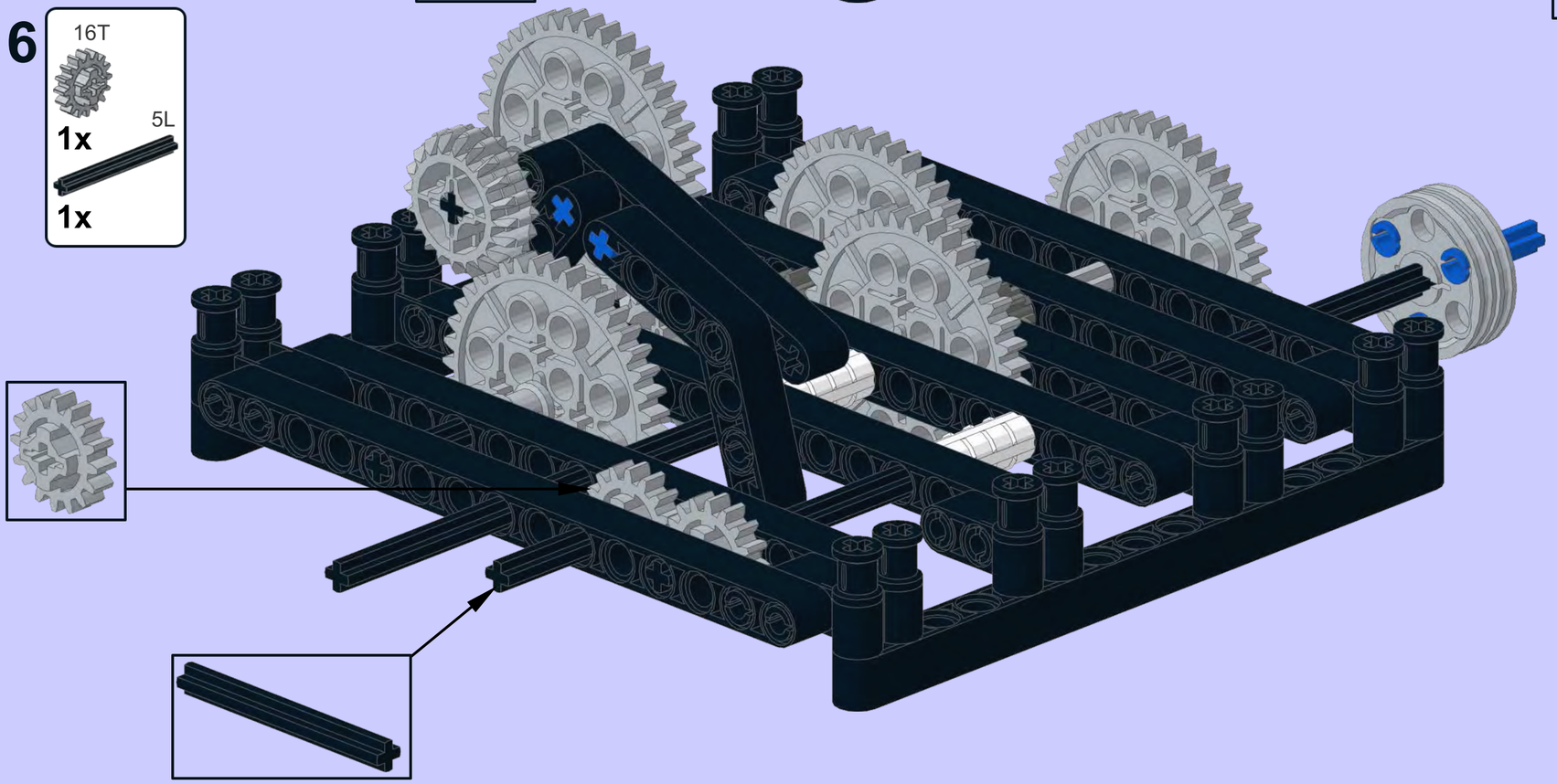

17

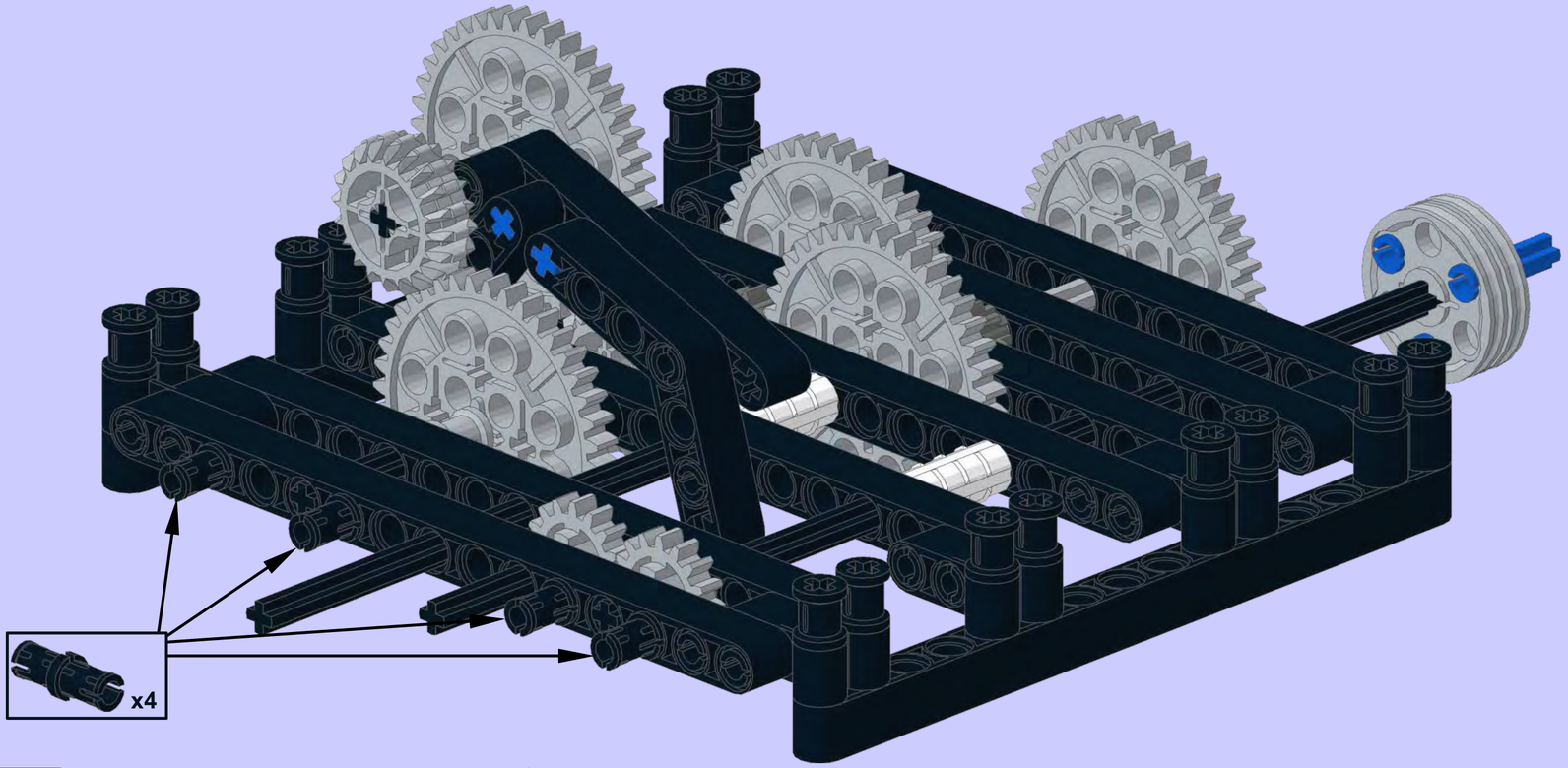


18

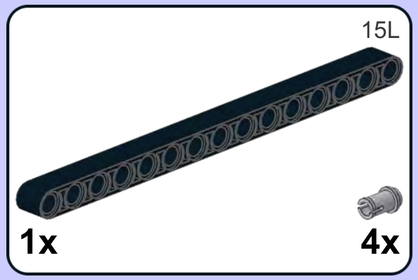


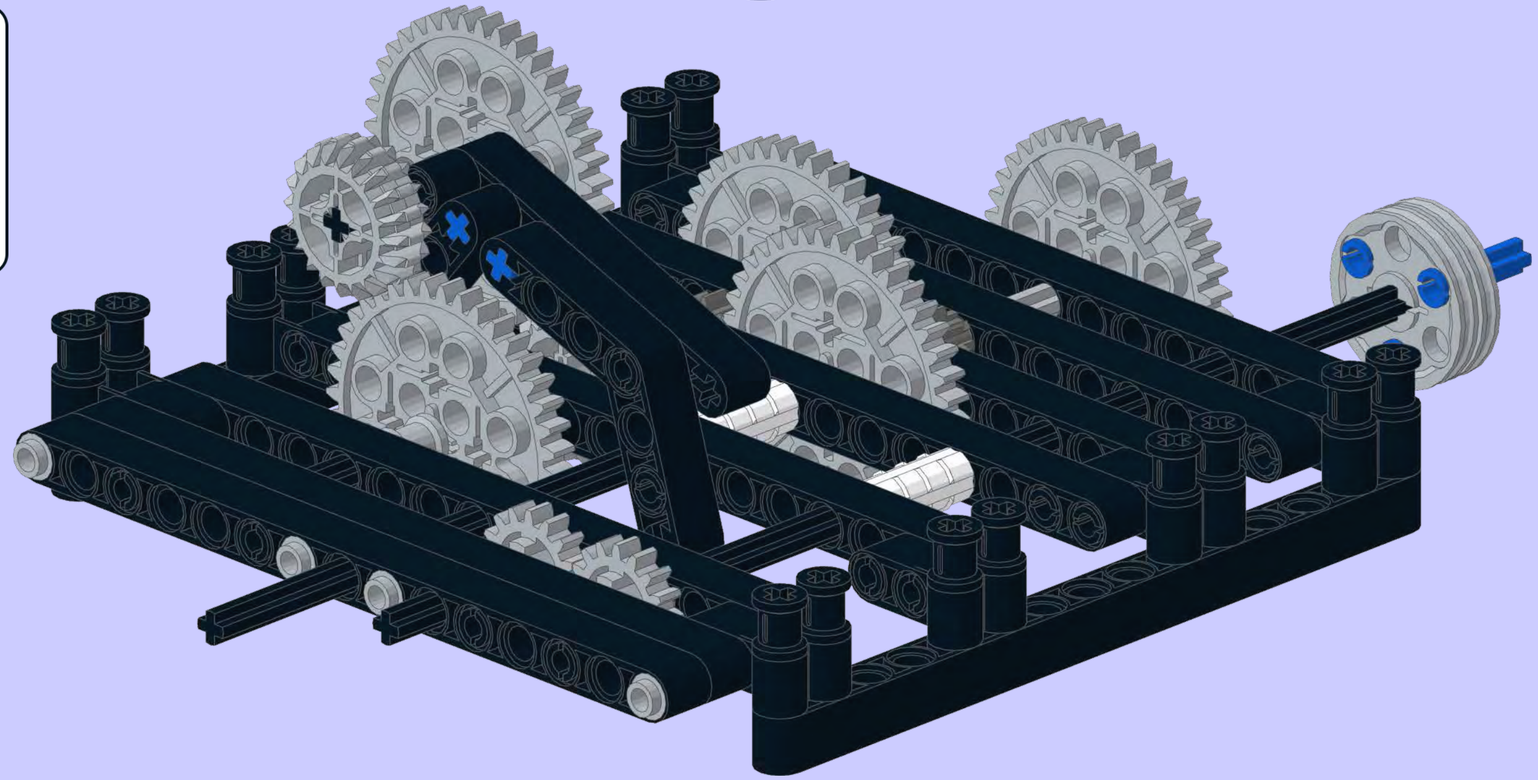

**19**

16T

1x

1x

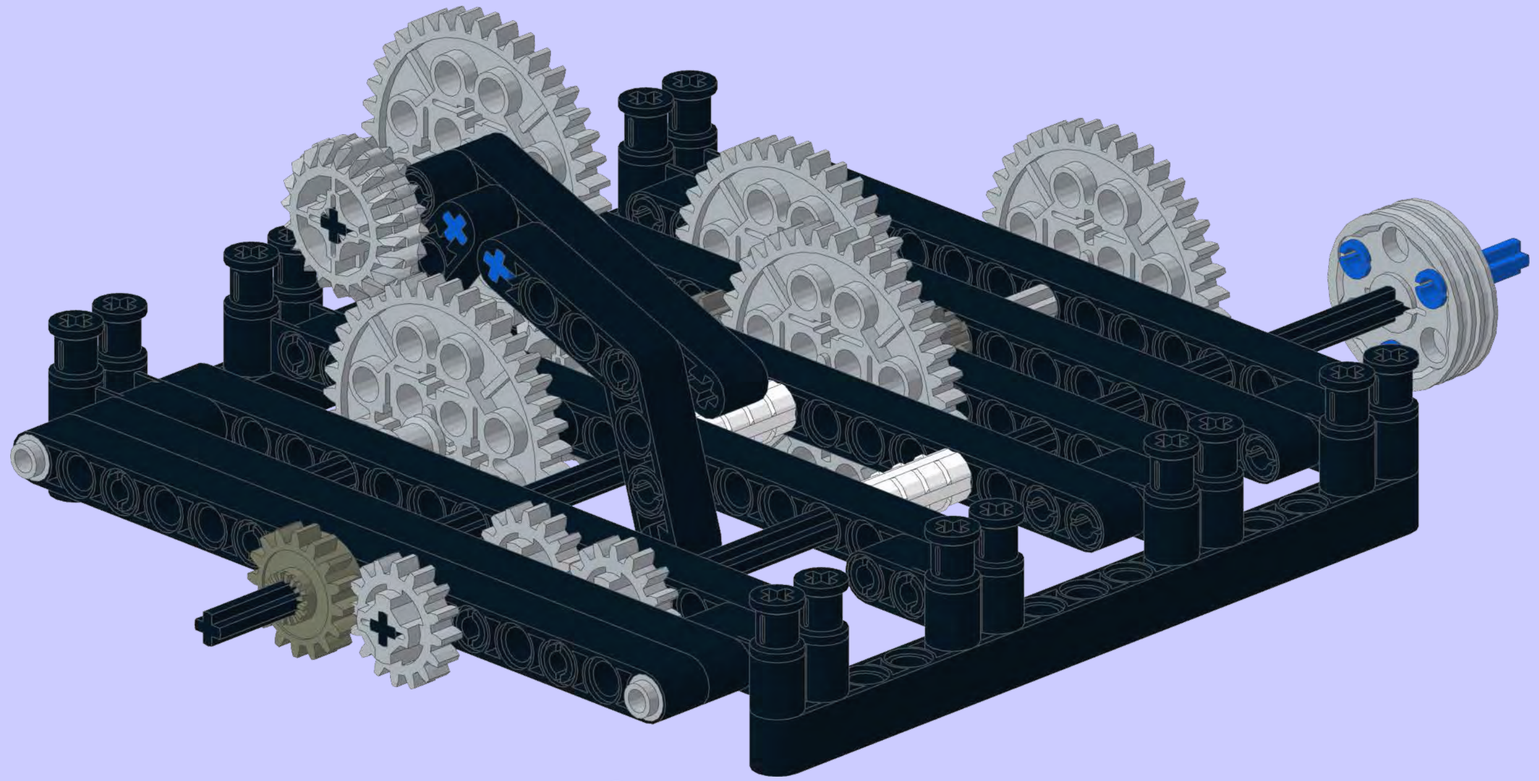

**20**

8x

4x

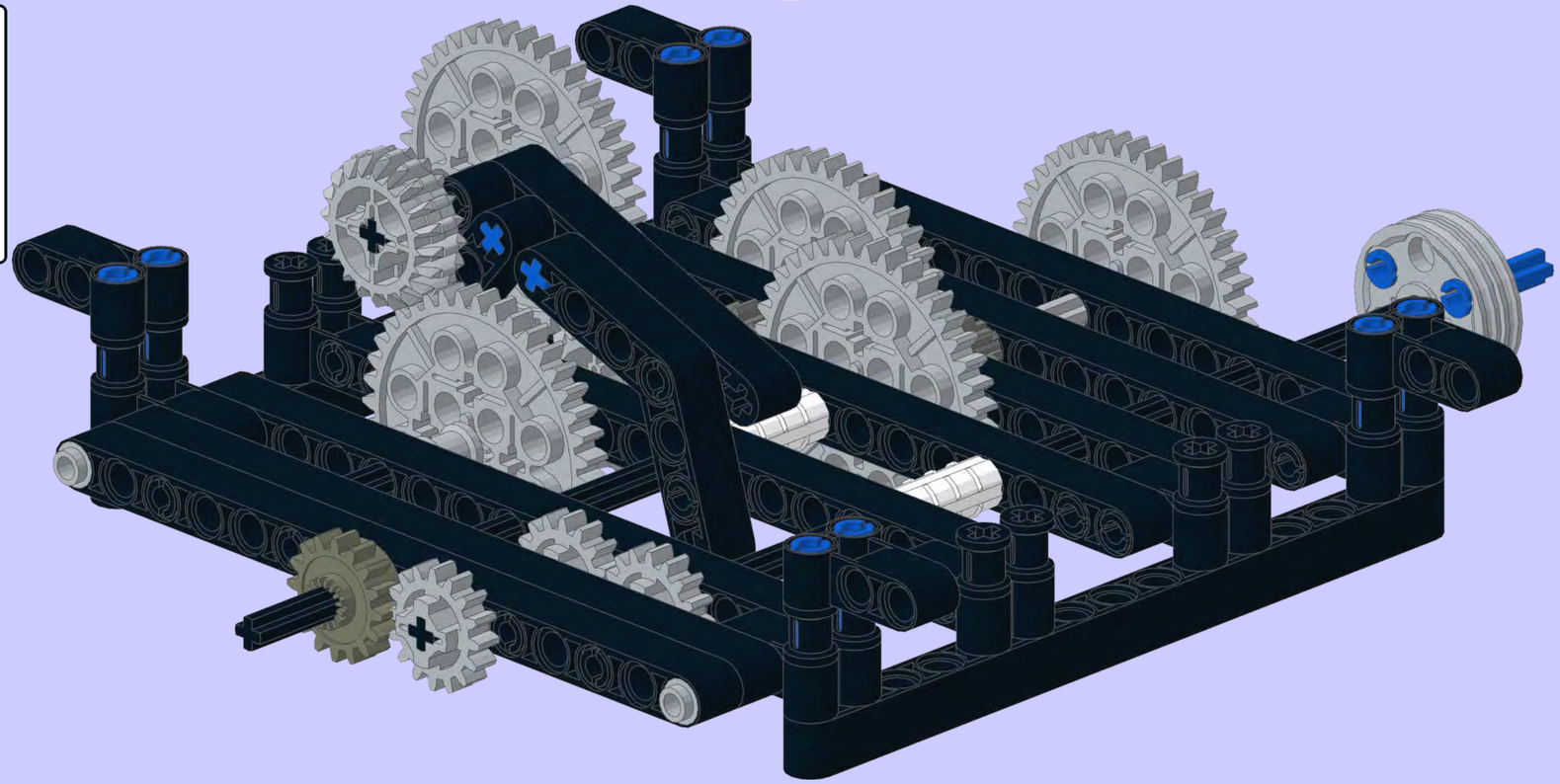

13

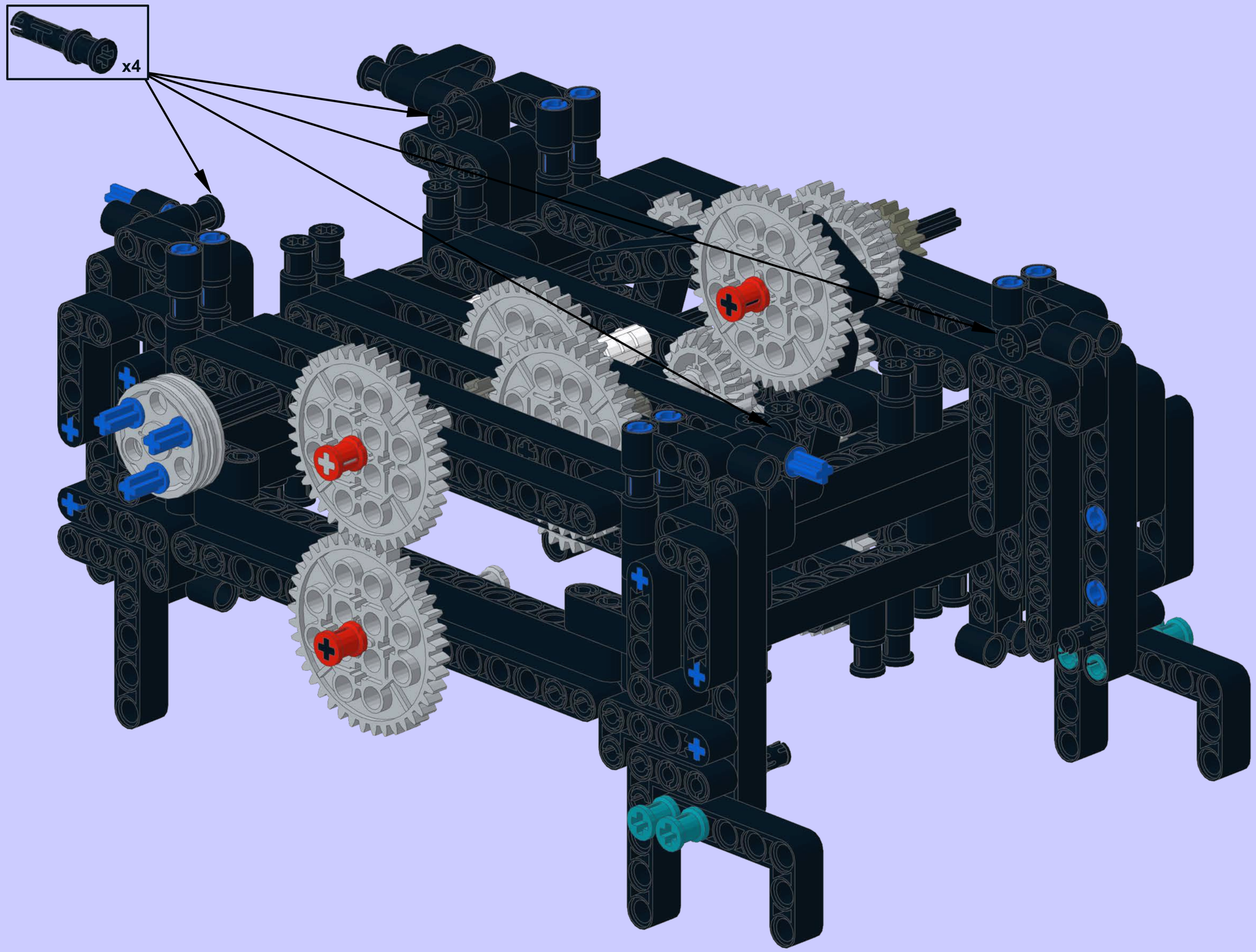

14

8x

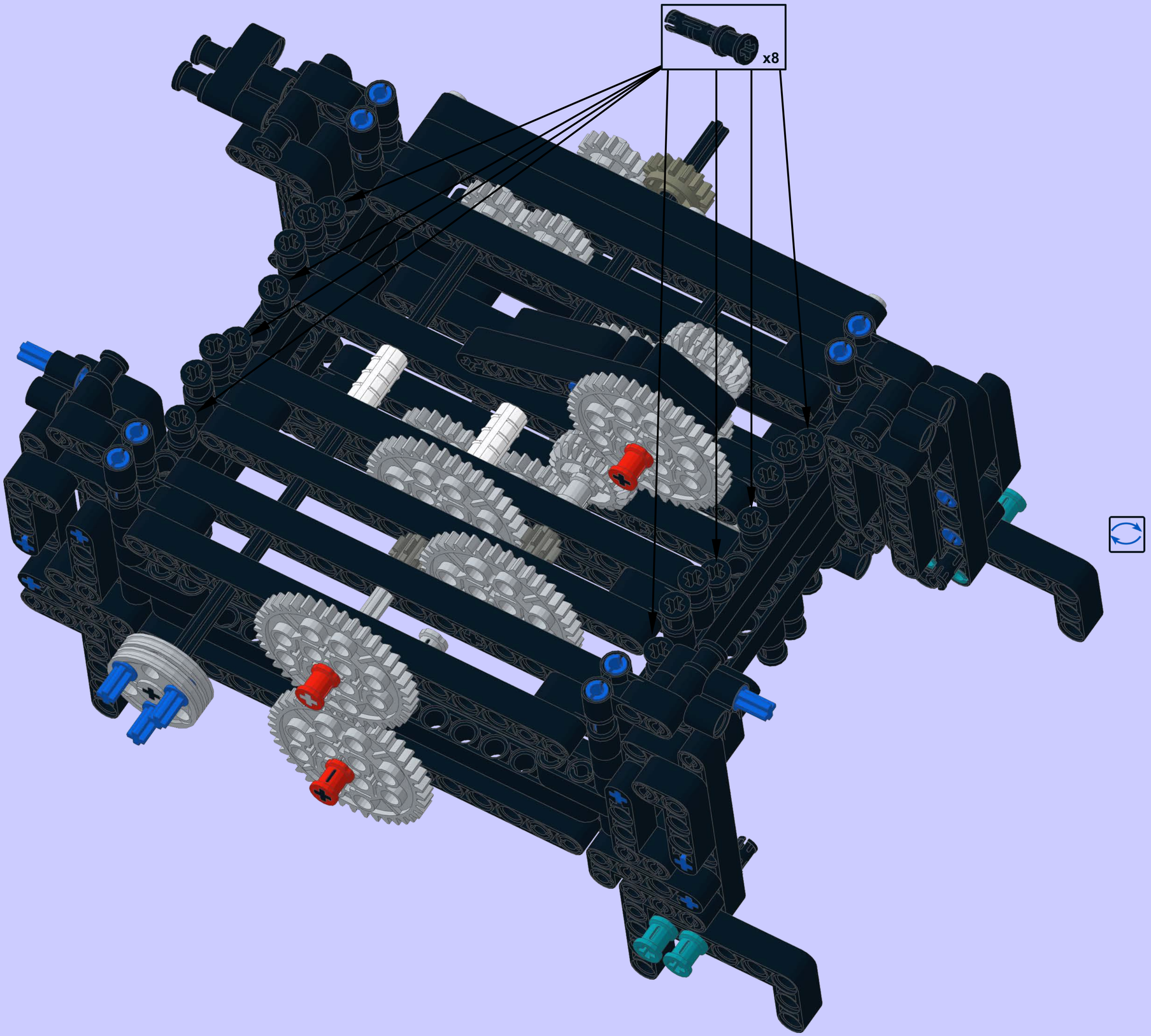

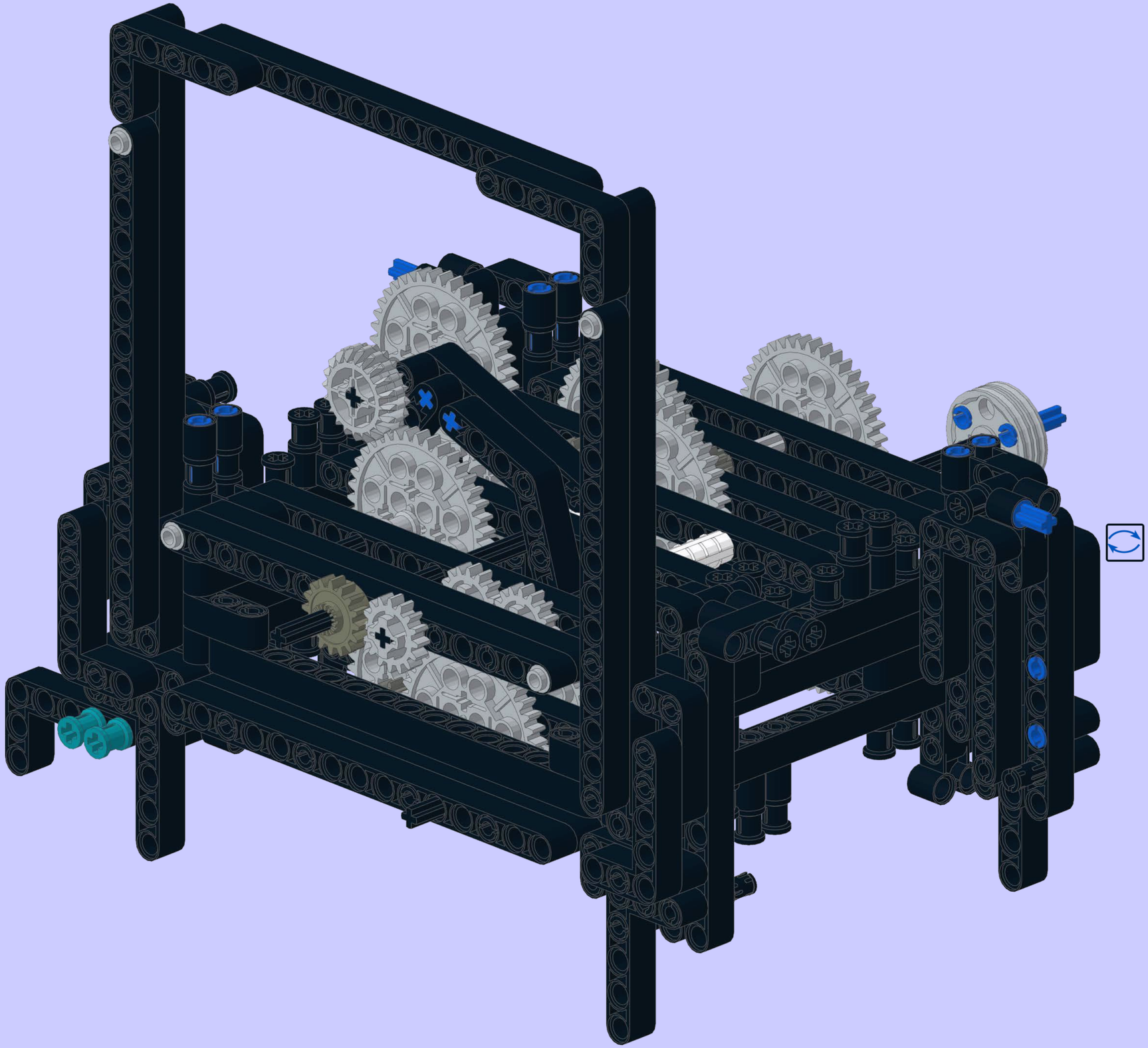

1

## "Stack" - Right Front

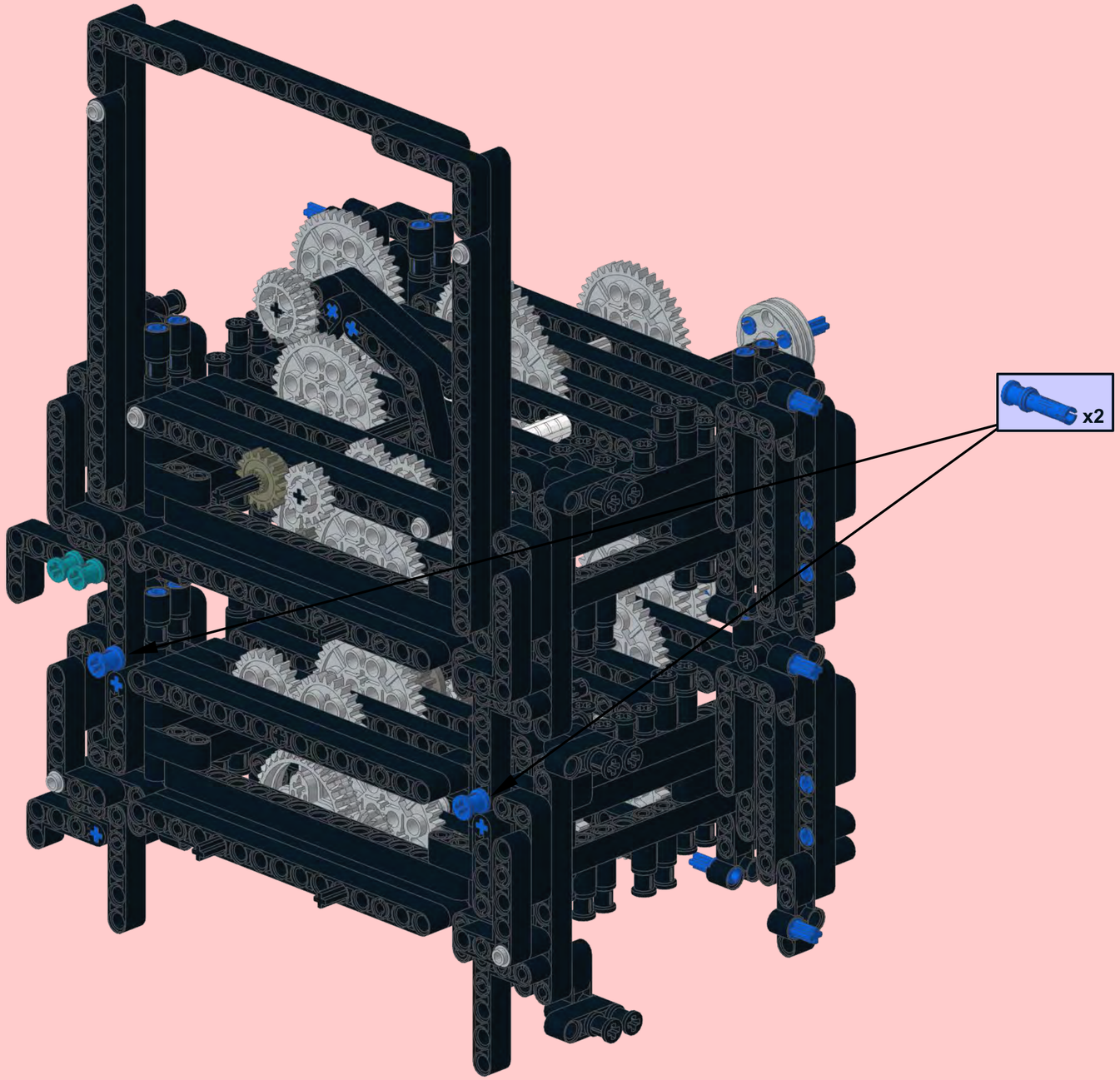

2

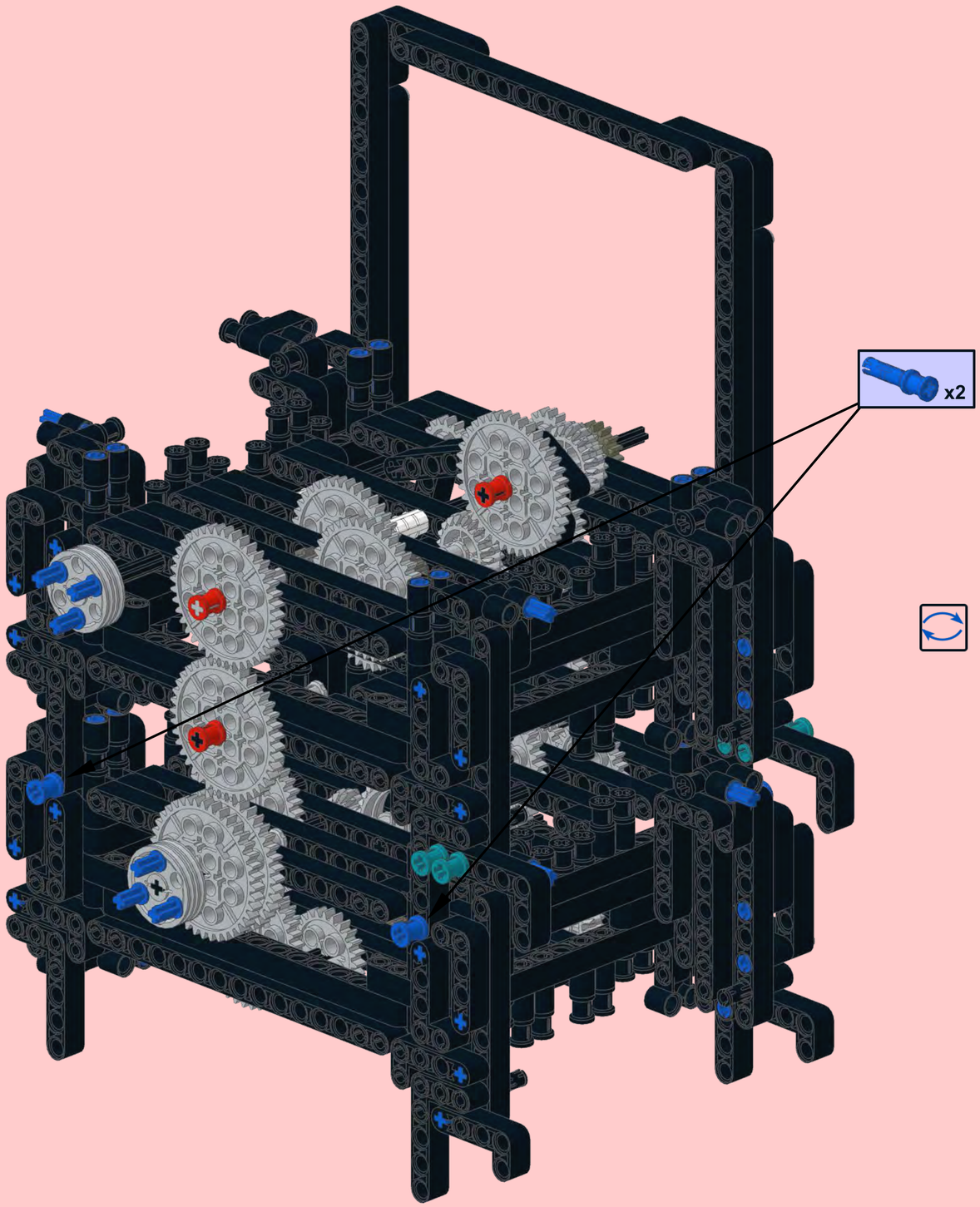

5

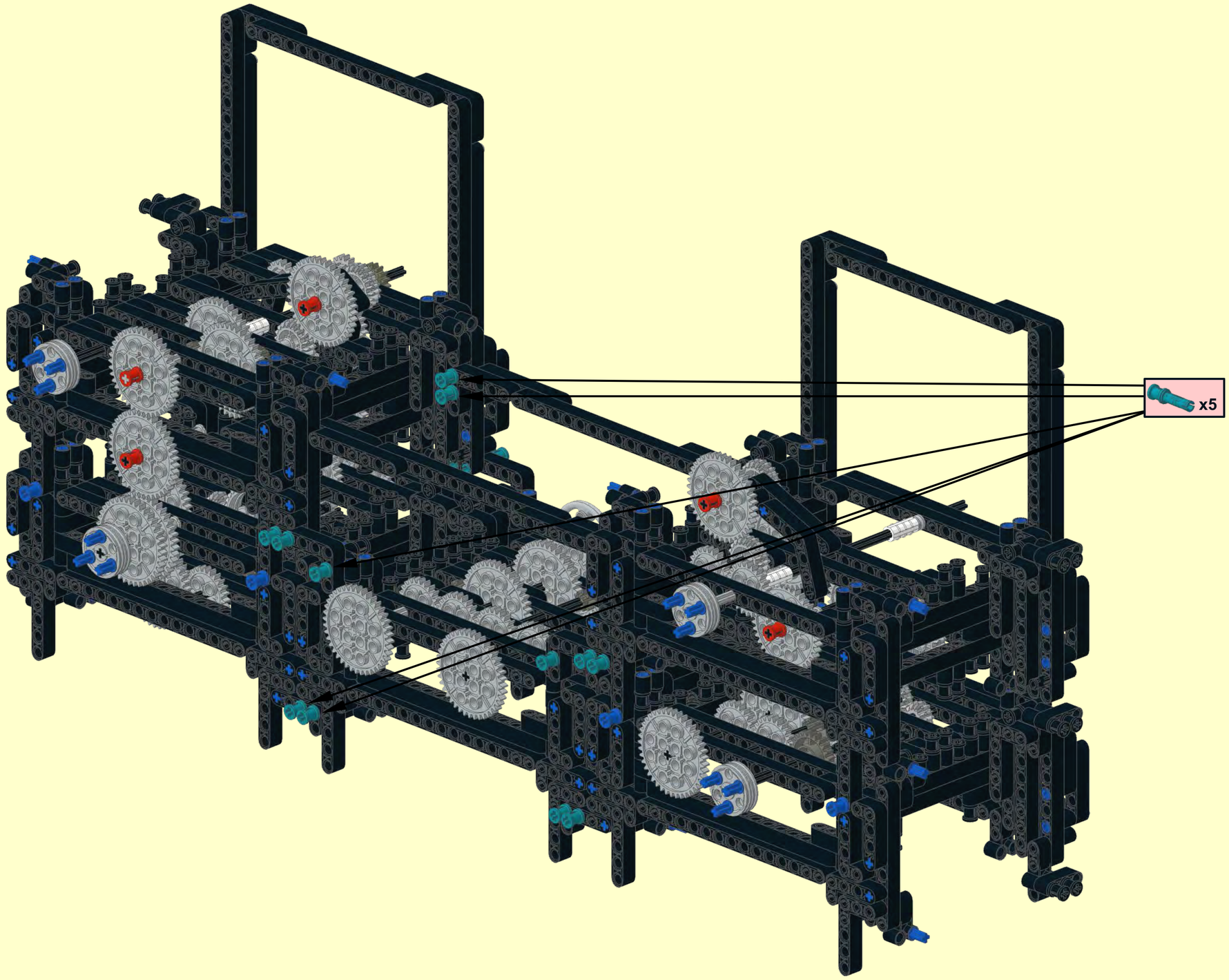

6 126x

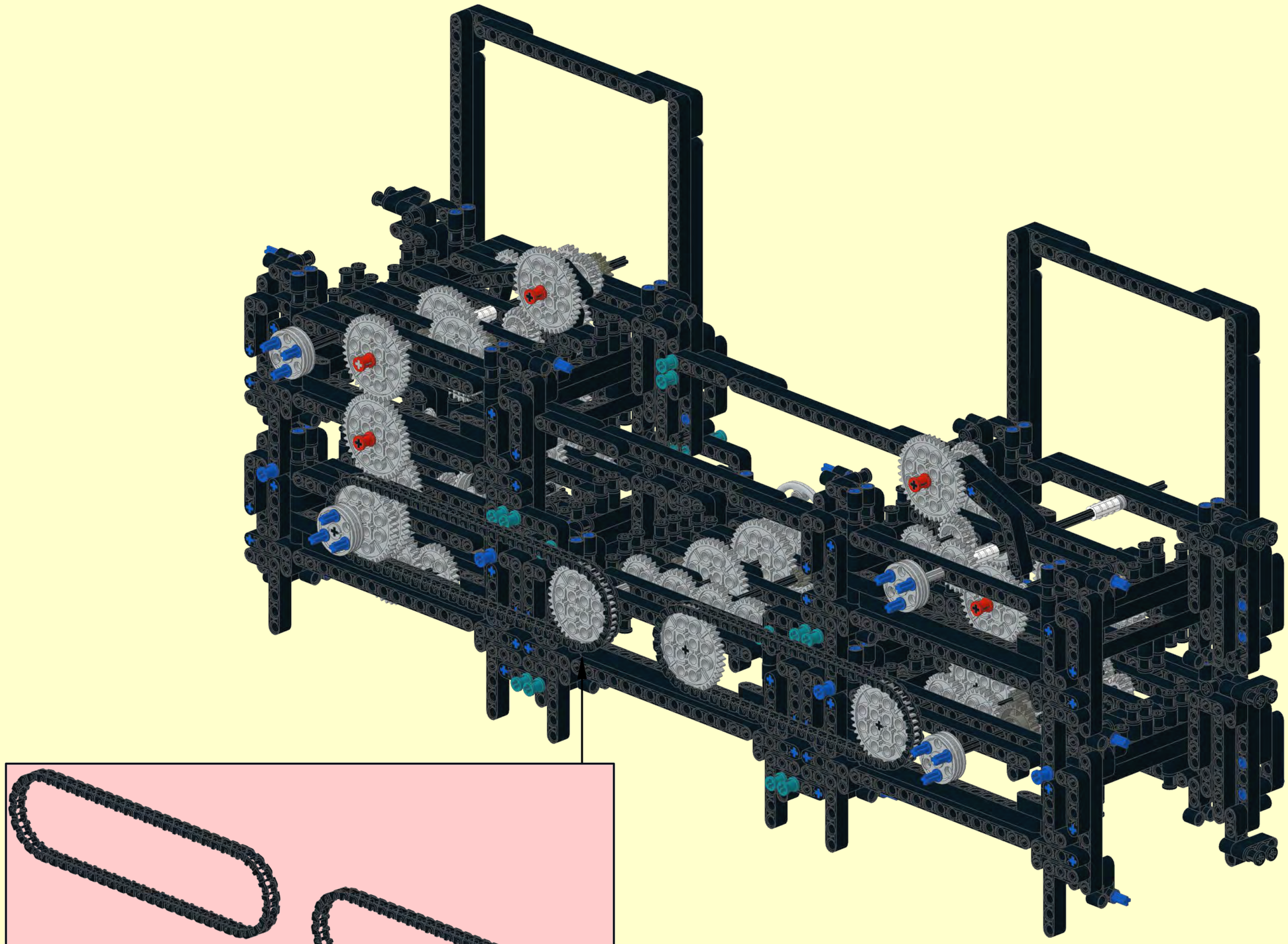

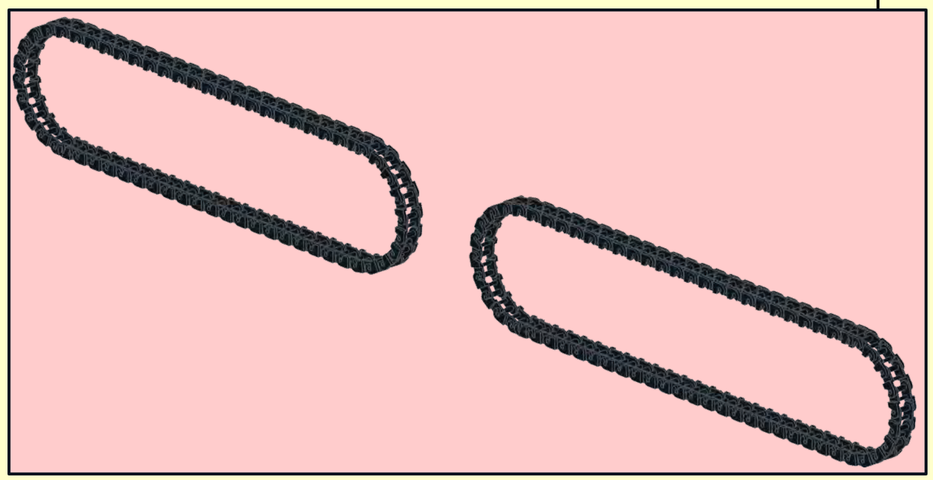

7

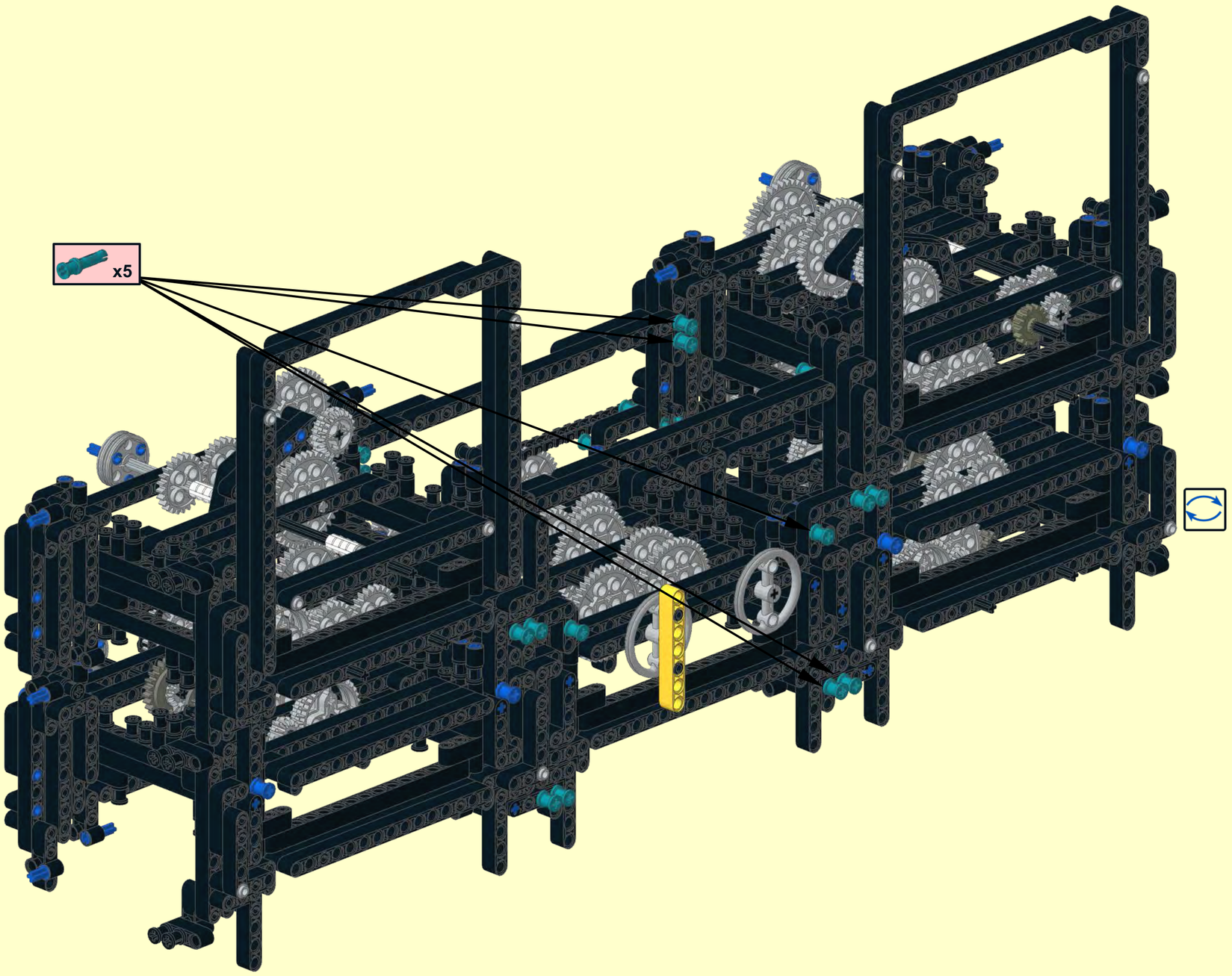

1

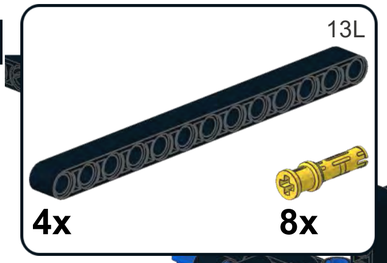


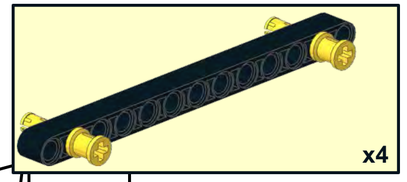

2

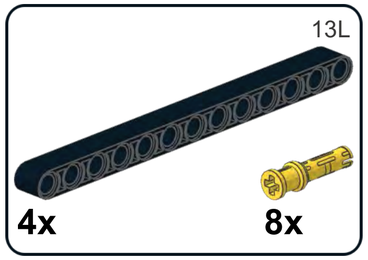


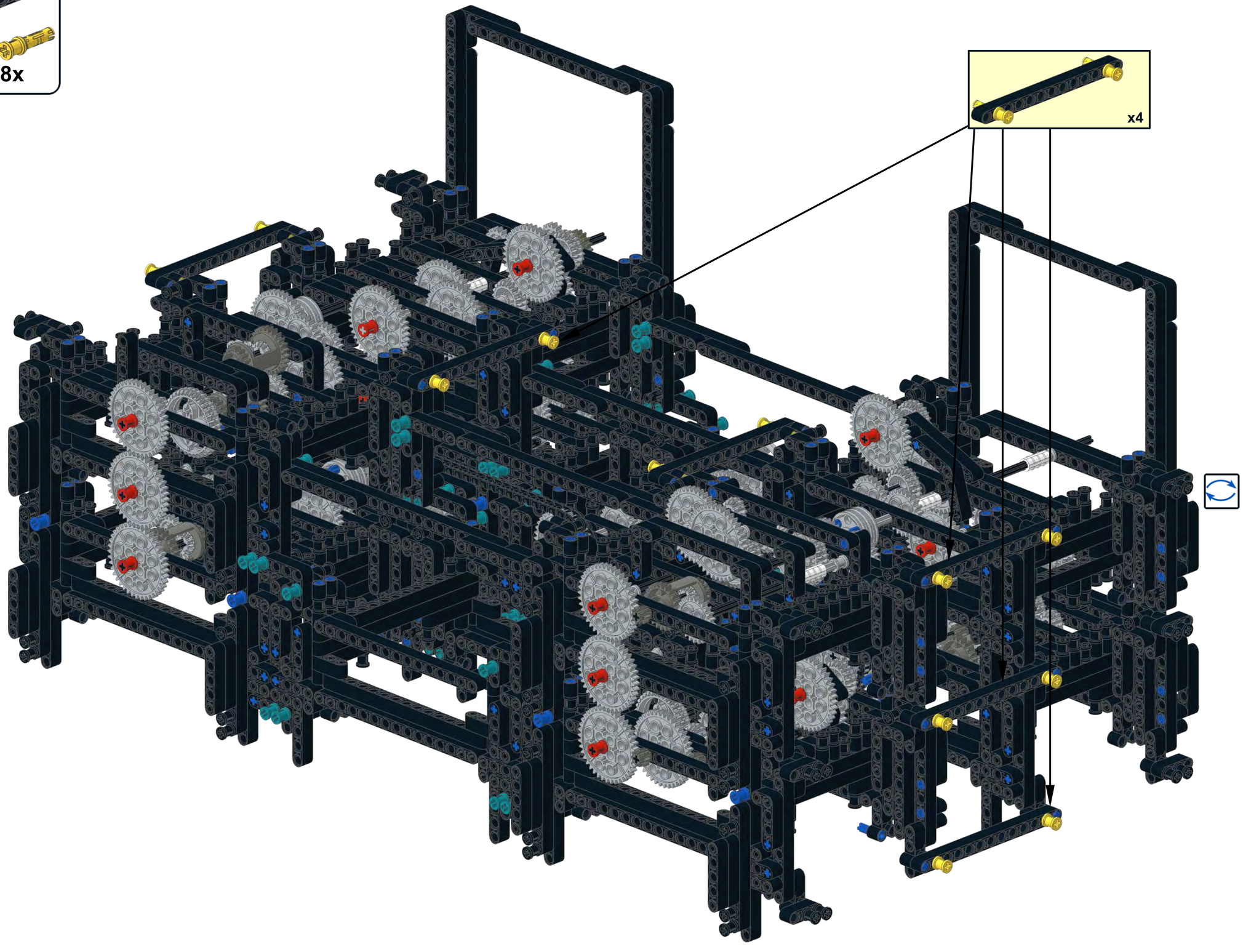

3

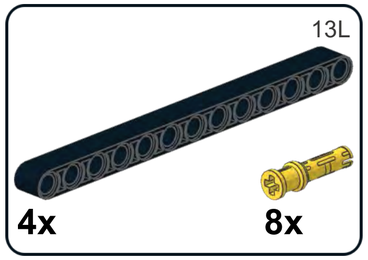


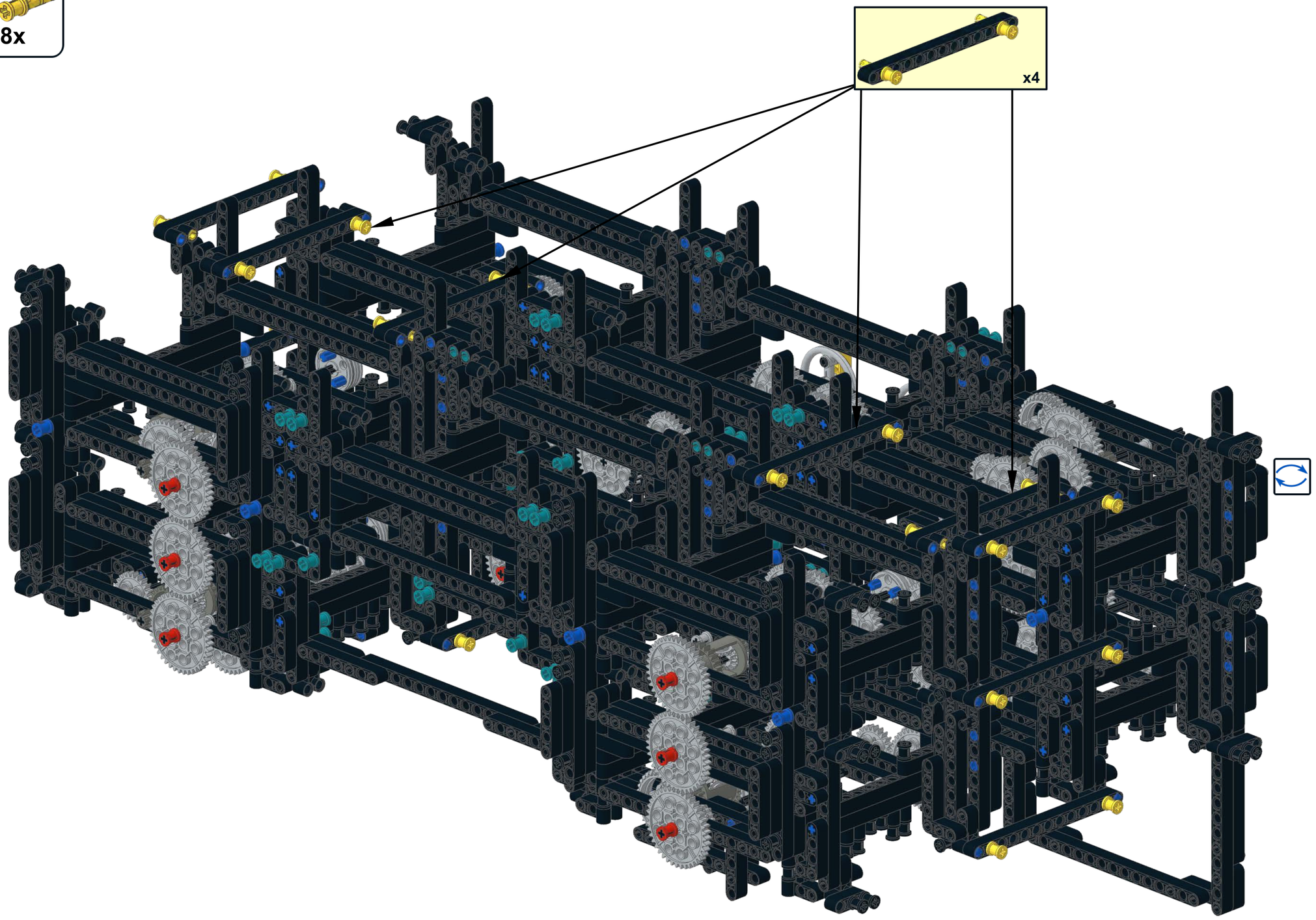

4

5x

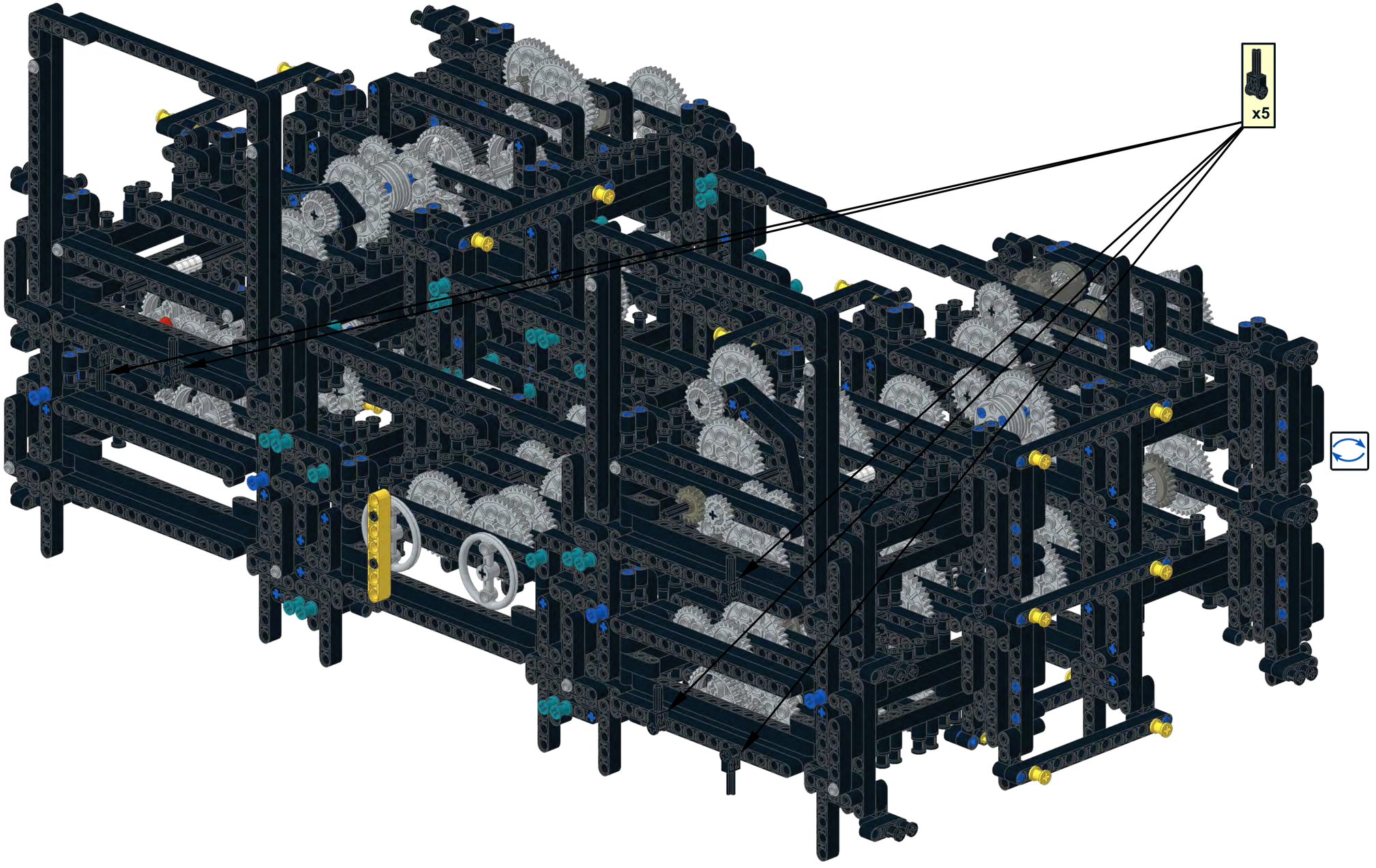

1

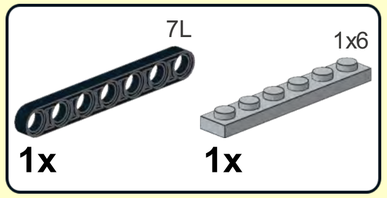


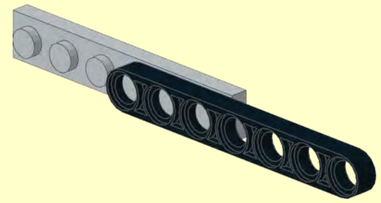

2

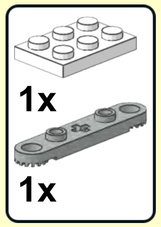


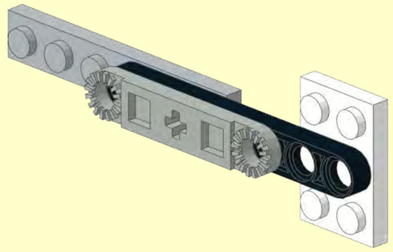

3

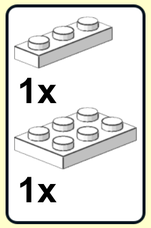


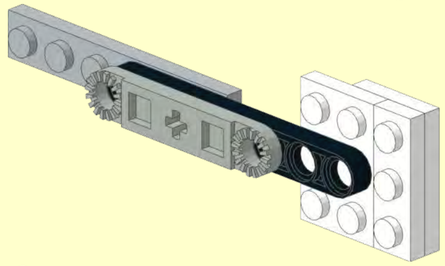

4

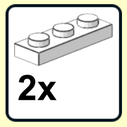


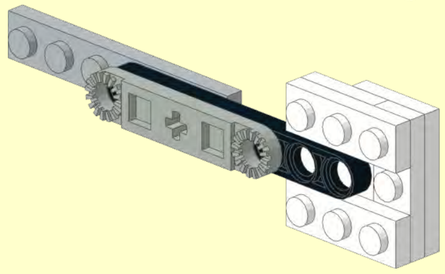

5

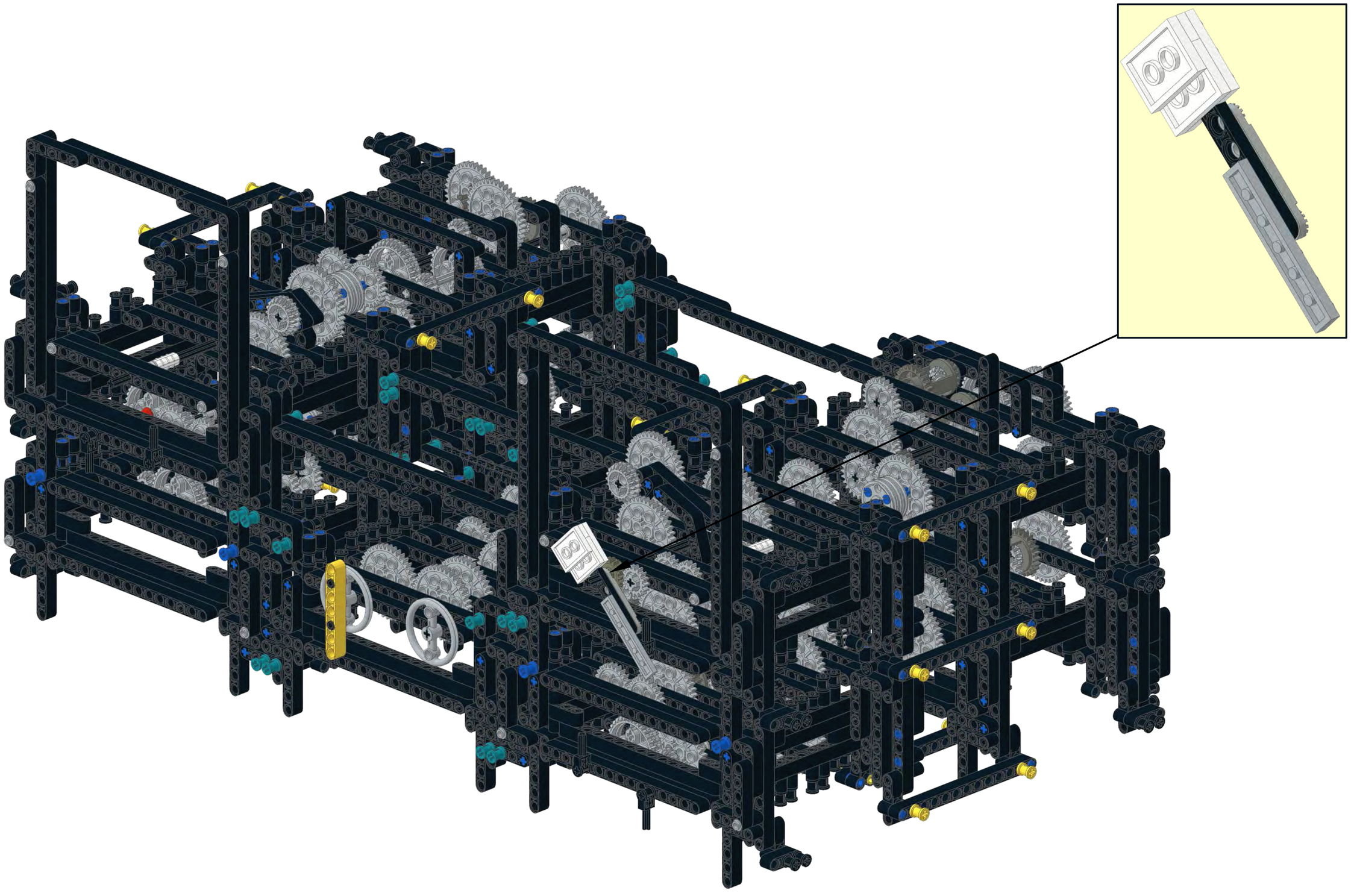

**1**

4L

1x 1x

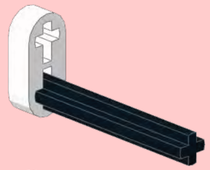

**2**

3L

2x 1x

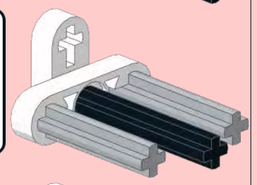

**3**

2L

4x 1x

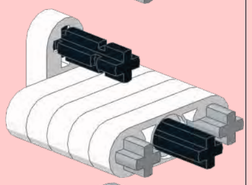

**4**

3L

2x 1x

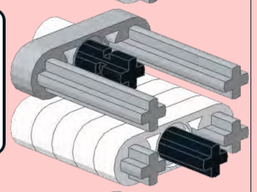

**5**

2x

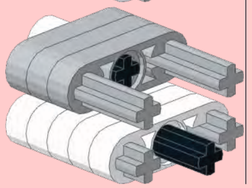

**6**

12L

1x 1x

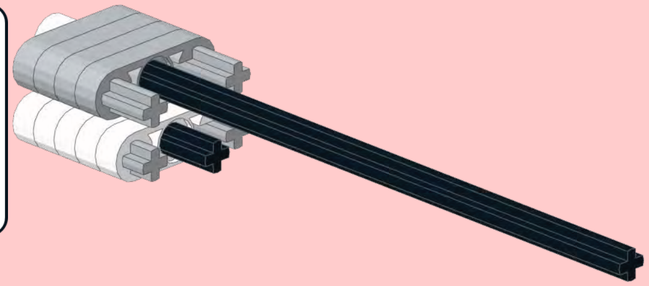

**7**

1x

1x

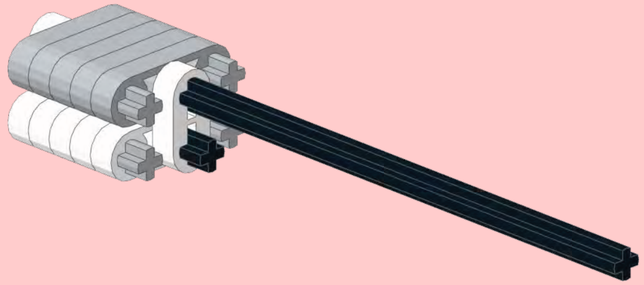

**8**

2x

1x

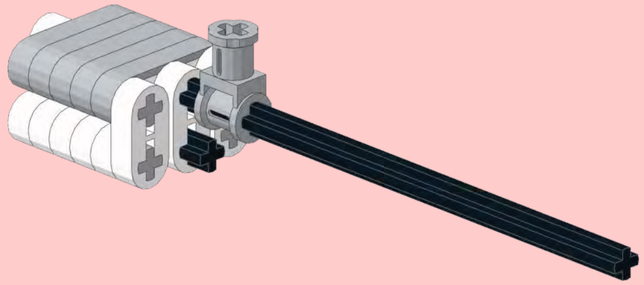

x2

1

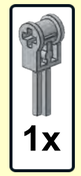


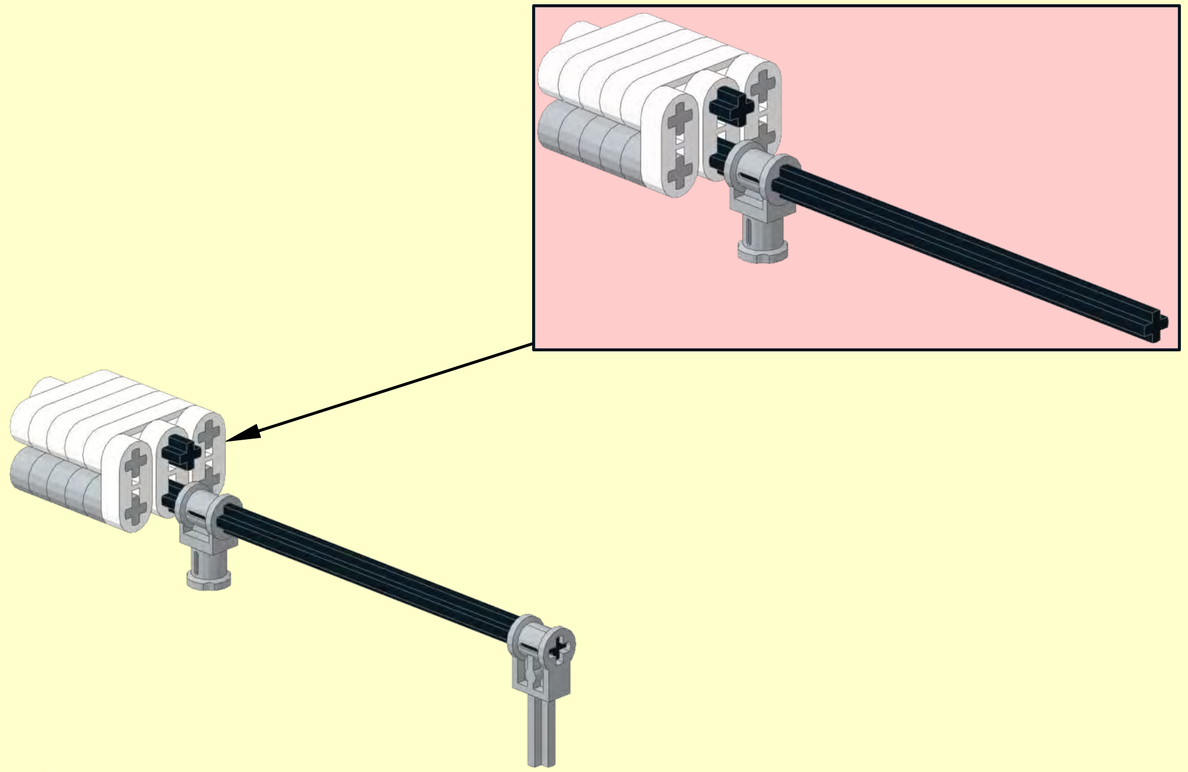

2

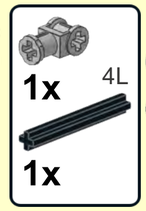


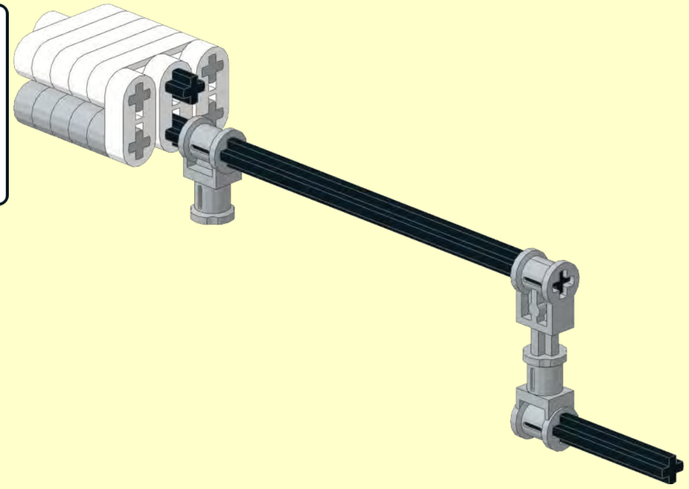

1

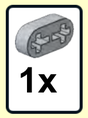


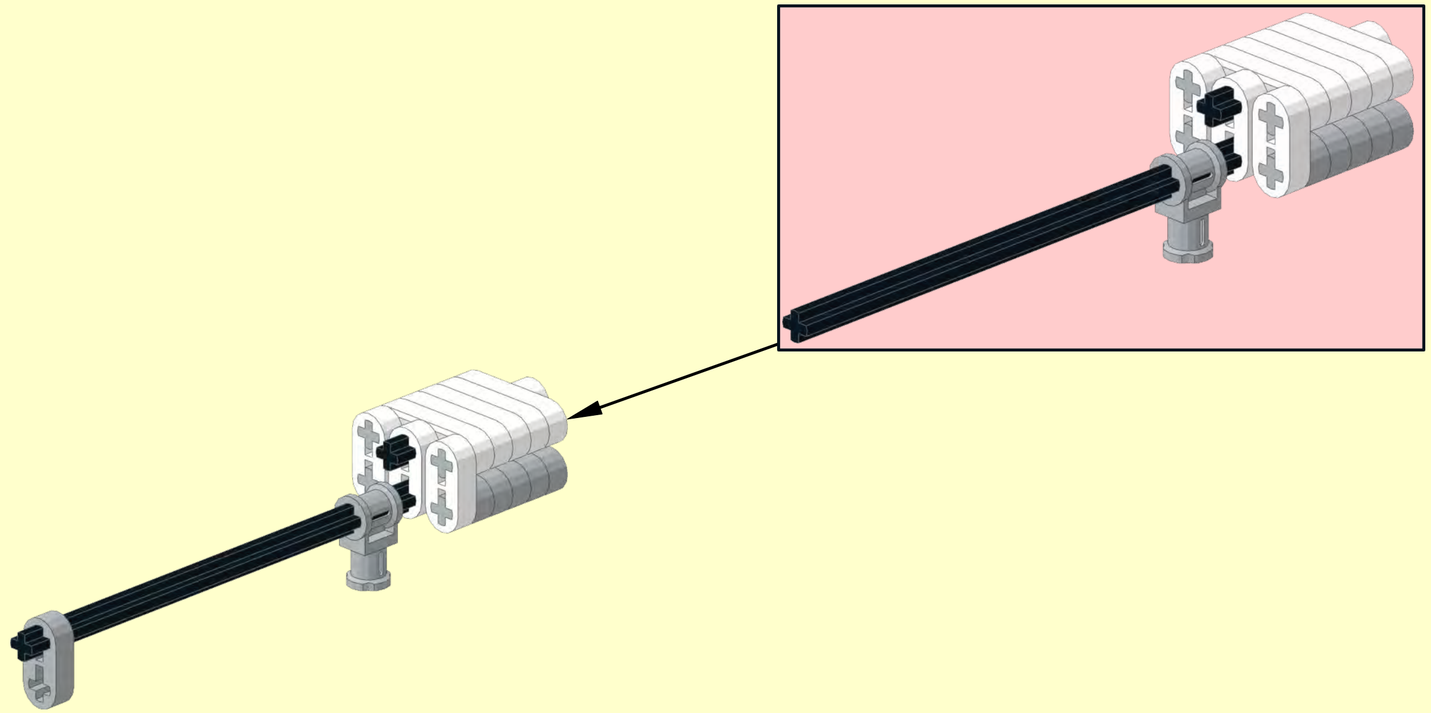

2

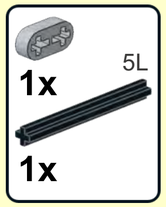


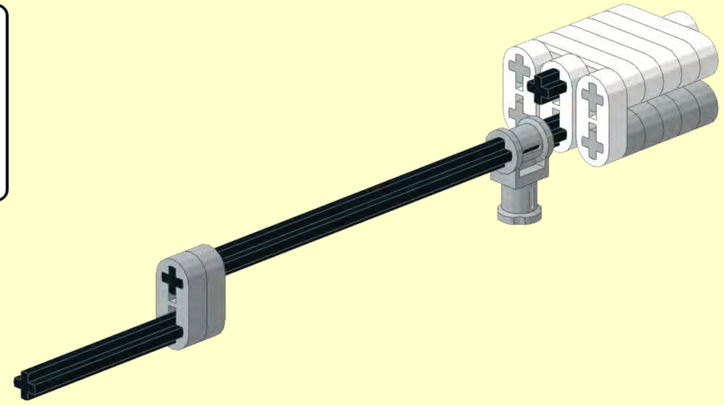

6

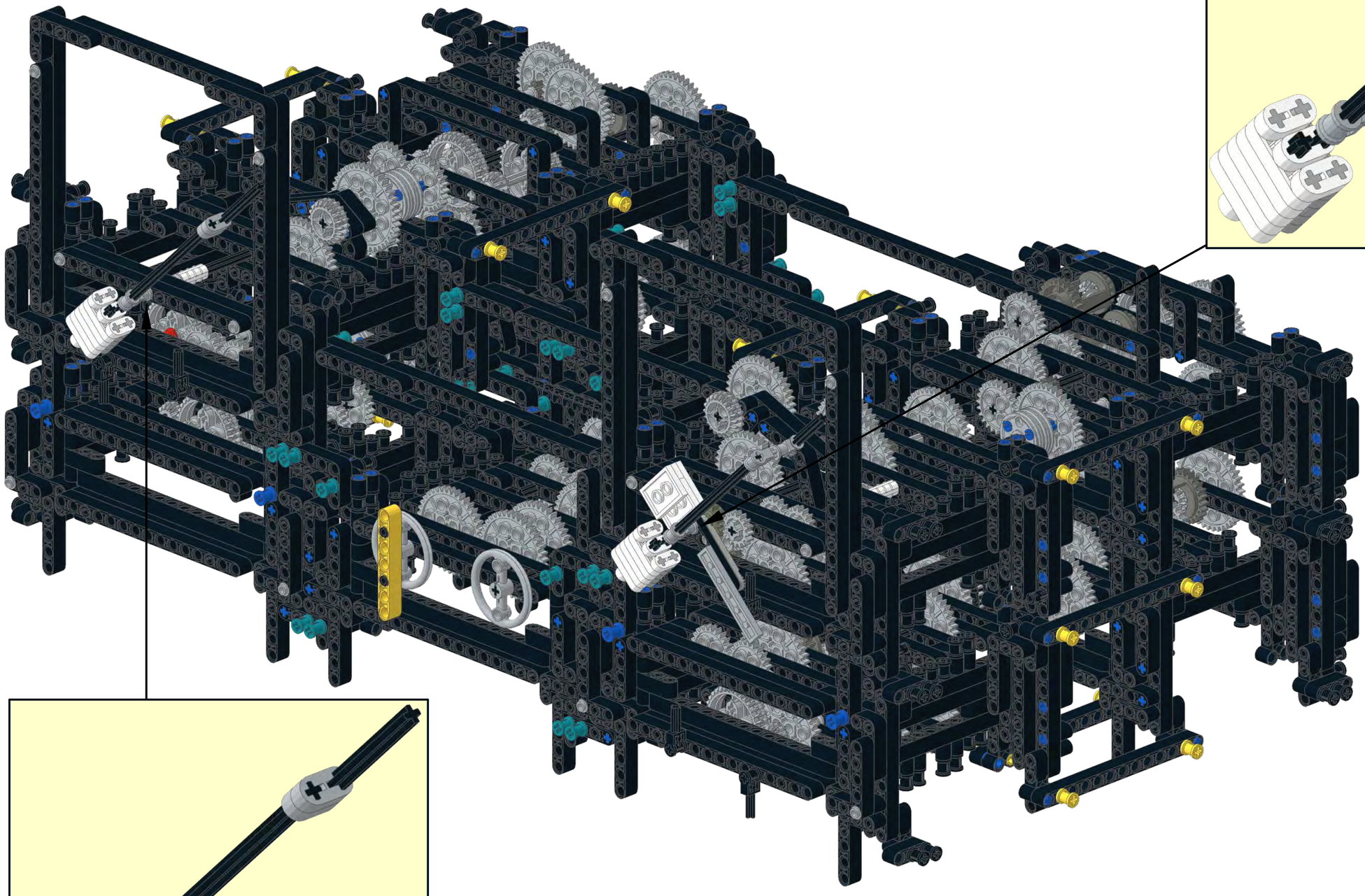

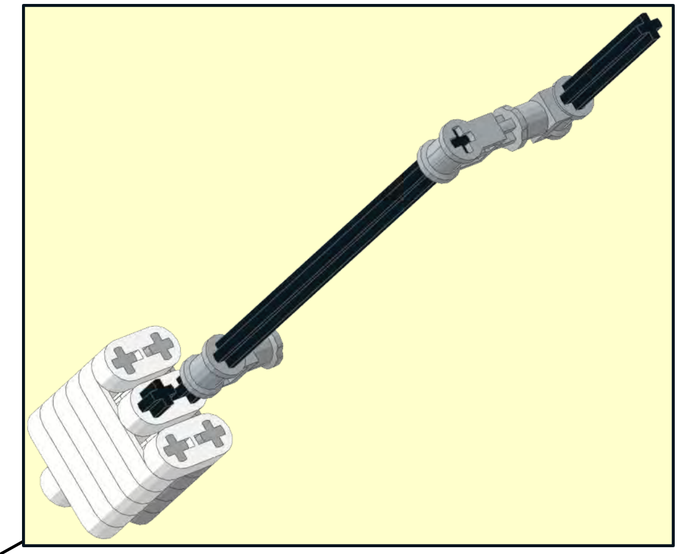

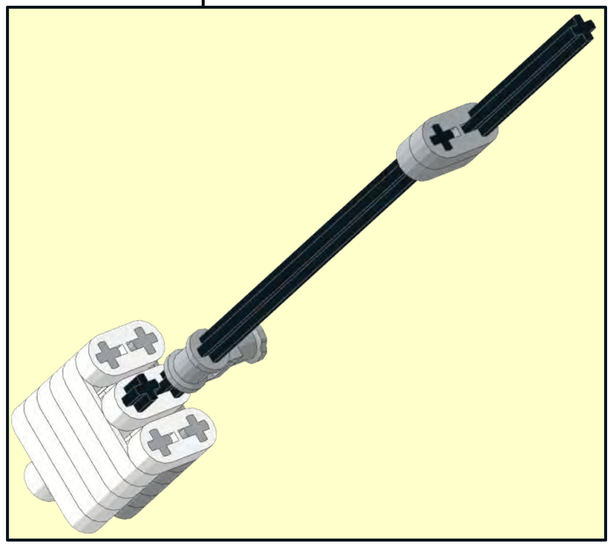

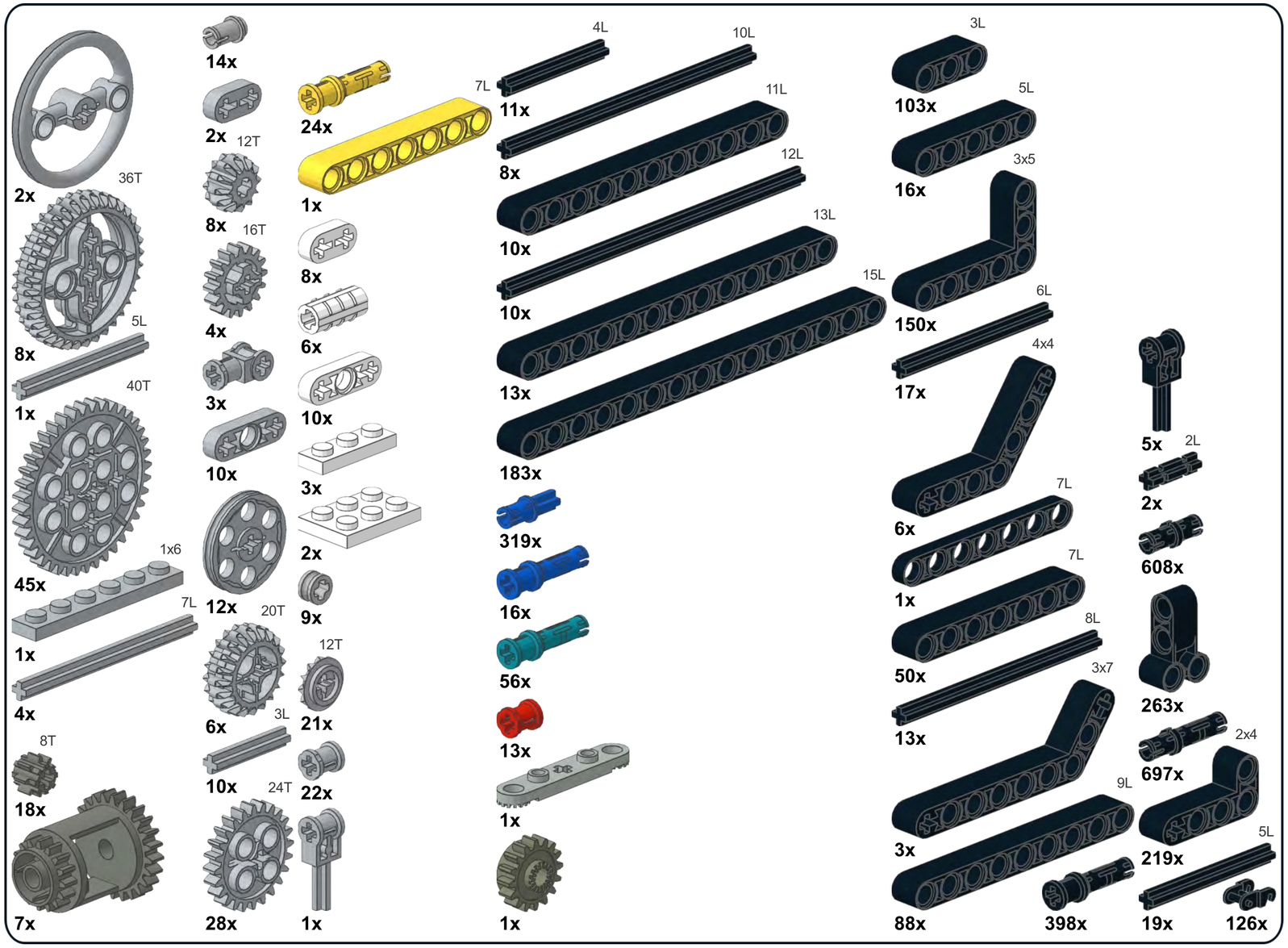
14x
2x
12T
8x
16T
4x
3x
10x
2x
36T
8x
5L
1x
40T
45x
1x6
7L
4x
8T
18x
7x
24x
7L
1x
8x
6x
10x
3x
2x
9x
12T
21x
22x
20T
6x
3L
10x
24T
28x
1x
4L
11x
10L
8x
11L
10x
12L
10x
13L
13x
15L
183x
319x
16x
56x
13x
1x
1x
3L
103x
5L
16x
3x5
150x
6L
17x
4x4
6x
7L
1x
7L
50x
8L
13x
3x7
3x
9L
88x
398x
5x
2L
2x
608x
263x
2x4
697x
5L
19x
126x

https://rebrickable.com/mocs/MOC-1523/WillPilgrim/antikythera-device/#comments

saturner65@gmail.com

LEGO® is a registered trademark of the LEGO Group, which does not sponsor, endorse, or authorize these instructions or the model they depict.